glitzhome®

ASSEMBLY INSTRUCTION

OUTDOOR FOUNTAIN WITH LED LIGHTS & PUMP

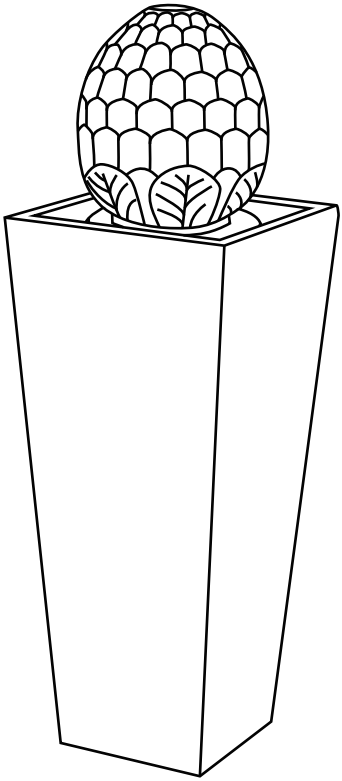

Please carefully unpack and identify each component before beginning assembly. Before you begin, please refer to parts list to make sure that you have all parts. Please take care when assembling the unit and always place the parts on a clean, soft surface. If you require assistance with assembly or parts, please call 888-357-7263.

Get social with us and discover more about our products, tips and exclusive discounts!

PRE-INSTALLATION INSTRUCTIONS

1. Please read through this instruction before attempting to assemble, operate or install.
2. Save all packing materials until assembly is complete to avoid accidentally discarding smaller parts or hardware.
3. Please install the fountain on a flat, level surface close to an electrical outlet.
4. This product is designed for outdoor use, it can be used indoors, however splashing may occur.

SAFETY PRECAUTIONS

WARNING! DO NOT LET CHILDREN PLAY IN OR AROUND THE FOUNTAINS DUE TO THE POSSIBLE RISK OF ACCIDENTAL DROWNING OR ELECTRICAL SHOCK.

1. As with any large container of water, fountains are to be used carefully with adult supervision. They are not intended to be used as “kid pools” and present a risk to small children and infants. Injury or accidental drowning could result. An adult should supervise children when they are around the pump.
2. As with any electrical appliance, make sure the pump plug is dry before you plug it into an outlet, and make sure you are not standing in the water - electrical shock could result.
3. Filled fountain weighs a considerable amount. Make sure your set-up area can support at least 300 lbs.
4. Excessive weight or pressure on any of the fountain sections may cause it to tip or fall over. Keep pets and children away from any of the fountain sections.
5. For fountains, it is normal for some splashing to occur. Protect surrounding surfaces as needed.
6. The pump on the fountain has no user serviceable parts. Only an authorized service representative should service the pump. Do not open the sealed pump housing as this may result in electrical shock. Refer to enclosed pump maintenance guide for cleaning.
7. Always unplug the pump from the electric outlet before cleaning and handling.
8. Use with clean water only. Do not place it in other liquids. Do not allow the pump to run dry.
9. Use the proper power source as indicated on the pump label.
10. Equip the electrical power for the pump with a ground fault circuit interrupter (GFCI).

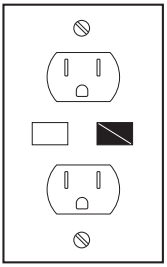

GFCI

11. The fountains are not manufactured to withstand extreme temperatures. Improper storage that allows water to freeze within a product may cause damage.
12. Keep the fountain away from high temperatures or heat sources.
13. Do not use the pump in water above 86°F (30℃).
14. Disconnect the power cord from the outlet by holding the plug. Do not lift, carry, or pull the pump by the power cord.
15. If the entire fountain falls into the water accidentally, turn off the circuit breaker immediately.
16. If any leakage occurs around the pump housing, turn off the circuit breaker immediately and have the pump serviced by a registered technician.
17. Do not operate the fountain if the pump has been dropped or has a damaged power cord or plug. Do not replace the power cord.
18. Keep the plug dry. Do not expose the plug to water or steam. Do not use the pump in swimming pool or marine area.
19. If the plug or the wall receptacle gets wet due to water dripping down the power cord or for any other reason, do not remove the plug from the wall outlet until the circuit breaker is turned off.
20. Do not expose the pump to direct sunlight or to low temperatures for any period of time.
21. Use only a UL-approved extension cord of the correct rating to avoid overheating.
22. Do not use attachments that are not provided by the manufacturer since they may cause an unsafe condition.
23. Do not use the pump for anything other than its intended use.

PARTS LIST

Top Artichoke (A) Qty: 1	Fountain Base (B) 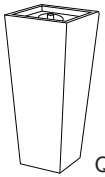 Qty: 1	Pump Cord (C) 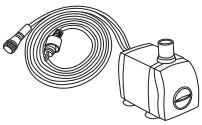 Qty: 1	Power Plug (D) 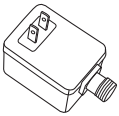 Qty: 1
Pebble (E) Qty: 1			

STEP-BY-STEP ASSEMBLY

PLEASE CAREFULLY UNPACK AND IDENTIFY EACH COMPONENT BEFORE BEGINNING ASSEMBLY. BEFORE YOU BEGIN, PLEASE REFER TO PARTS LIST TO MAKE SURE THAT YOU HAVE ALL PARTS.

STEP 1

Place the Fountain Base (B) on a flat, level surface close to an electrical outlet. Allow enough space to access the pump.

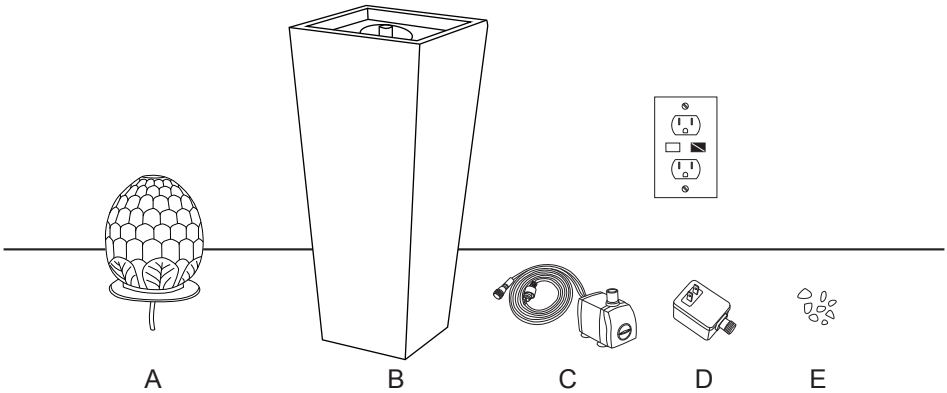

STEP 2

Remove the Pump Cord (C) from the packaging and adjust the water flow control to the lowest setting to avoid splashing until the fountain is completely assembled.

WATER FLOW RATE CONTROL: The water flow rate can be increased (+) or decreased (-) by moving the flow rate control on the pump body, adjust the pump flow rate to achieve the desired effect.

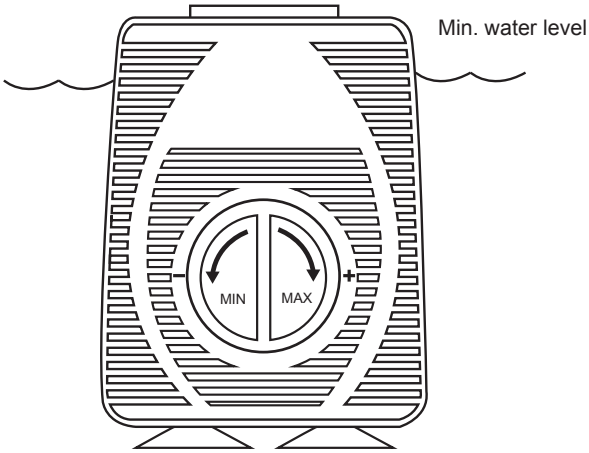

Flow rate control

STEP 3

Make the long cord from the Pump Cord (C) out through the bottom of the Fountain Base (B).

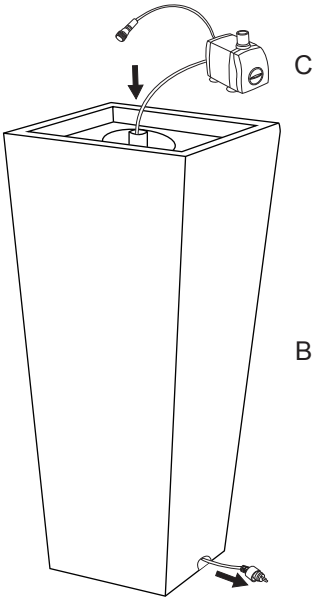

STEP 4

Connect the water hose preassembled inside of the Top Artichoke (A) into the Pump (C). Please keep the pump still out.

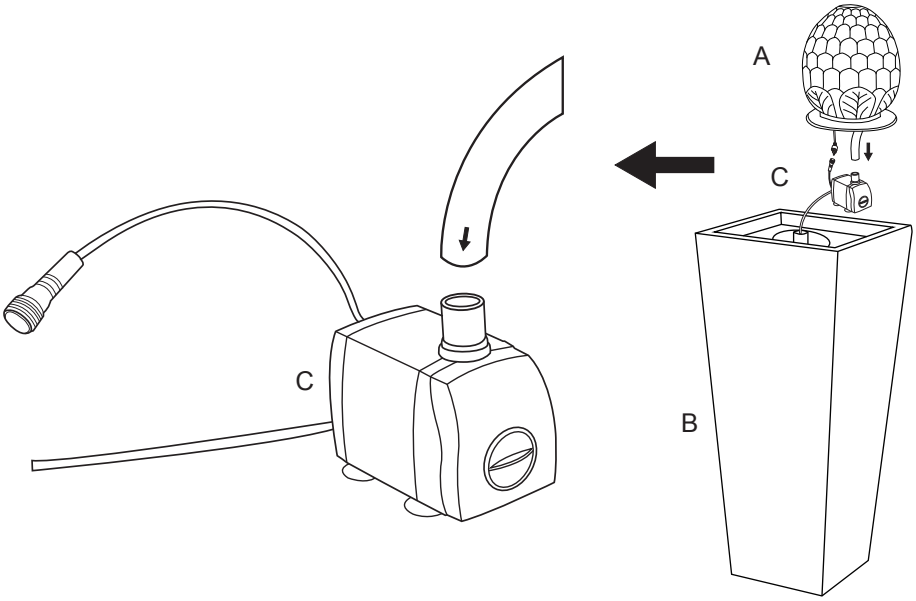

STEP 5 Connect the light cord preassembled inside of the Top Artichoke (A) to the branch cord from the Pump (C). Tighten the connector by twisting clockwise, then place the Pump (C) into the reservoir at the top of the Fountain Base (B).

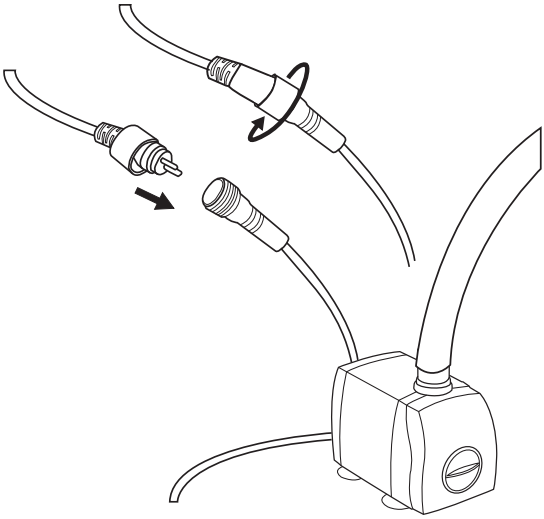

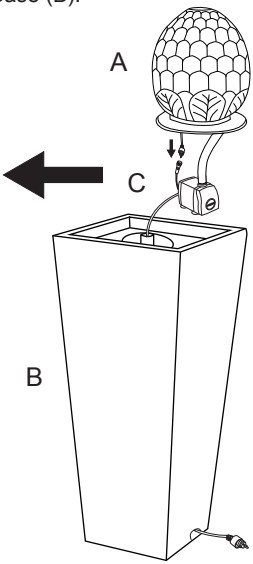

STEP 6 Put the Top Artichoke (A) onto the Fountain Base (B).

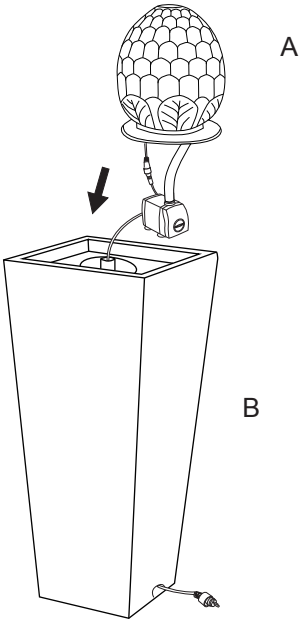

STEP 7

Connect the long cord from the Pump (C) to the Power Plug (D). Tighten the connector by twisting clockwise and keep the power plug sit outside.

NOTE: Please double check all connecters to make sure they are tightened.

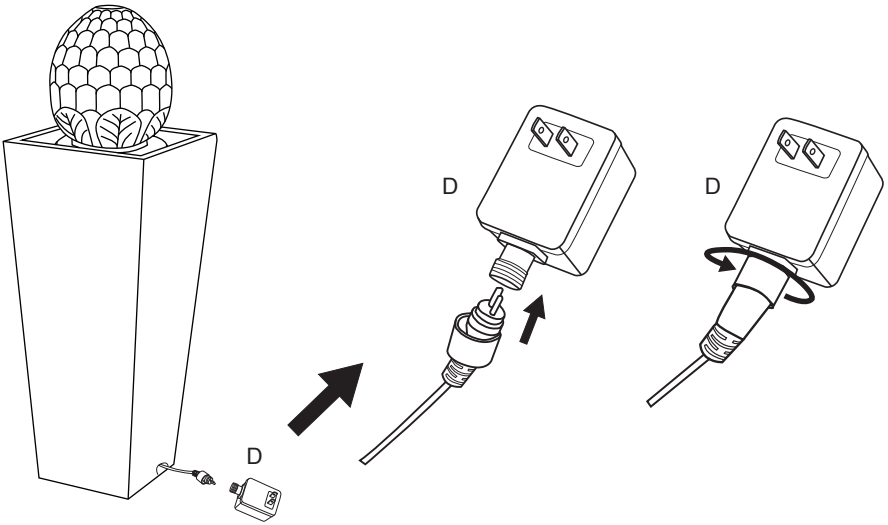

STEP 8

Gently pour water into the fountain basin, make sure the water completely submerges the Pump (C).

NOTE: For the first-time you operate the pump, it normally needs about 1-2 minutes for the air to be completely expelled to make sure the water begins to flow.

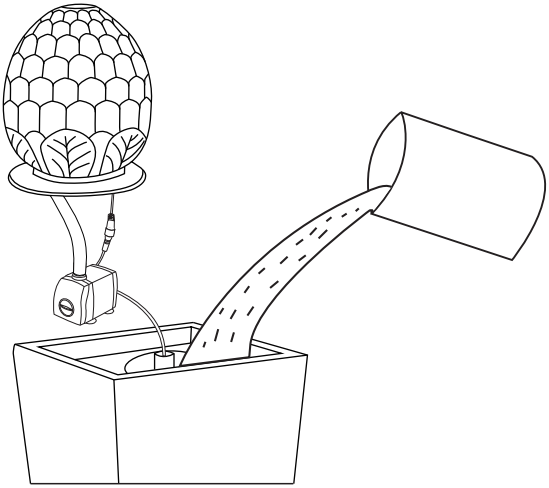

STEP 9 Place Pebbles (E) around the Top Artichoke (A).

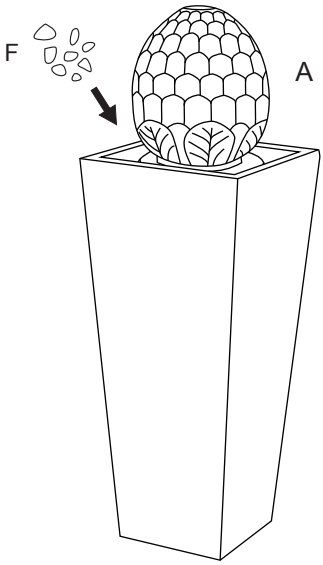

STEP 10 Connect the Power Plug (D) into your local power supply.

NOTES:
1. Make sure there is no water on the power plug.
2. Allow the pump power cord to hang at a lower level than the wall outlet to form a “drip loop.” This will help to prevent water from dripping down the power cord and getting into the wall outlet.

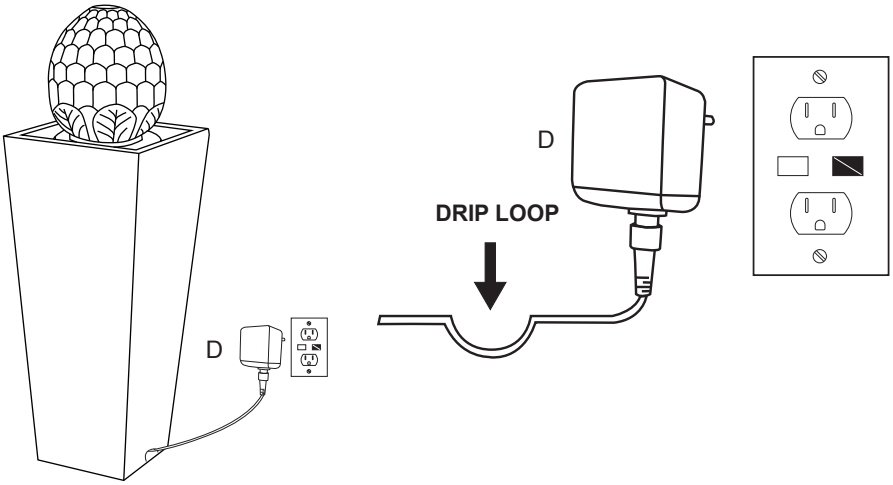

STEP 11 Once set up, you can adjust the pump water flow rate control to achieve the desired effect (see step 2 for adjustment) and enjoy your new fountain.

NOTES: Don't forget to add water regularly as water will evaporate over time.

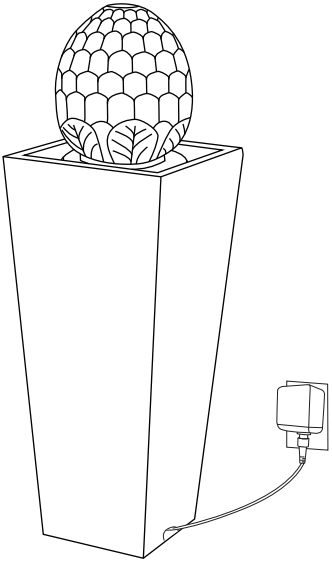

PUMP SAFETY & TROUBLESHOOTING

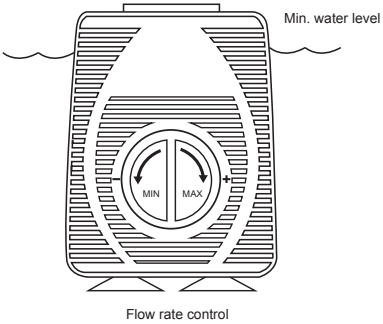

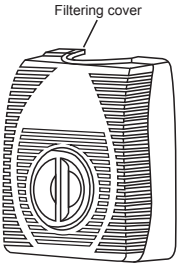

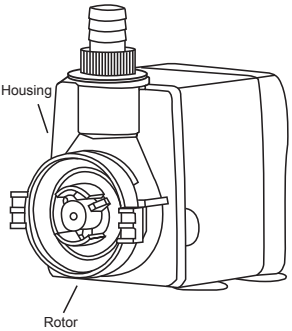

CARE AND MAINTANCE

1. Check regularly that the water reservoir has sufficient water to always cover the pump. It will be necessary to check more frequently in warm or windy weather.
2. Do not allow the pump to freeze. During cold spells, remove the pump from the water feature and place in a water-filled container in a frost-free position. DO NOT store the pump dry.

3. Periodically it will be necessary to change the water and clean the water feature and reservoir. The frequency of this will depend on the weather and location of the water feature. The outside of the water feature can be cleaned using a soft cloth and clean water and the reservoir with a soft brush. A mild detergent can be used, but please note this will cause the water to foam and should be avoided unless strictly necessary.
4. The pump rotor will require cleaning at approximately monthly intervals. A good indication will be if the water flow rate drops. Unplug the water feature, remove the pump from the water reservoir and disconnect the water pipe. Remove the filtering cover and pressure-casing from the front of pump body. Clean the rotor and housing in clean water using cotton buds. Reassemble the pump, reconnect the water pipe and reassemble the water feature.

TROUBLE SHOOTING

1.If the pump fails to run:

POSSIBLE CAUSE	CORRECTIVE ACTION
a) Pump is not covered with water.	Add more water to the reservoir.
b) Pump or fountain is blocked.	Disconnect fountain from power source, remove any obstruction, and clean bowl and tubing.
c) Pump is not secured correctly	Disconnect fountain from power source, pour out any remaining water, and ensure the tubing in the reservoir is tightly secured to the pump outlet.
d) Pump is not electrically connected	Check to make sure pump is plugged in and the outlet is working.
e) Pump may be “air locked.”	Plug and unplug the pump several times to clear any air that may have been trapped.

2.If the pump “spews” or “burp”:

POSSIBLE CAUSE	CORRECTIVE ACTION
There is not enough water in the basin to operate your fountain.	Check the water level to make sure the pump is completely submerged, add enough water to reservoir.

3.If abnormal loud noise is heard during operation:

CORRECTIVE ACTION
a) Disconnect the power supply and then remove the pump front cover and impeller cover.
b) Use hand to grip the impeller, gently pull the impeller/rotor assembly out of the pump housing.
c) Rinse the impeller/rotor assembly and the cavity with clean water. If breakage or surface damage is found in the assembly contact your local retailer or our customer service for a part replacement.

glitzhome®

Glitzhome ,LLC.

Toll free 888-357-7263

customerservice@glitzhome.com