PPSTN051B704/PPSTN051B714/PPSTN051B1024

Upholstered Bed
Full

Weight Limit:
Bed:800LBS / 363KG

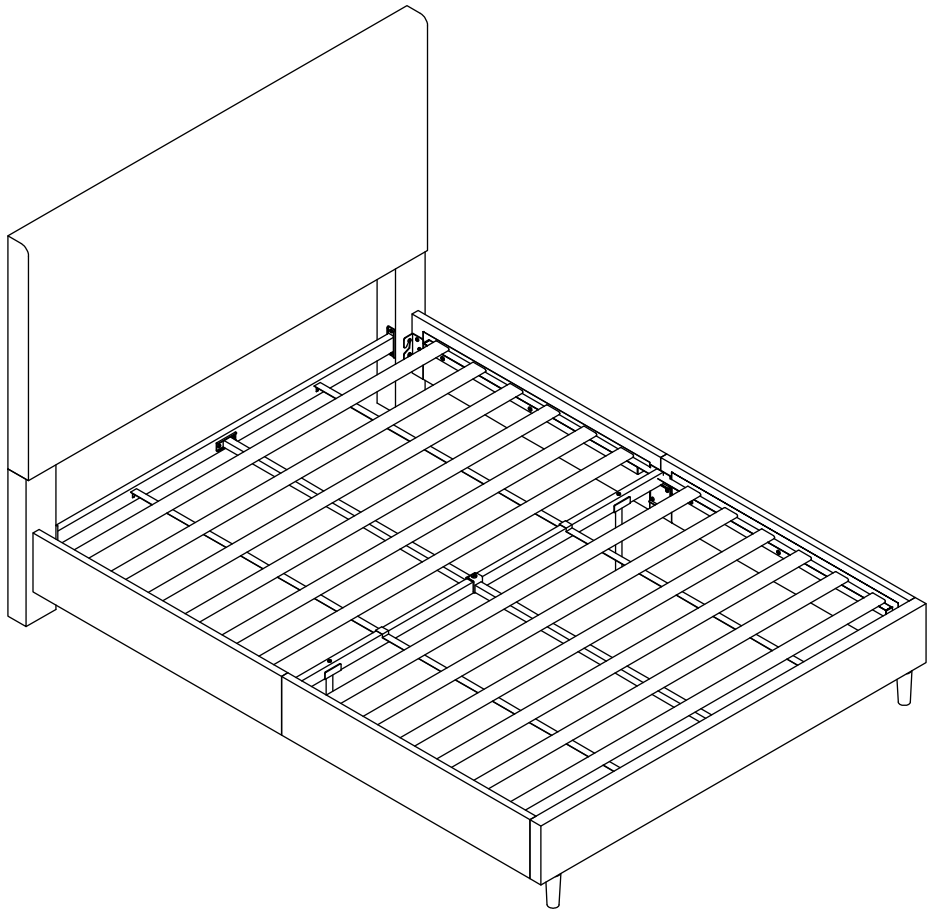

Version：2026/10/29

PARTS

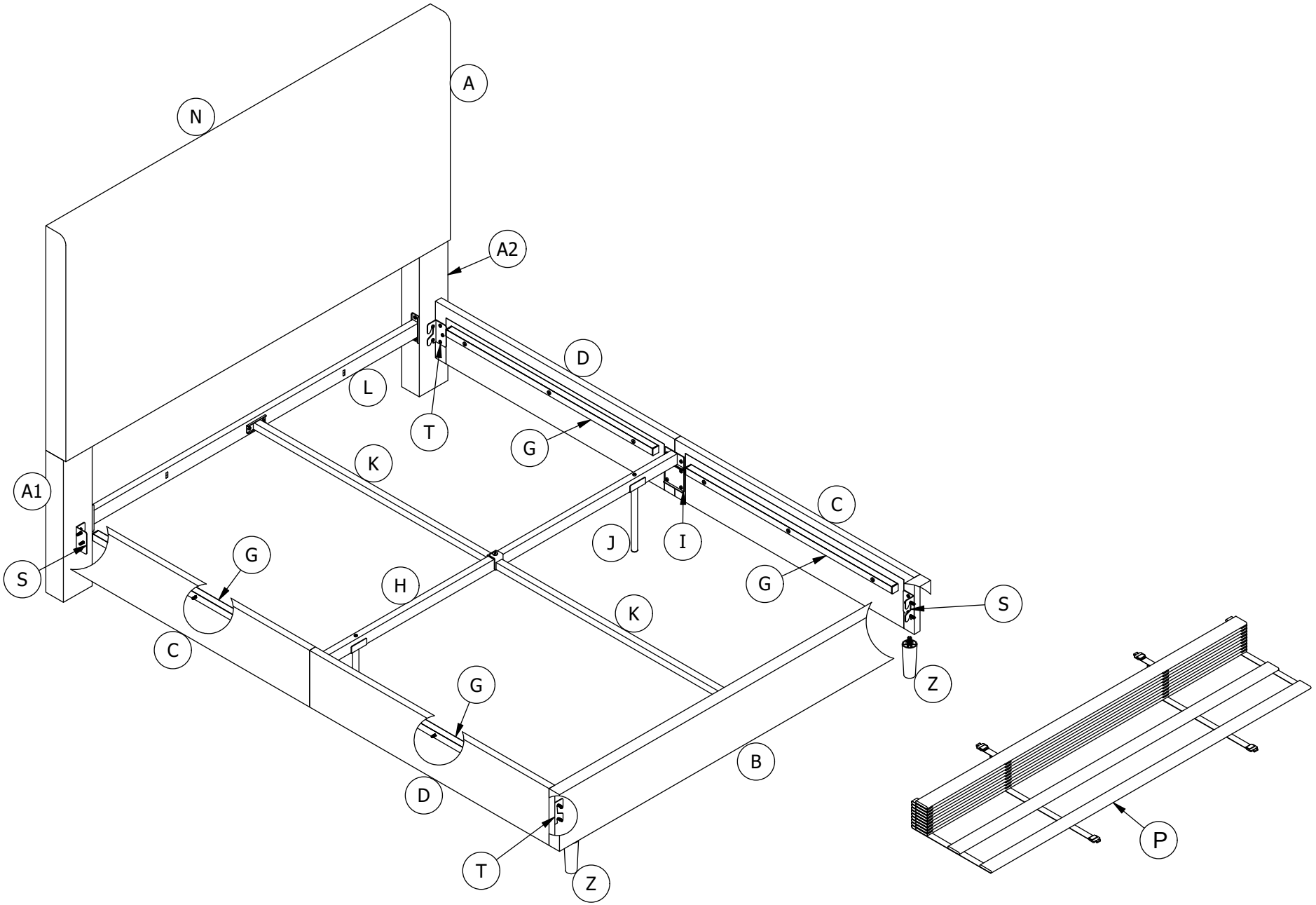

PARTS LIST

A 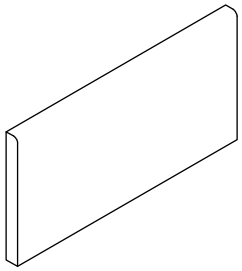	B 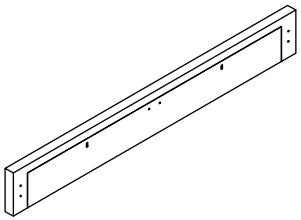	C 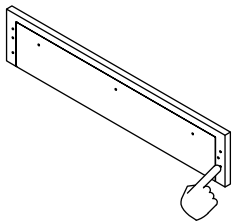	D 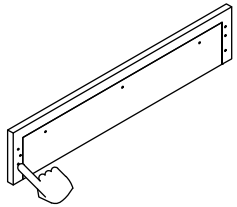	G 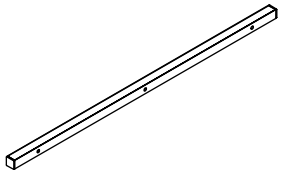
Headboard 1 PC	Footboard 1 PC	Side Panel 2 PCS	Side Panel 2 PCS	Side Rail 4 PCS
H 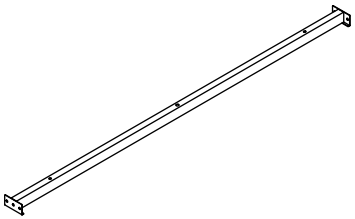	J 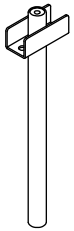	K 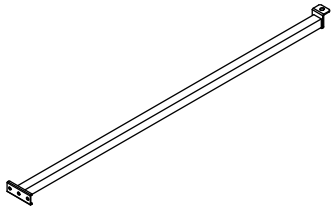		
Cross Brace 1 PC	Support Leg 2 PCS	Center Rail 2 PCS		

PARTS LIST

P 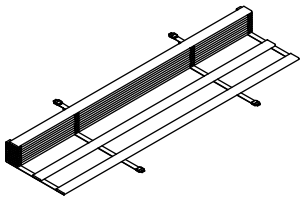	S 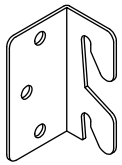	T 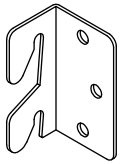	N 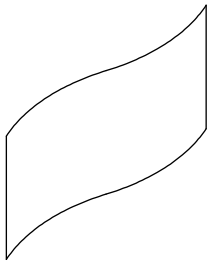	L 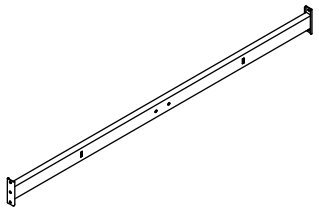
Wooden Slats 1 PC	Bracket 2 PCS	Bracket 2 PCS	Back Cover 1 PC	End Rail 1 PC
A1 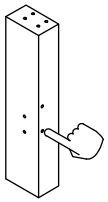	A2 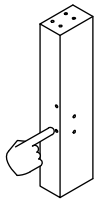	I 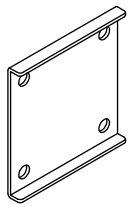	Z 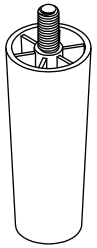	
Side Leg 1 PC	Side Leg 1 PC	Connector 2 PCS	Plastic Leg 2 PCS	

HARDWARE LIST

1 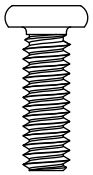	2 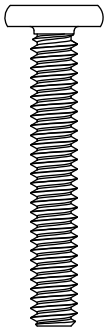	3 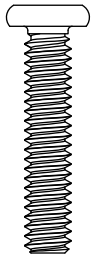	4 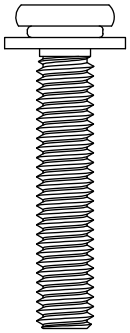	5 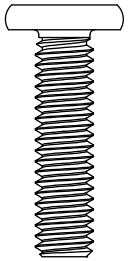
1/4" X 3/4"	1/4" X 1 9/16"	1/4" X 1 3/16"	5/16" X 1 9/16"	5/16" X 1 3/16"
Bolt X 38	Bolt X 12	Bolt X 8	Bolt X 8	Bolt X 1
6 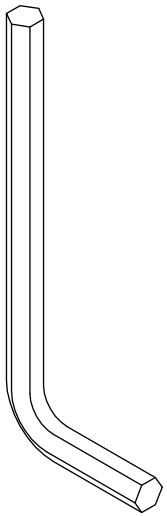	7 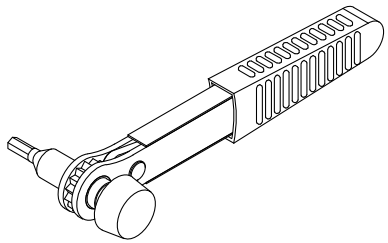			
4mm Allen Key X 1	4mm Ratchet Wrench X 1			

How To Use The Ratchet

1. Before assembling the furniture, please adjust the lock tool as needed.

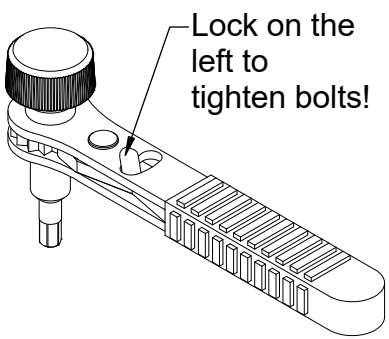

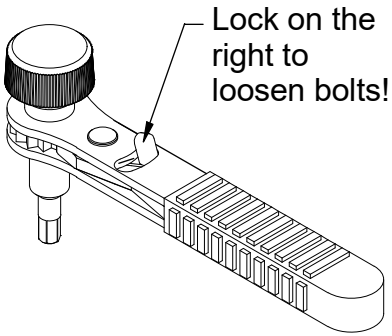

2. Tighten or loosen the bolts

- **Tighten bolts :** Locate the turncap (picture) and rotate it clockwise to screw the bolt quickly, until it cannot be rotated any more. Then start rotating with the handle clockwise to finalize tightening the bolts.

- **Loosen bolts :** Rotate the handle counterclockwise to loosen the bolt. Then, to completely remove the bolts, continue rotating with the turncap in the same direction.

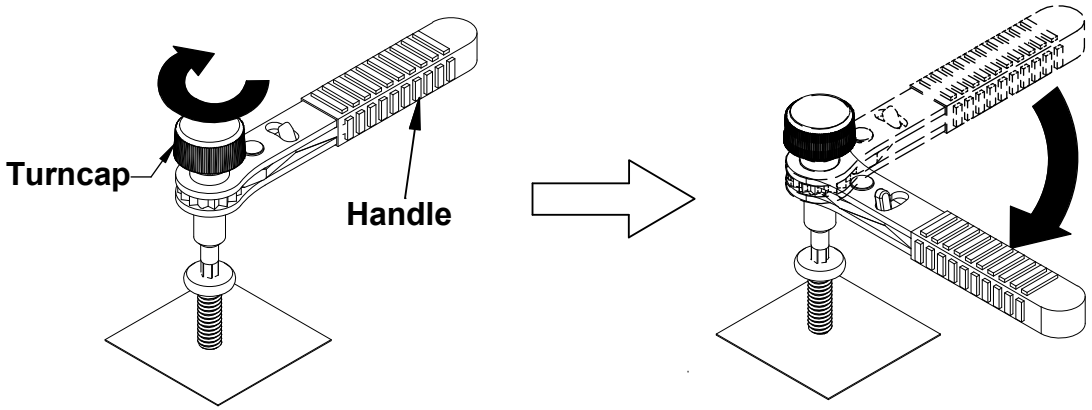

Helpful Hints

- Before assembling the furniture, please read the instructions on how to use ratchet, it will help you to assemble the furniture quickly.
- Please don't throw away the ratchet in case you may need to use in future.

Step 1

Attach **A1** & **A2** to **A** with ❹.

⚠ **Don't fully tighten the bolts until step 2 finished. This will help your assembly in next step.**

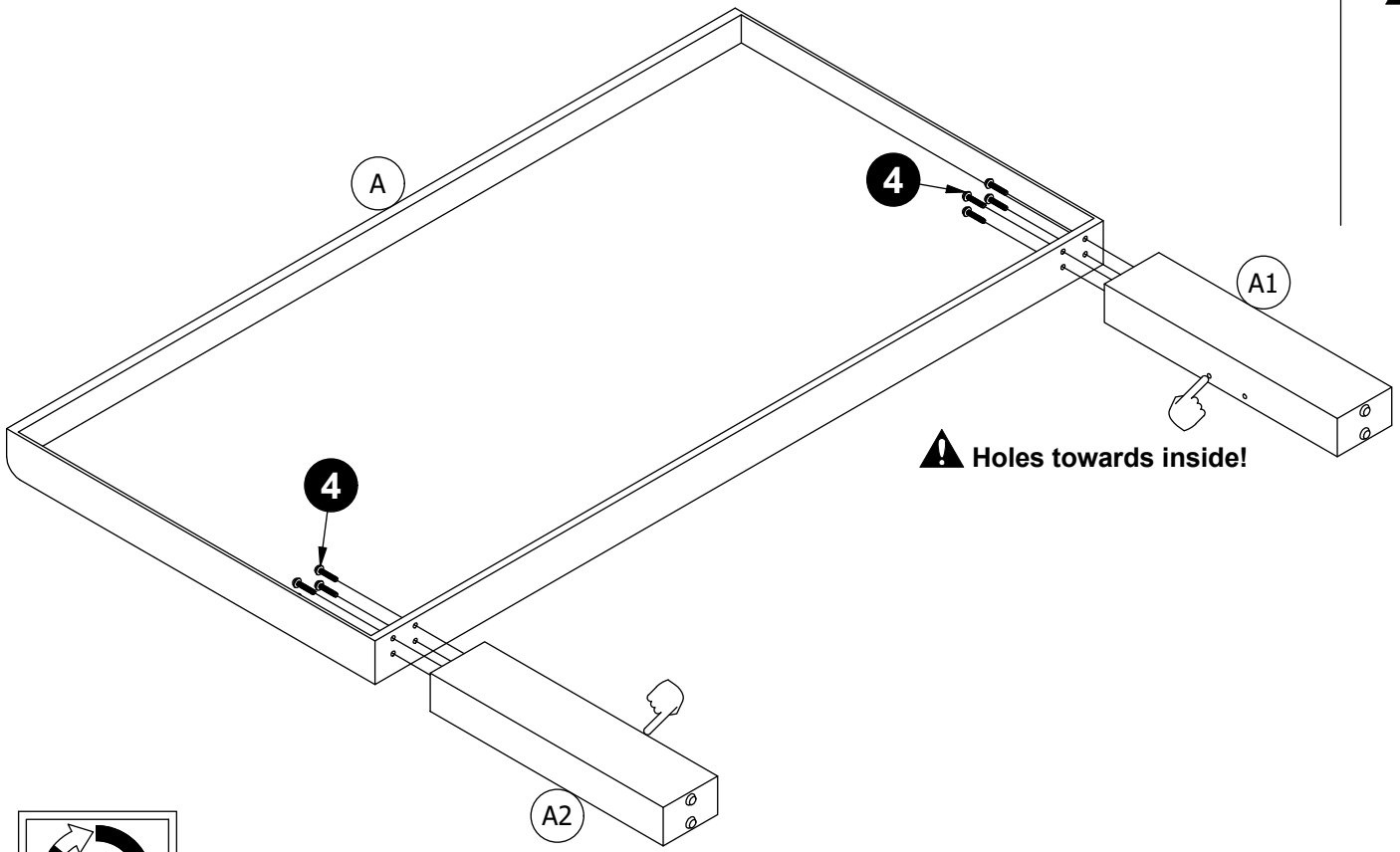

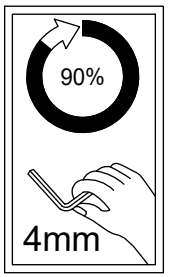

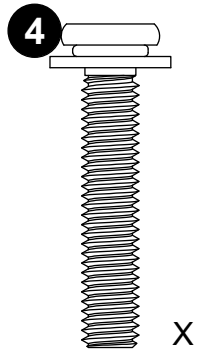

X 8

Step 2

2.1 Attach **L** to **A1** and **A2** with ❸; then tighten the bolts.
2.2 Screw ❸ into **A1** & **A2** with half of the threads exposed as illustrated.

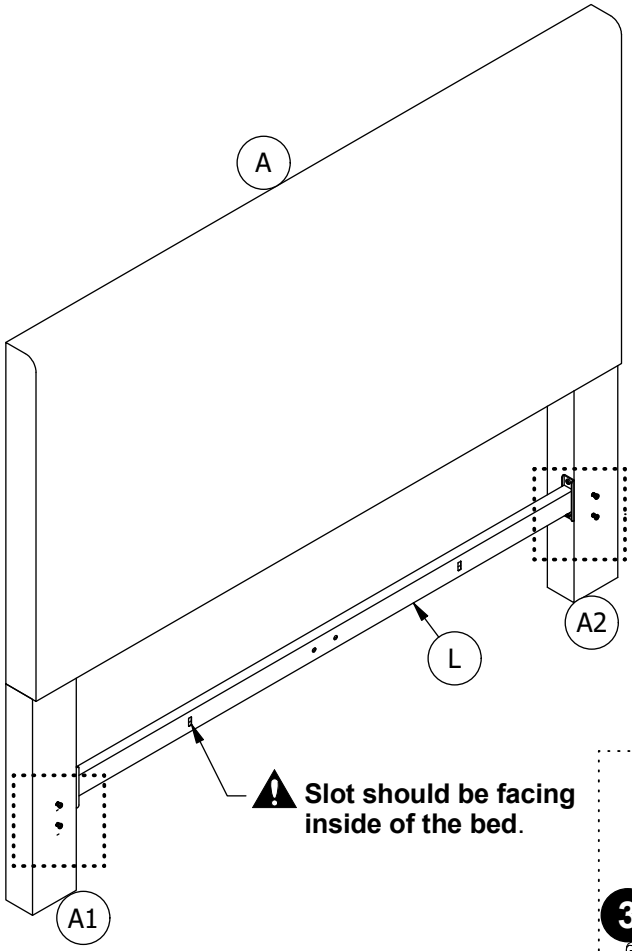

Slot should be facing inside of the bed.

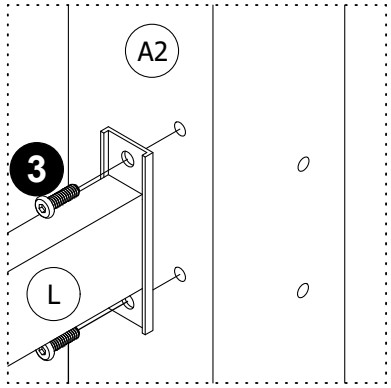

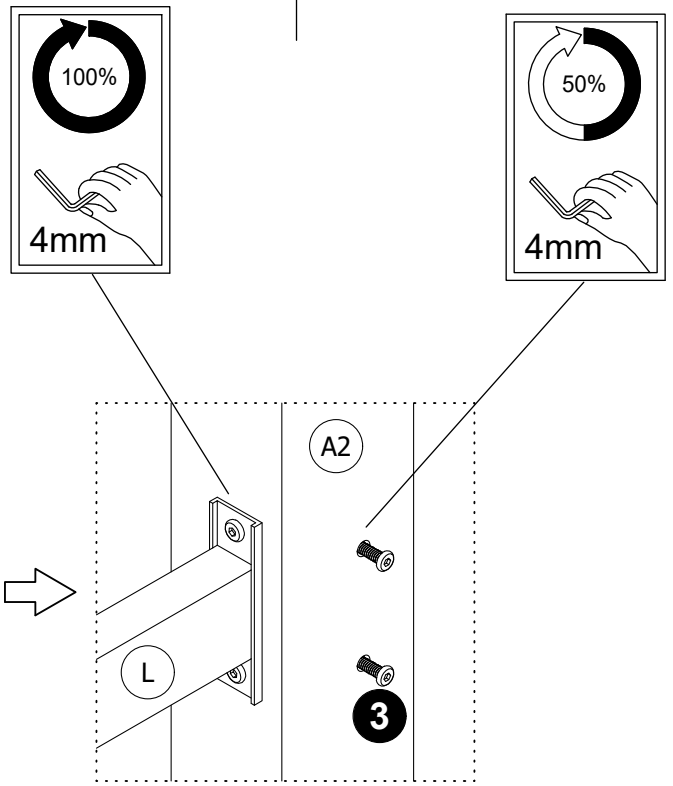

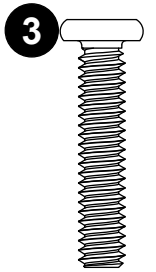

X 8

Step 3

3.1 Attach **I** to **C & D** with ❶.
3.2 Attach **T** to **D** with ❶.
3.3 Attach **S** to **C** with ❶.

⚠ **Fully tighten all bolts in this step.**

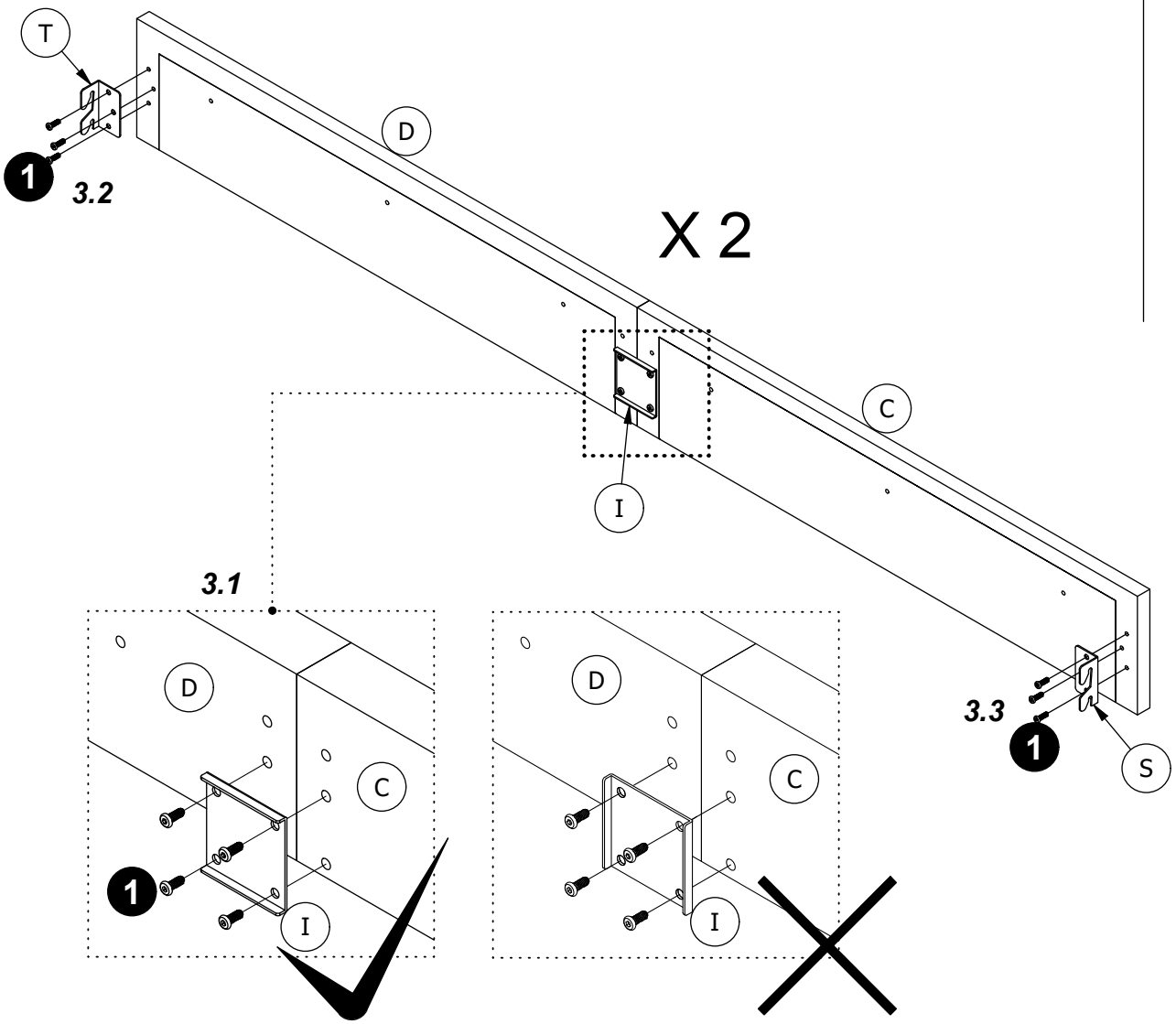

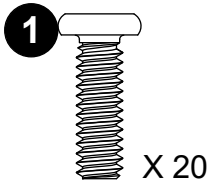

Step 4

Attach **Z** x 2 to **B**.

Screw ❶ into **B** with half of the threads exposed as illustrated.

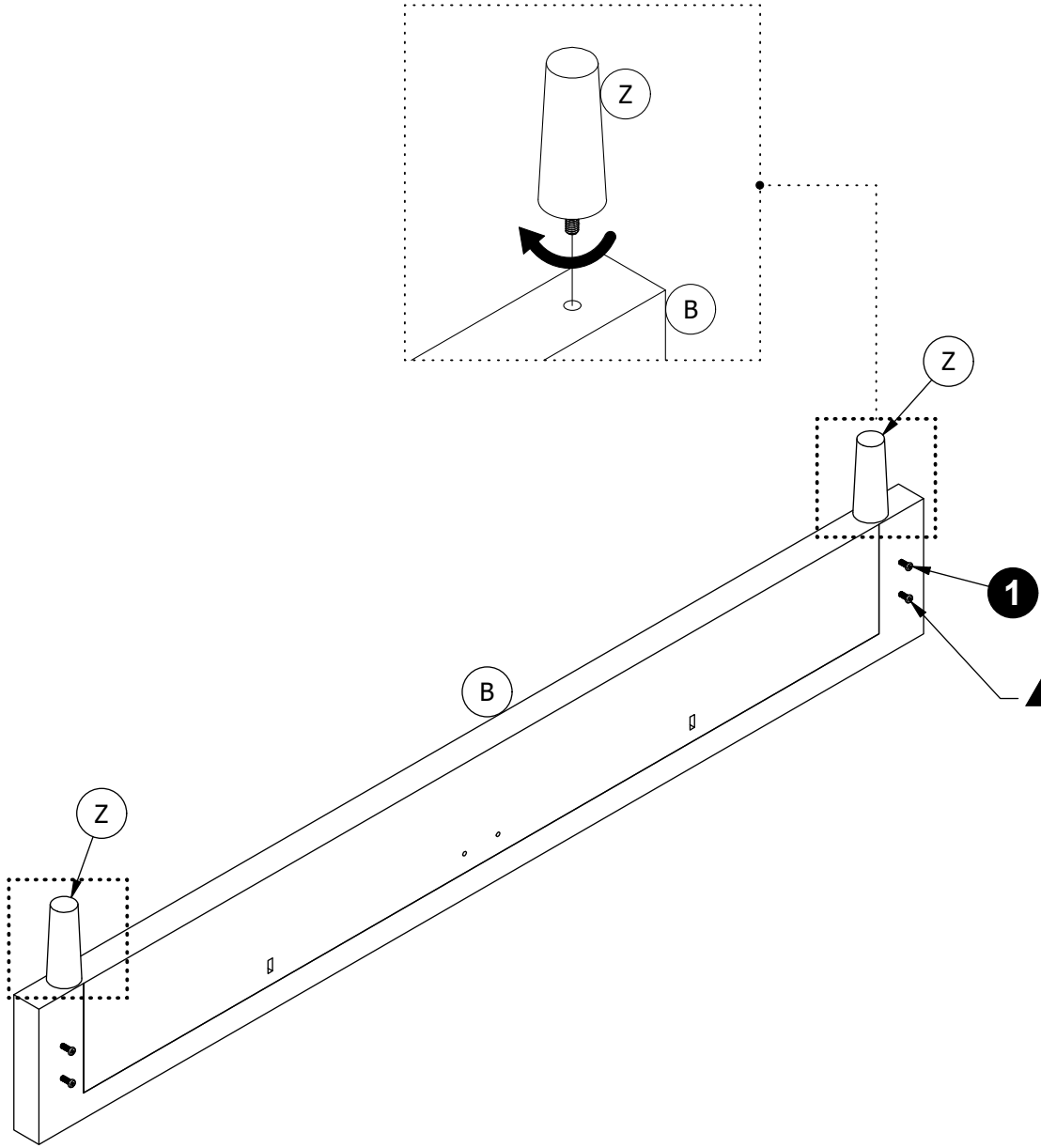

⚠ **Do not completely tighten the BOLTS leave half of the thread exposed.**

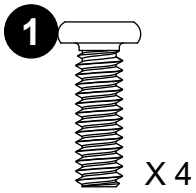

X 4

Step 5

5.1 Hang **C** & **D** on **A1** and **A2** as illustrated.

5.2 Hang **C** & **D** on **B** as illustrated.

⚠ Don't completely tighten the bolts until **STEP 9** is complete.This will help with alignment in the following assembling.

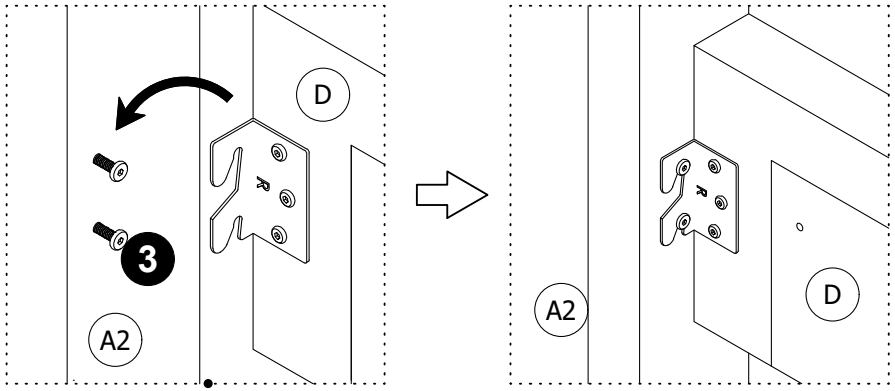

5.1

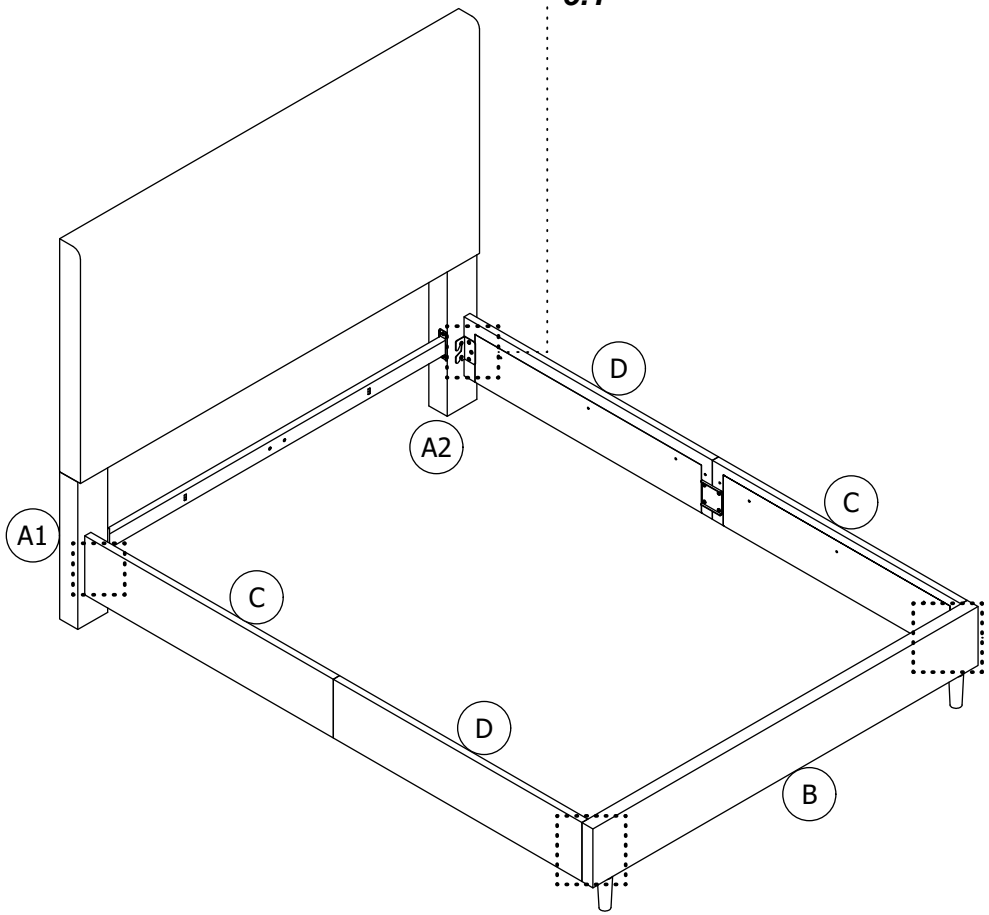

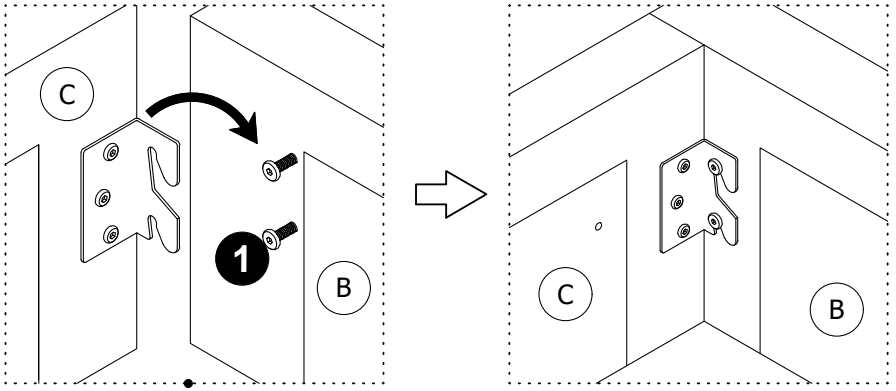

5.2

Step 6

Attach **J** X 2 to **H** with ❶ .

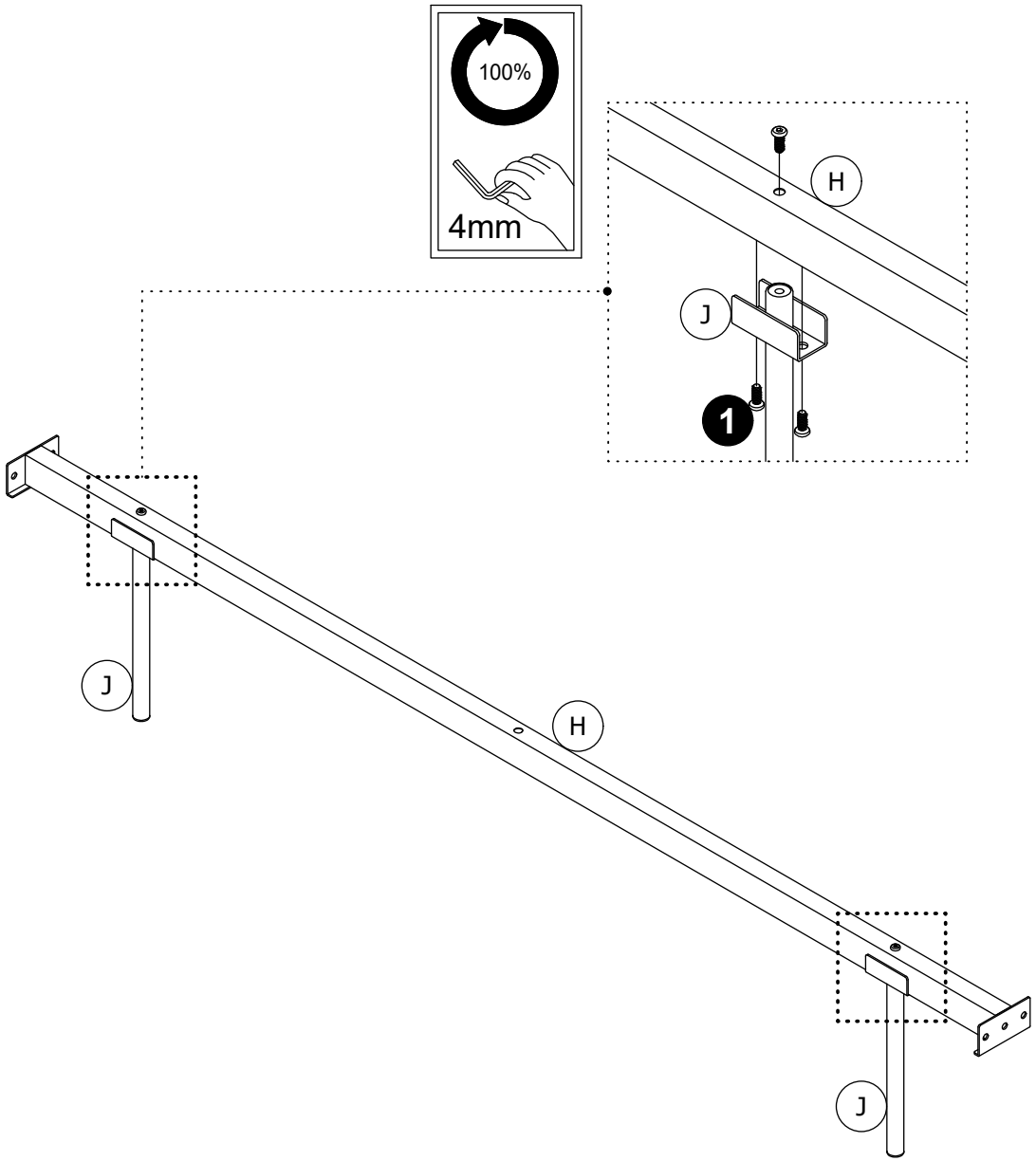

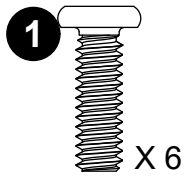

Step 7

Attach subassembly (**H** & **J**) from previous step to **C** & **D** with ❶.

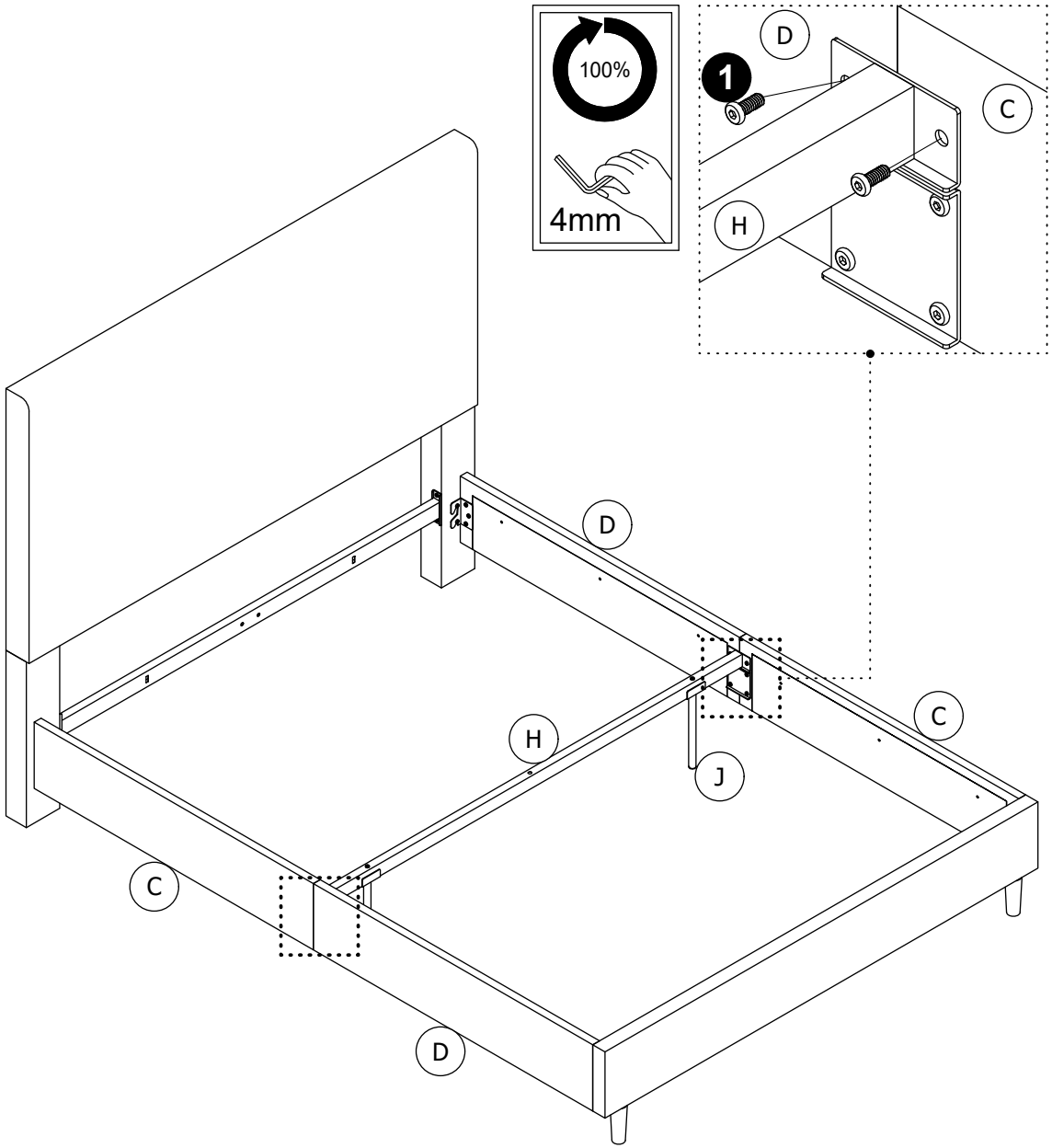

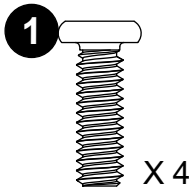

Step 8

8.1 Attach one **K** to **L** with ❶.

8.2 Attach the other **K** to B with ❶.

8.3 Attach **K** x 2 to **H** with ❺.

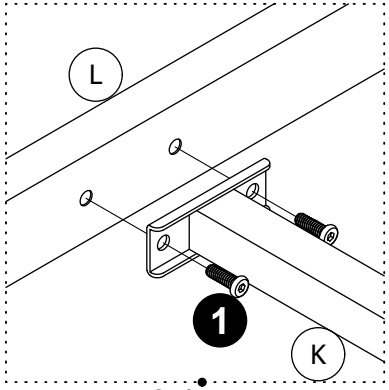

8.1

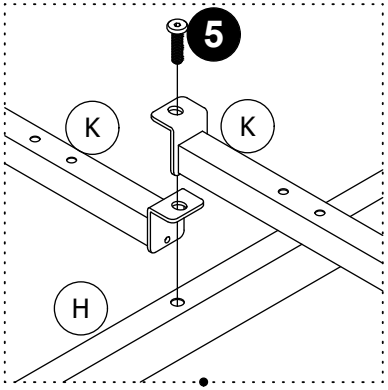

8.3

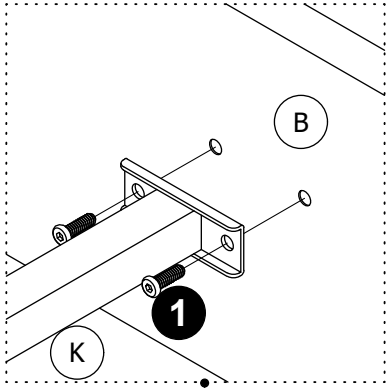

8.2

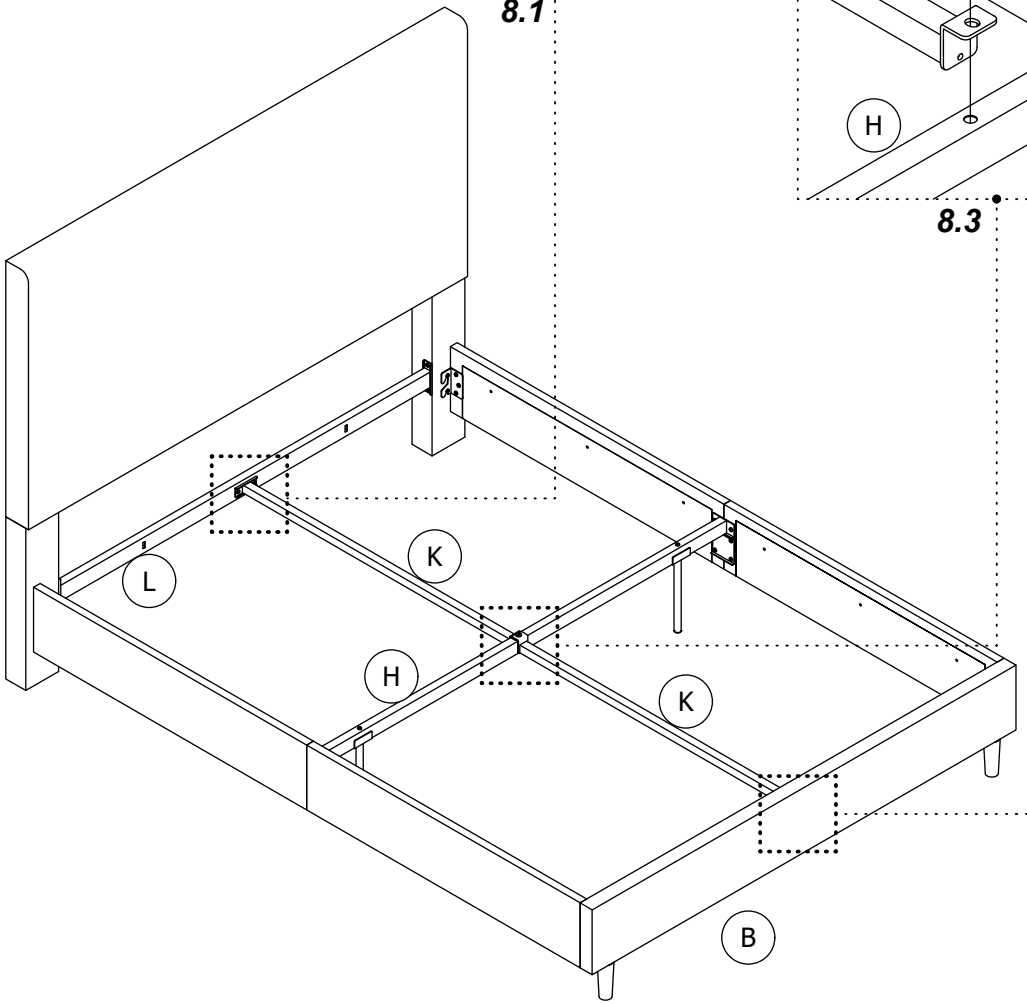

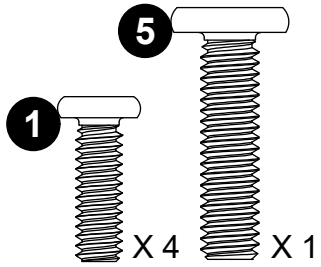

Step 9

Attach **G** x 4 to **C** & **D** with ❷.

⚠ **Fully tighten bolts in all steps.**

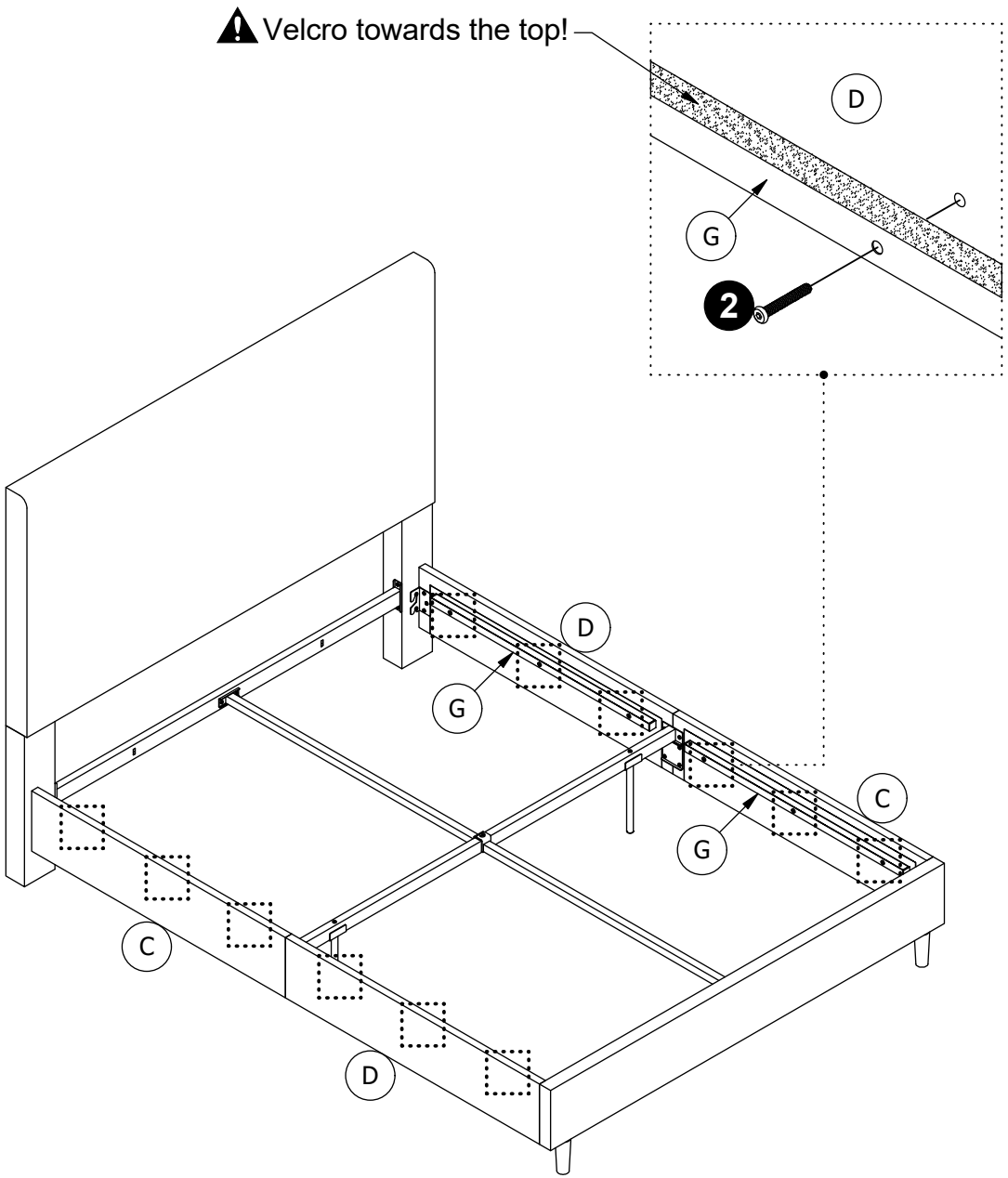

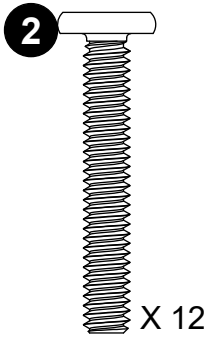

Step 10

10.1 Attach one end of **P** to **L** by inserting the tab into the slot and turn it to the level position.
10.2 Spread the slats **P** along the bed with equal spacing, engage the velcro at the end of slat with the counter part on **G**.

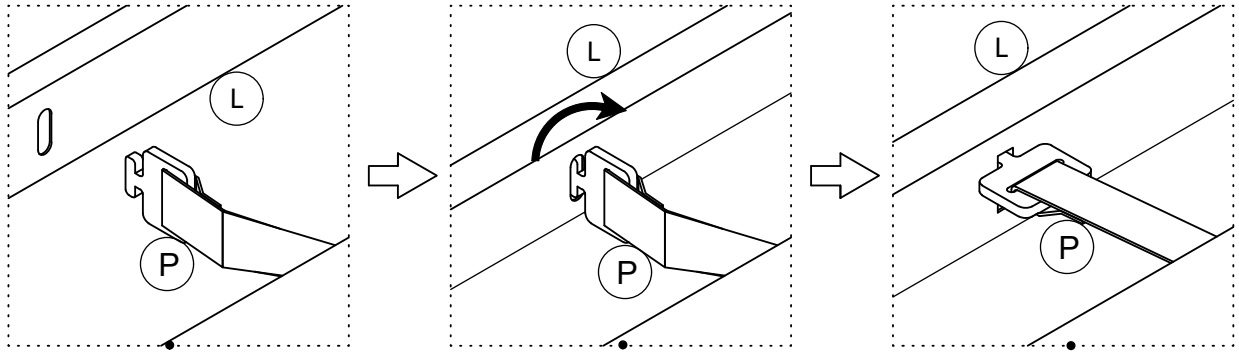

10.1

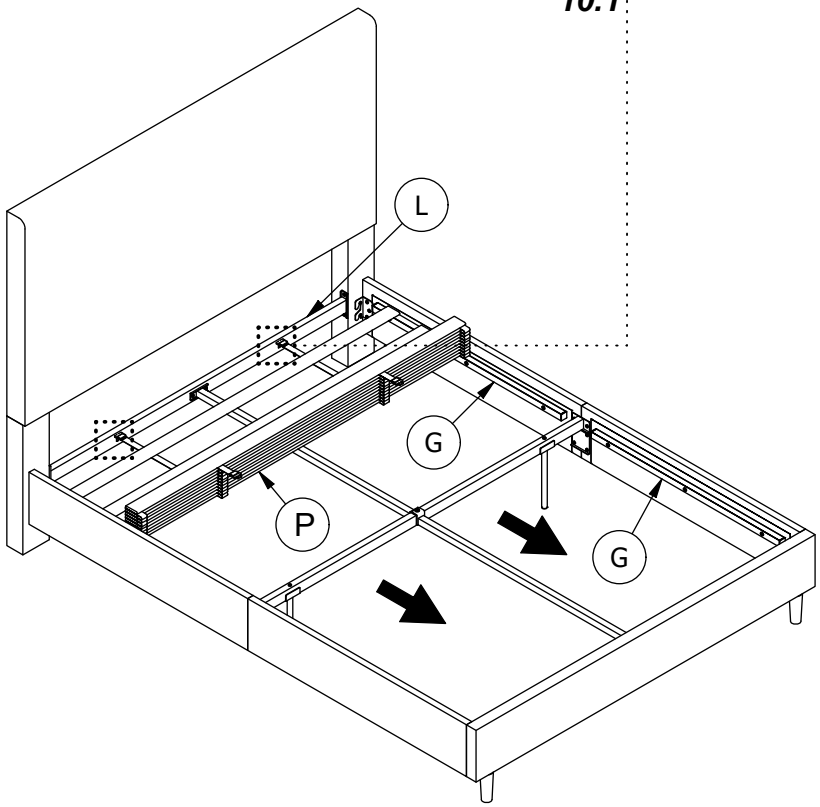

10.2

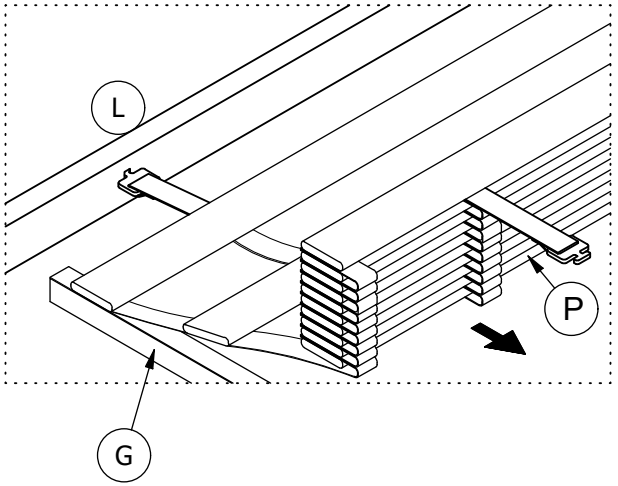

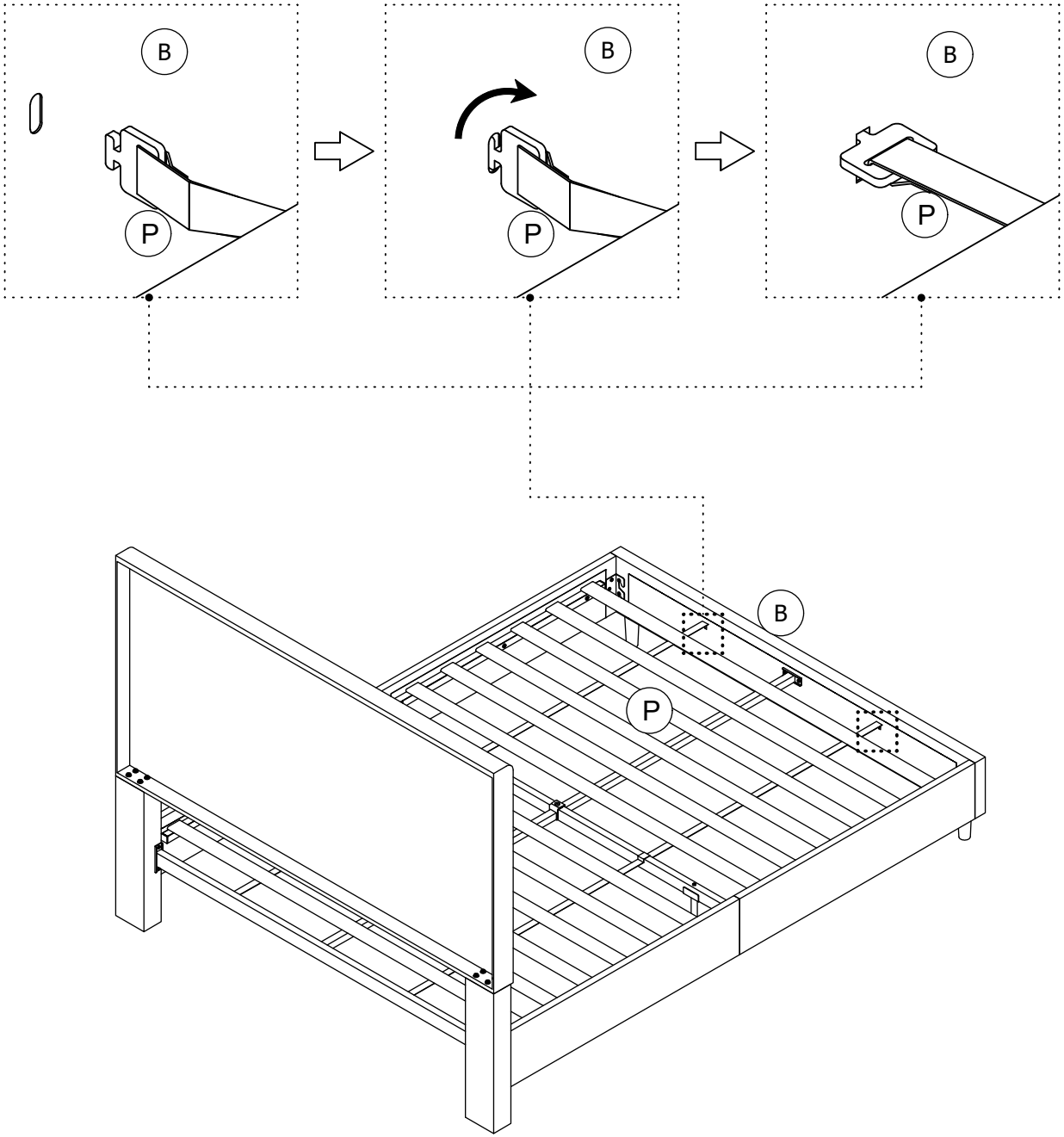

Step 11

Attach the other end of **P** to **B** by inserting the tab into the slot and turn it to the level position.

Step 12

Stick **N** to the back of **A** with Velcro as illustrated.

