ELEVATING FIRE TABLE ASSEMBLY INSTRUCTION

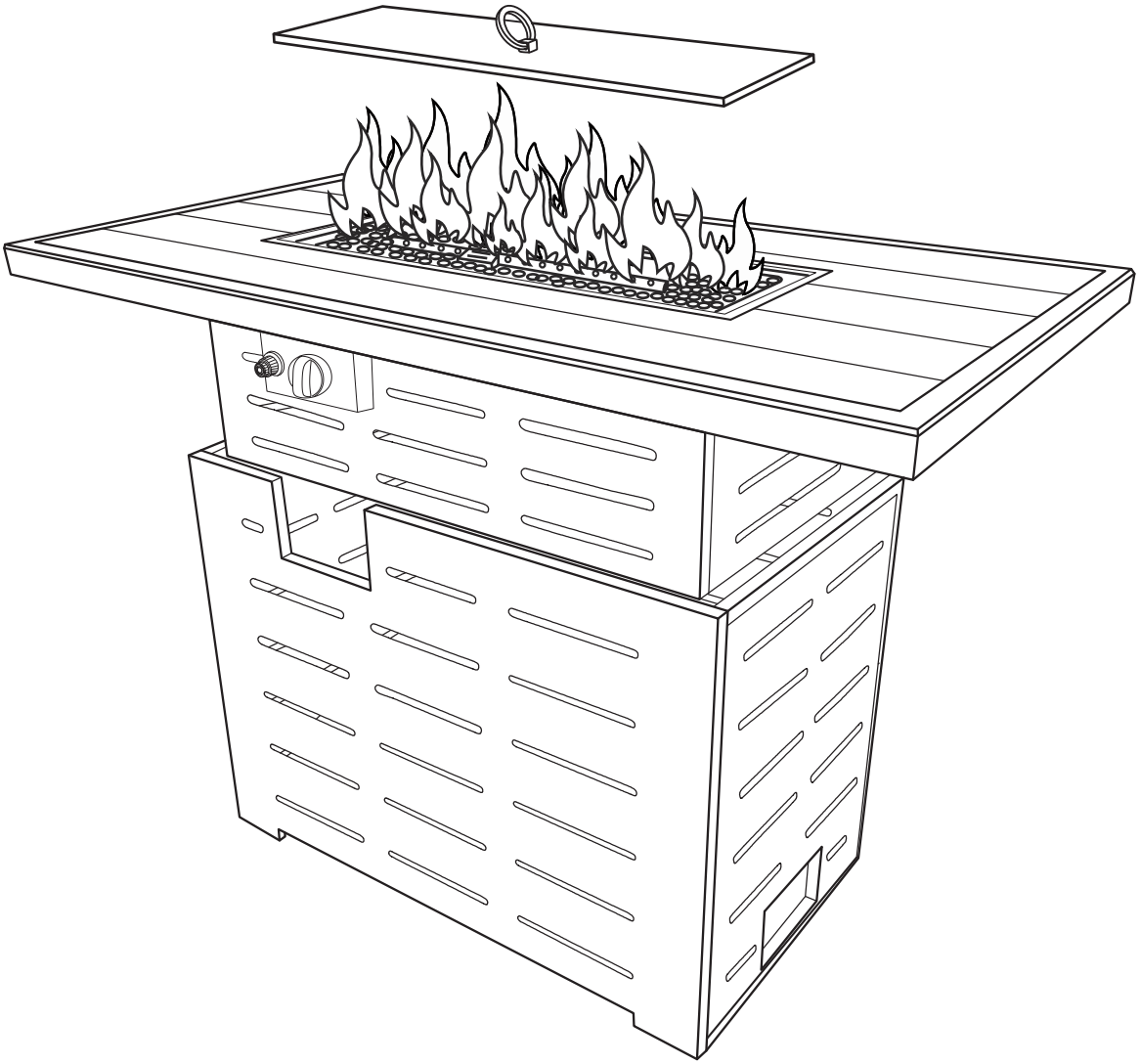

Attention

1. We are concerned about each customer's experience, if there is any missing or damage, please contact us at any time, we will provide effective solutions.

2. Please do not dispose of the original product box until you confirm you received the complete and correct item. If there are parts missing, please kindly send us messages to let us know the name of missing part regarding to the 6th page of instructions. We will send replacement to you asap.

3. If there is any damage, please send clear photos about damaged part to us as attachment, we will check and offer you best solution soon.

4. This fire pit table need a 1 AAA 1.5V battery to ignite.(Note:The battery is Not included.)

ASSEMBLY INSTRUCTIONS

⚠ DANGER:

FIRE OR EXPLOSION HAZARD

If you smell gas:

- **Shut off gas to the appliance.**
- **Extinguish any open flame.**
- **If odor continues, leave the area immediately.**
- **After leaving the area, call you gas supplier or fire department.**

Failure to follow these instructions could result in fire or explosion, which could cause property damage, personal injury, or death.

⚠ WARNING:

Do not store or use gasoline, or other flammable vapors and liquids, in the vicinity of this or any other appliance.
An LP-cylinder not connected for use shall not be stored in the vicinity of this or any other appliance.

⚠ WARNING: For Outdoor Use Only.

Installation and service must be performed by a qualified installer, service agency, or the gas supplier.

⚠ DANGER



CARBON MONOXIDE HAZARD

This appliance can produce carbon monoxide which has no odour.
Using it in an enclosed space can kill you.
Never use this appliance in an enclosed space such as a camper, tent, car or home.

INSTALLER: Leave this guide with the appliance.
CONSUMER: Retain this manual for future reference.

⚠ WARNING:

If the information in this manual is not followed exactly, a fire or explosion may result causing property damage, personal injury, or loss of life.

⚠ WARNING:

Improper installation, adjustment, alteration, service or maintenance can cause injury or property damage. Read the installation, operating and maintenance instructions thoroughly before installing or servicing this equipment.

CATALOGUE

01 LP Gas Cylinder 1

1.1 LP Safety 1

1.2 Enclosures for Self-contained LP Gas Systems 2

1.3 Connection & Disconnection 3

1.4 Leak Test 3

02 Assembly 6

2.1 Parts List 6

2.2 Assembly Steps 7

2.3 How to Elevate the Fire Table 13

2.4 How to Lower the Fire Table 14

03 Ignition 16

3.1 Ignition Steps 16

3.2 Ignition Troubleshooting 18

3.3 Got A Low Frame? 19

3.4 Extinguish the Appliance 19

3.5 Fire Table Maintenance 19

04 Warning Notes 20

ASSEMBLY INSTRUCTIONS


WARNING! HOT SURFACE!


GLASS. FRAGILE!


HANDLE WITH CARE


HEAVY OBJECT.
TWO PERSON LIFT REQUIRED.

LP SAFETY:

a. Do not store a spare LP-gas cylinder under or near this appliance.

b. Never fill the cylinder beyond 80 percent full.

c. If the information in "(a)" and "(b)" is not followed exactly, a fire causing death or serious injury may occur.

Do not use this appliance under overhead combustible surfaces.

MINIMUM CLEARANCES:

- Bottom: Non-Combustible Surface
- Top: 60 inches
- Sides: 36 inches
- For Installation on (or over) non-combustible floors only

Max. Input: 50,000 BTU/h
Max. Gas Supply Pressure: 250 PSI
Min. Gas Supply Pressure: 25 PSI

This appliance shall be used only outdoors in a well-ventilated space and shall not be used in a building, garage or any other enclosed area.
If this appliance is not in use, the gas must be turned off at the supply cylinder.
Indoor storage of this appliance is permissible only if the cylinder is disconnected and removed from the appliance.
Cylinders must be stored outdoors in a well-ventilated area out of the reach of children.
Disconnected cylinders must have threaded valve plugs tightly installed and must not be stored in a building, garage or any other enclosed area.
The gas pressure regulator provided with this appliance must be used, and must be the same model as supplied with the unit.
The cylinder supply system must be arranged for vapor withdrawal.
Cylinders used with this unit must have a collar to protect the cylinder valve.
An approved LP-Cylinder stabilizer, such as the stabilizer ring included, must be used when the appliance is in use.

LP CYLINDER:

All LP cylinders to be used with this appliance must be:
a.Constructed and marked in accordance with the specifications for LP-gas cylinders Standard, CAN/CSA B339, Cylinders, Spheres and Tubes for the Transportation of Dangerous Goods.
b.Provided with a listed overfilling prevention device.
c.Provided with a cylinder connection device compatible with the connection for outdoor cooking appliances.
d.Only a 20 lb (9 kg) LP gas cylinder is to be used for this appliance, approximately 18" (46 cm) high & 12" (30 cm) diameter.

ASSEMBLY INSTRUCTIONS

⚠ WARNING:

Please ensure that all adults and children who use or are near a unit in use are aware of the hazard of high surface temperatures present on the unit during use and should use caution and stay away to avoid burns or clothing ignition.

Carefully supervise young children in the area of this appliance. Clothing or other flammable materials should not be hung from the appliance or placed on or near the appliance. Any guard or other protective device removed for servicing the appliance must be replaced prior to operating the appliance.

Installation and repair should be done by a qualified service person. The appliance should be inspected before use and at least annually by a qualified service person. More frequent cleaning may be required as necessary. It is imperative that control compartment, burners and circulating air passageways of the appliance be kept clean.

ENCLOSURES FOR SELF-CONTAINED LP GAS SYSTEMS:

An enclosure for an LP-gas cylinder shall be ventilated by openings at both the upper and lower levels of the enclosure. This shall be accompanied by one of the following:
a. One side of the enclosure shall be completely open; or
b. For an enclosure having four sides, a top, and a bottom:

At least two ventilation openings shall be provided in the sidewalls of the enclosure, located within 5 in (217 mm) of the top of the enclosure, equally sized, spaced at a minimum of 90 degrees (1.57 rad), and unobstructed. The opening(s) shall have a total free area of not less than 1 in^2 per lb (14.2 cm^2 per kg) of stored fuel capacity.

Ventilation opening(s) shall be provided at floor level of the enclosure and shall have total free area of not less than 1/2 in^2 per lb (7.1 cm^2 per kg) of stored fuel capacity. If ventilation openings at floor level area are in the side wall, there shall be at least two openings. The bottom of the openings shall be 1 in (25.4 mm) or less from the floor level and the upper edge no more than 5 in (127 mm) above the floor level. The openings shall be equally sized, spaced at a minimum of 90 degrees (1.57 rad), and unobstructed.

Every opening shall have minimum dimensions so as to permit the entrance of a 1/8 in (3.2 mm) diameter rod. Ventilation openings in sidewalls shall not communicate directly with other enclosures of the appliance.

ASSEMBLY INSTRUCTIONS

CONNECTION:

1.Be sure the cylinder valve and appliance valves are “off”.
2.Place full LP gas cylinder on tank stabilizer ring. Secure the base of the LP gas cylinder by hand tightening the wing-nut collar.
3.Center the nipple in the cylinder valve and hold in place.
4.Using the other hand, turn the hand wheel clockwise until there is a positive stop. Do not use tools.
5.Hand tighten only. When making the connection, hold the regulator in a straight line with the cylinder valve, so as not to cross thread the connection.
6.Leak test the connection.

DISCONNECTION:

1.Be sure the cylinder valve and appliance valves are "off" before disconnection.
2.Using one hand, turn the hand wheel anticlockwise.

LEAK TEST:

1.DO NOT USE OR PERMIT SOURCES OF IGNITION IN THE AREA WHILE DOING THE LEAK TEST. THIS INCLUDES SMOKING.
2.Leak testing should be done once per year or whenever the LP gas cylinder or any other gas system part is taken apart, serviced or replaced, whichever is more frequent.
3.Ensure all gas system coupling joints are tight and properly attached.
4.Prepare a leak testing solution of half liquid detergent and half water.
5.Apply the solution to the LP gas delivery system at points as shown in illustration indicated on page 5.
6.The leak(s) must be stopped by tightening the loose joints, if possible, or by replacing the faulty parts(s) with the part(s) recommended by the appliance manufacturer.

ASSEMBLY INSTRUCTIONS

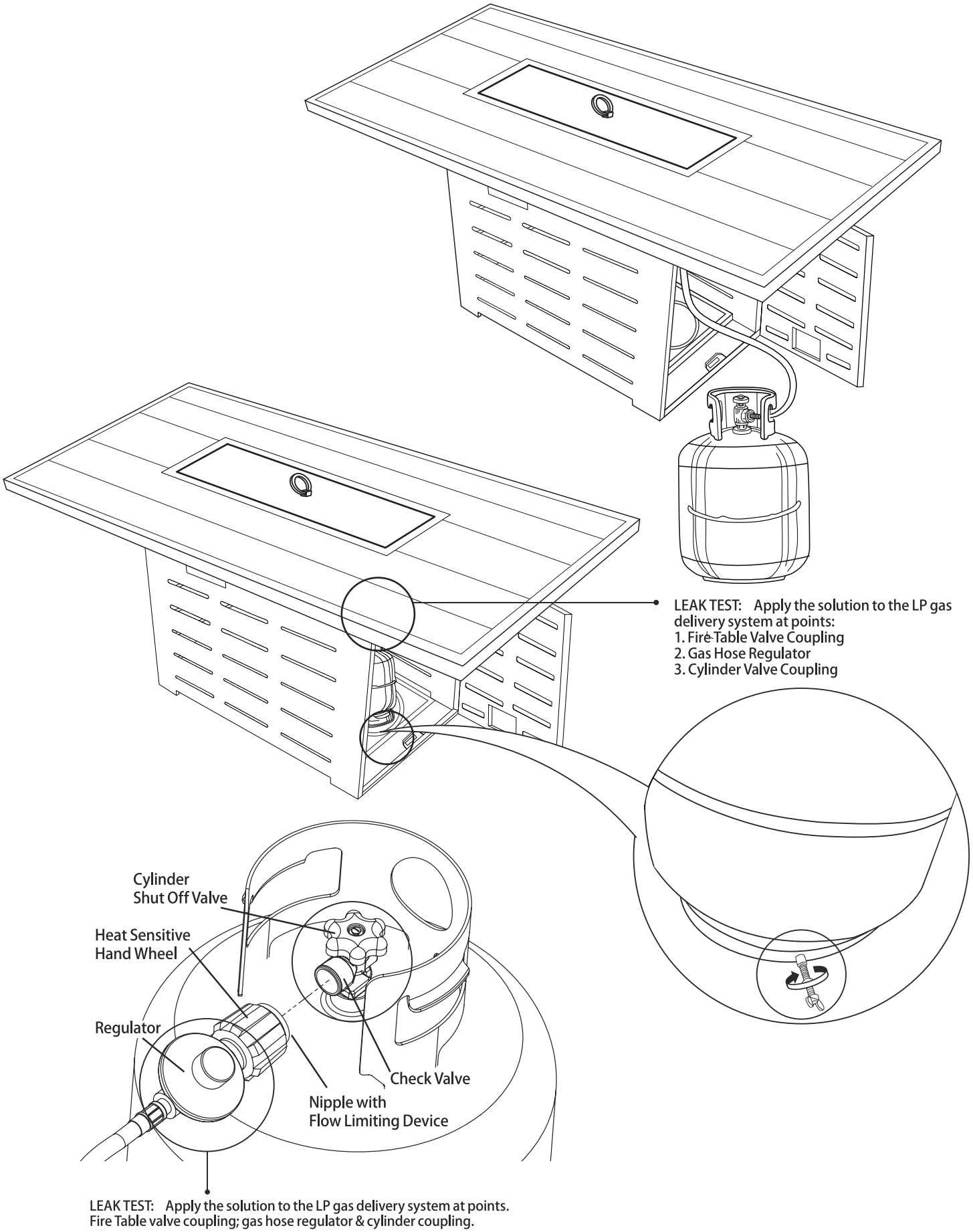

ASSEMBLY INSTRUCTIONS

⚠WARNING:

If the information in this manual is not followed exactly, a fire or explosion may result causing property damage, personal injury or loss of life. Installation and service must be performed by a qualified installer, service agency or the gas supplier.

THE APPLIANCE IS NOT TO BE USED UNTIL ANY LEAK IS CORRECTED.

A gas appliance repairman or LP gas dealer should be called if attempts to stop the leak(s) are unsuccessful and, in such case, the LP gas supply must be shut off at the cylinder valve or the cylinder must be removed from the appliance until the leak(s) is corrected.

Inspect hose prior to each use of the unit. To gain access for inspection remove the side panels. To remove each side panel, simply use pull rings and lift panel away. Refer to assembly instructions for visual diagrams. The hose assembly must be replaced prior to the appliance being put into operation if there is evidence of excessive abrasion or wear, or if the hose is damaged. Contact our customer service should you require a replacement hose.Replacement hose assembly shall be the one that is specified by manufacturer.

Inspect burner prior to each use. Burner must be replaced prior to the appliance being put into operation if there is evidence of damage. Contact our customer service should you require a replacement burner.

Should any part of this appliance (including the burner) become soiled or dirty, wipe lightly with a damp cloth. Do not use flammable or corrosive cleaning products on or near this unit.

Ensure that gas hose is placed in an area where it is unlikely to be tripped over (such as pathways or trails) or subject to other accidental damage.
Keep the appliance area clear and free from combustible materials, gasoline and other flammable vapors and liquids.

Solid fuels shall not be burned in this appliance.

The installation must confirm with local codes, or in the absence of local codes with the National Fuel Gas Code, ANSI Z223.1·NFPA 54; National Fuel Gas Code; Natural Gas and Propane Installation Code, CSA B149.1; or Propane Storage and Handling Code, CSA B149.2, as applicable.

TABLE OF CONTENTS

PARTS LIST

A Inner Front Panel 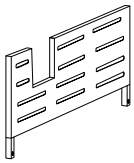 1PC	B Inner Side Panel 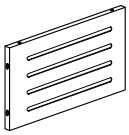 2PCS	C Inner Back Panel 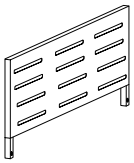 1PC	D Tabletop 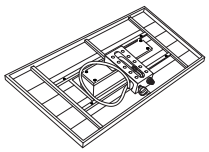 1PC
E Tank Base 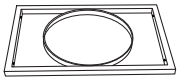 1PC	F Outer Front Panel 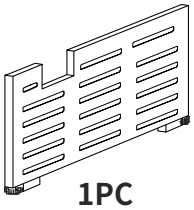 1PC	G Outer Back Panel 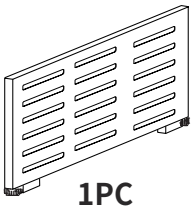 1PC	H Right Outer Panel 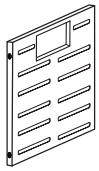 1PC
I Upper Support Rod 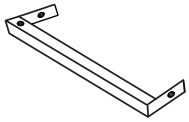 1PC	J Lower Support Rod 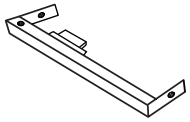 1PC	K Left Outer Panel 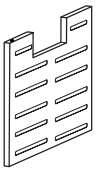 1PC	L Lid 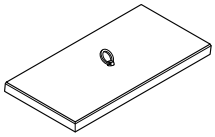 1PC
R Cover 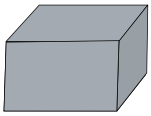 1PC	S Lava Rocks 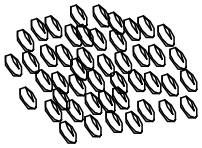 1PC	T Wind Guard 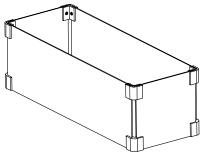 1PC	

N M6*15  4PCS	O M6*30 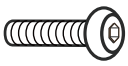 22PCS	P Track Shoulder Screw 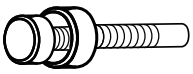 4PCS	Q Washer  26PCS	M Allen Wrench  1PC

NOTE: Please do not tighten the all the screws until the step 7.

ASSEMBLY INSTRUCTIONS

ATTENTION:
When installing, we suggest you can assemble it on the carton which come with the product, or any other clean floor to avoid the desktop being scratched.

Step 1 Fix 2 inner side panels(B) to the inner front panel(A) with 4 PCS screws(O) and 4 PCS washers(Q).

50%

A		1 PC
B		2 PCS
O	M6*30	4 PCS
Q		4 PCS

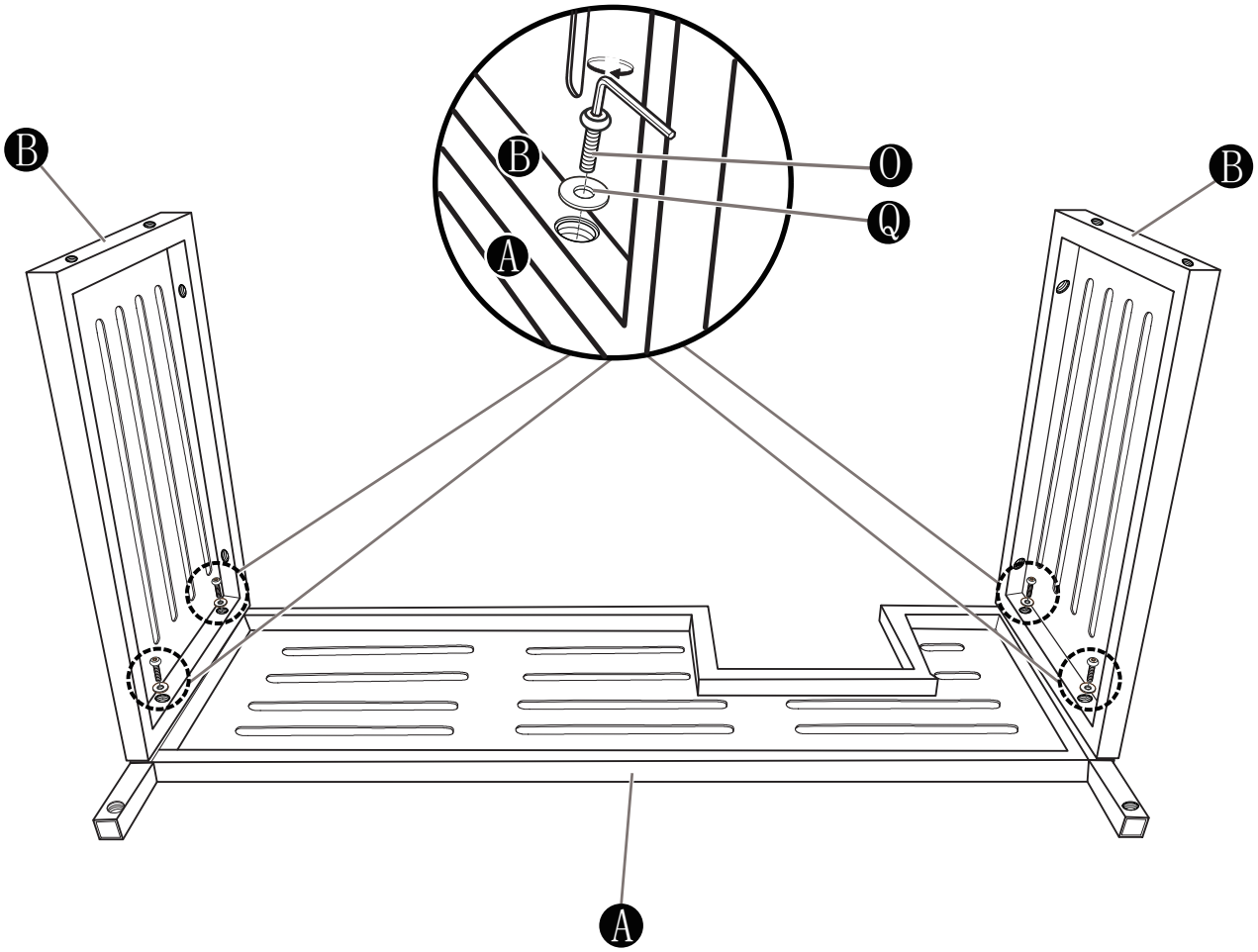

Step 2

Attach the inner back panel(C) to the inner side panels(B) with 4 PCS screws(O) and 4 PCS washers(Q).

50%

C		1 PC
O	M6*30	4 PCS
Q		4 PCS

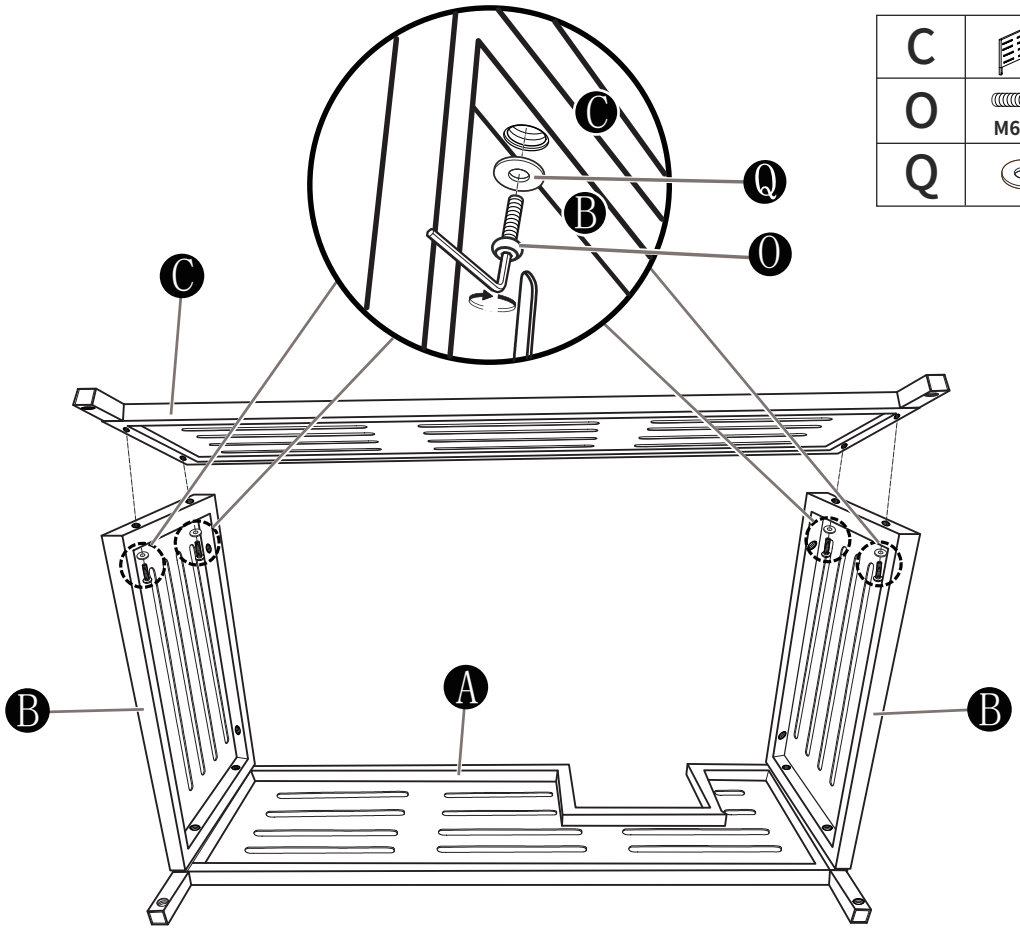

Step 3

Attach the inner side panels(B) to the tabletop(D) with 4 PCS screws(O) and 4 PCS washers(Q).

50%

D		1 PC
O	M6*30	4 PCS
Q		4 PCS

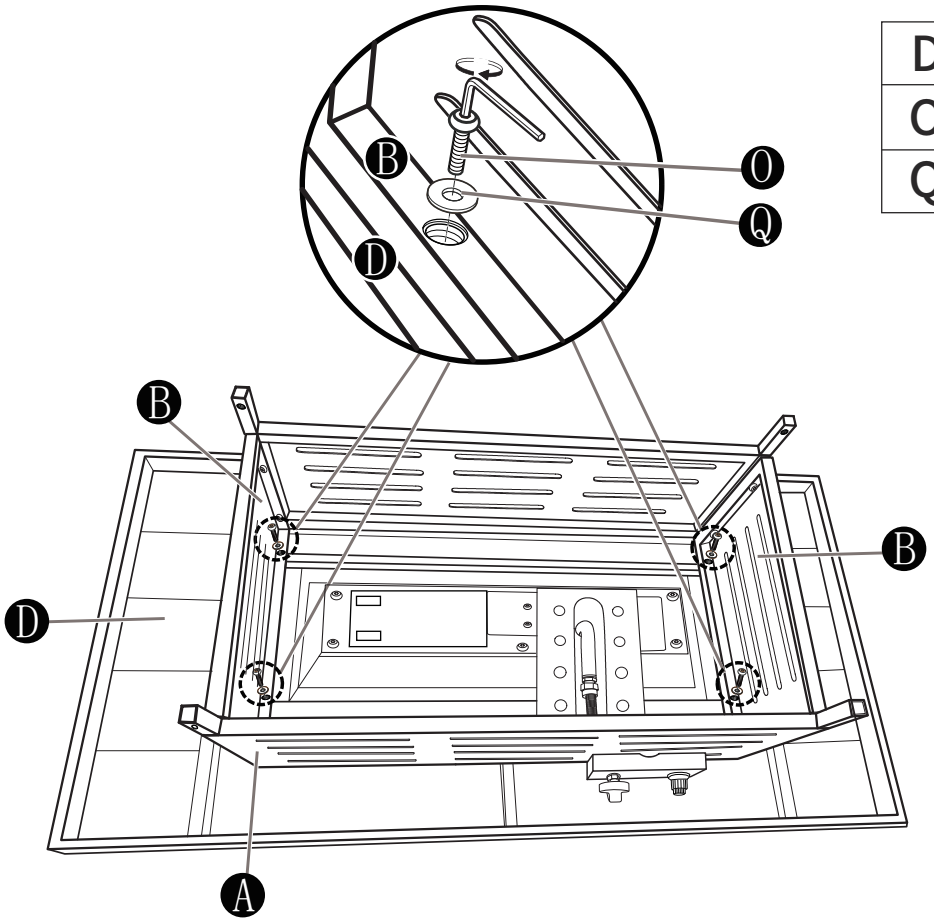

Step 4

Connect the tank base(E) to the outer front panel(F) and outer back panel(G) with 4 PCS screws(O) and 4 PCS washers(Q).



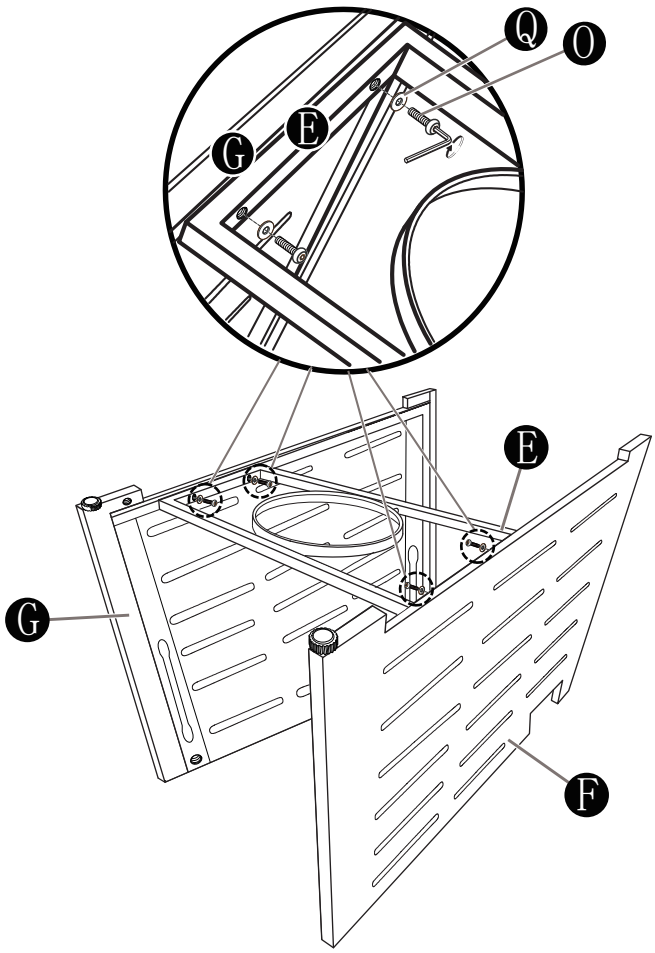

F		1 PC
G		1 PC
E		1 PC
O	 M6*30	4 PCS
Q		4 PCS

Step 5

Attach the right outer panel(H) to the outer front panel(F) and outer back panel(G) with 4 PCS screws(O) and 4 PCS washers(Q).



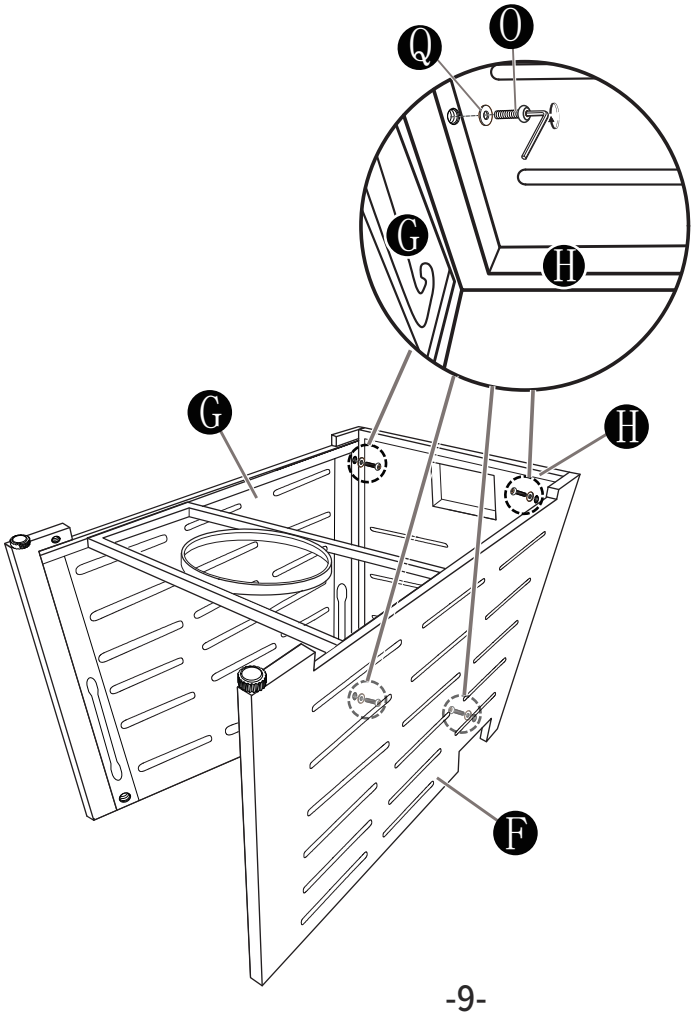

H		1 PC
O	 M6*30	4 PCS
Q		4 PCS

Step 6

Attach the upper support rod(I) to the outer front panel(F) and outer back panel(G) with 2 PCS screws(N) and 2 PCS washers(Q).

50%

I		1 PC
N	M6*15	4 PCS
Q		4 PCS

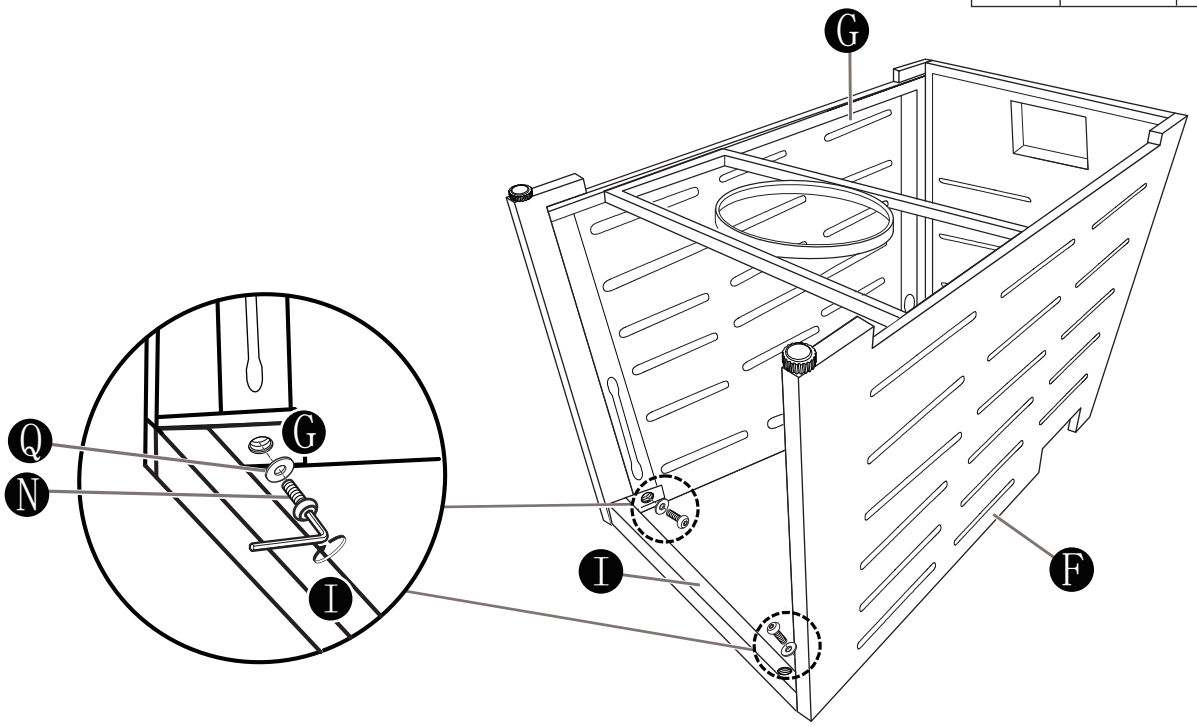

Step 7

Attach the lower support rod(J) to the outer front panel(F) and outer back panel(G) with 2 PCS screws(N) and 2 PCS washers(Q).

50%

J		1 PC
N	M6*15	4 PCS
Q		4 PCS

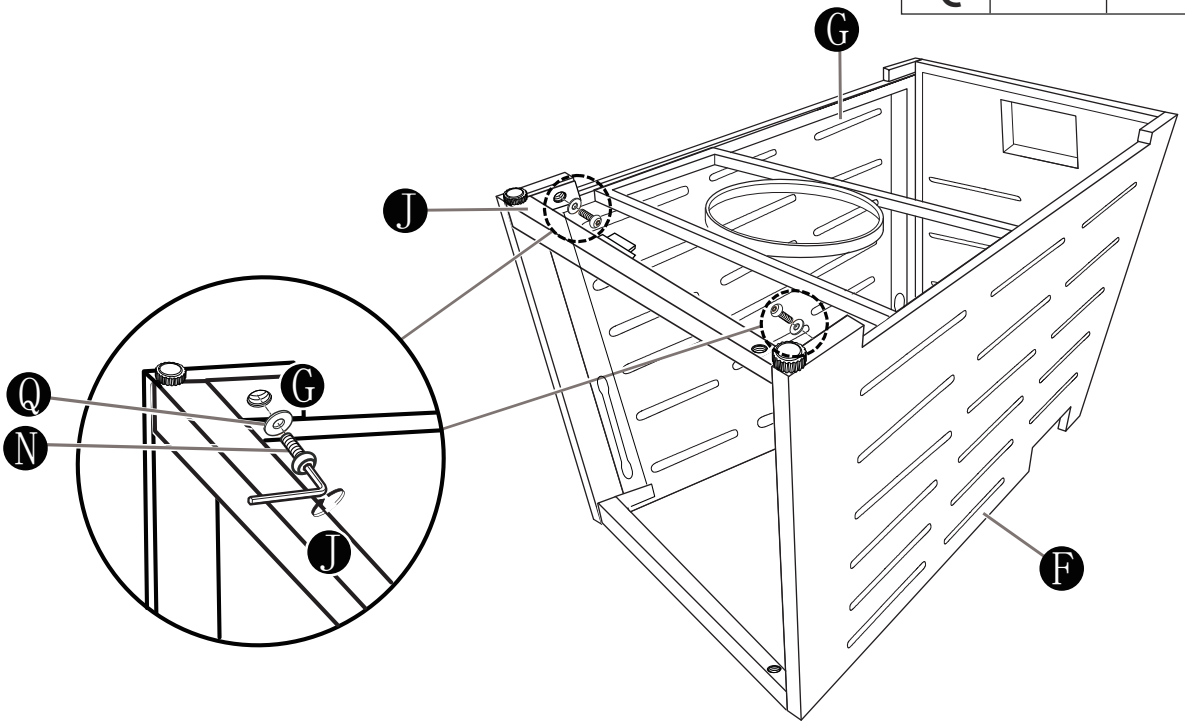

Step 8

Attach the left out panel(K) to the upper support rod(I) and lower support rod(J) with 2 PCS screws(O) and 2 PCS washers(Q).

K		1 PC
O	M6*30	2 PCS
Q		2 PCS



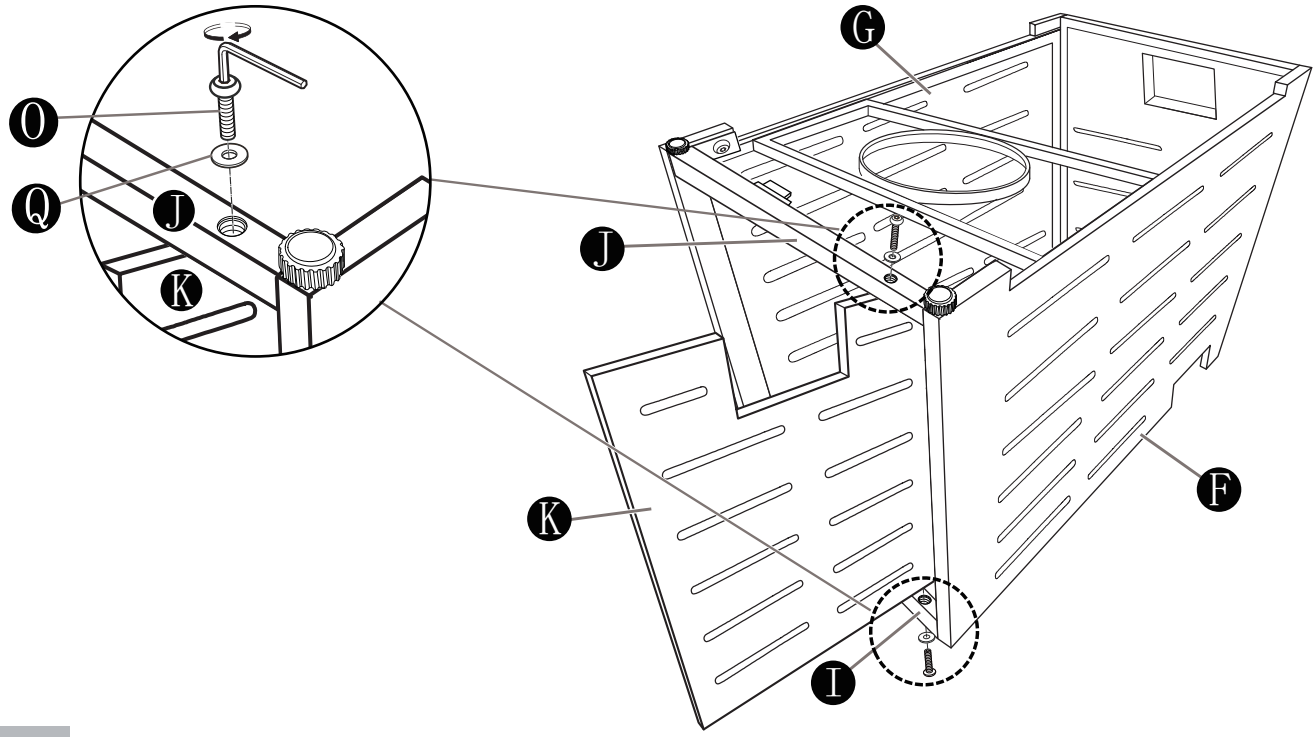

Step 9

Attach the outer panel set to the inner panel set with 4 PCS track shoulder screws(P).

P	Shoulder Screw	4 PCS
	Nut	4 PCS



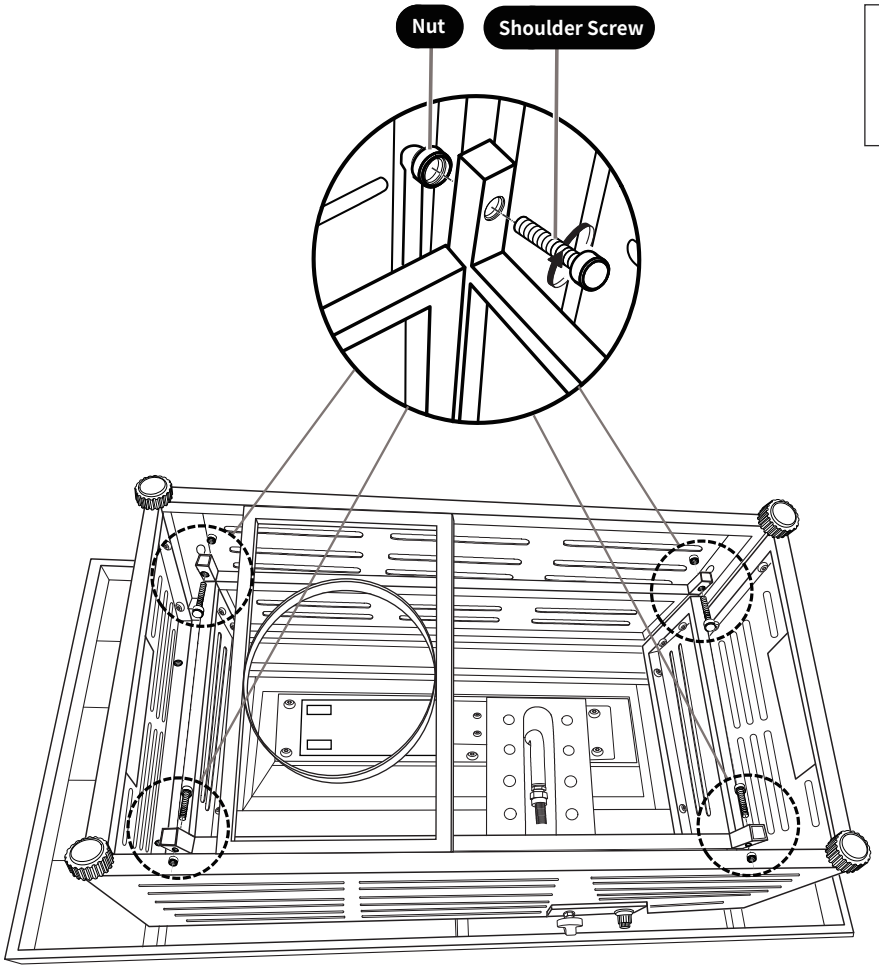

Step 10 Put the lava rocks (S) into the burner, and close the lid(L).

L		1 PC
S		1 PC

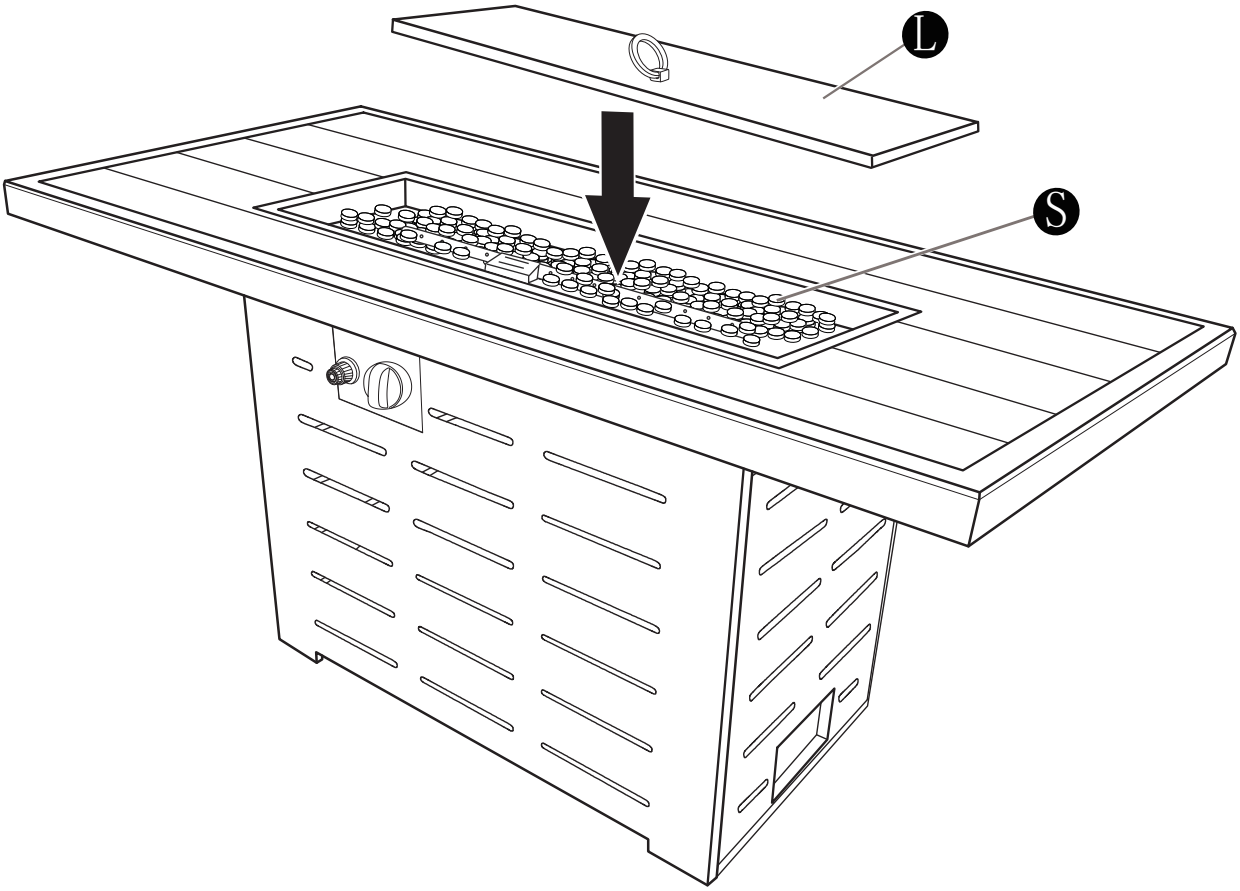

HOW TO ELEVATE THE FIRE TABLE

A **Secure the outer panel with your foot, then lift the inner panel upward.**

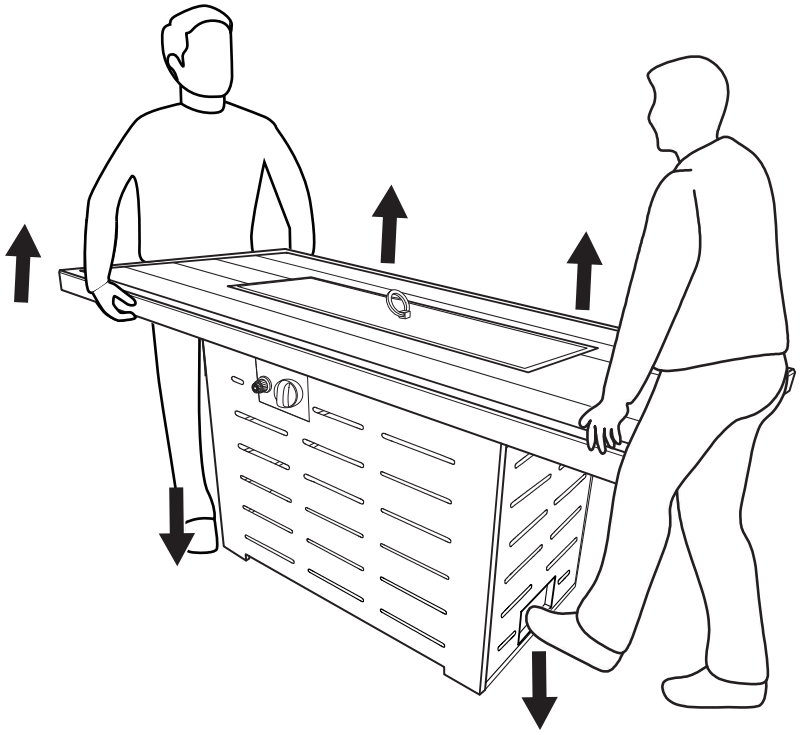

B **Push the entire inner panel away from the control panel. You will hear a click, which confirms the tabletop is locked.**

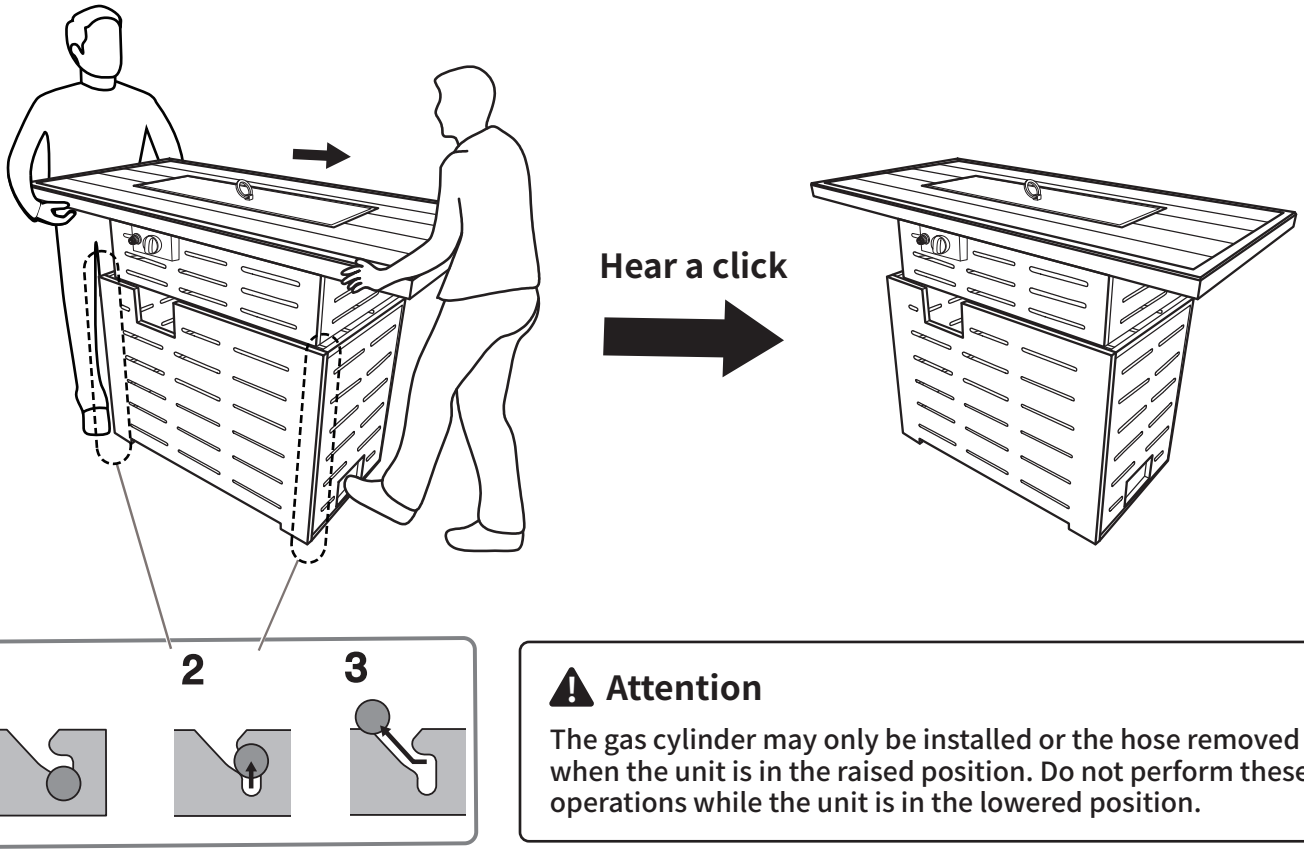

⚠ Attention

The gas cylinder may only be installed or the hose removed when the unit is in the raised position. Do not perform these operations while the unit is in the lowered position.

HOW TO LOWER THE FIRE TABLE

A **Secure the outer panel with your foot. Push the entire inner panel toward the control panel to release the lock.**

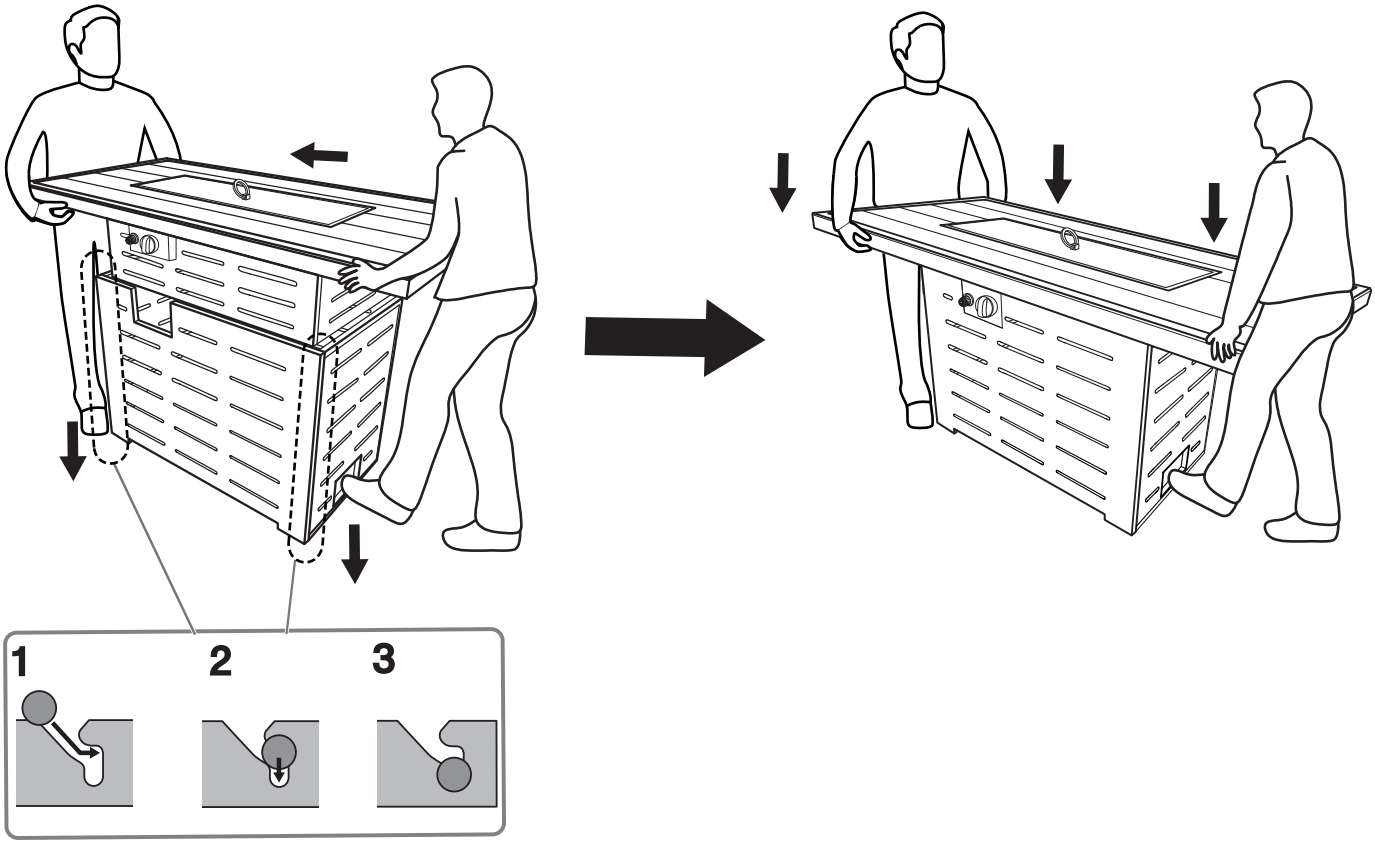

B **Hold the inner panel and lower it down.**

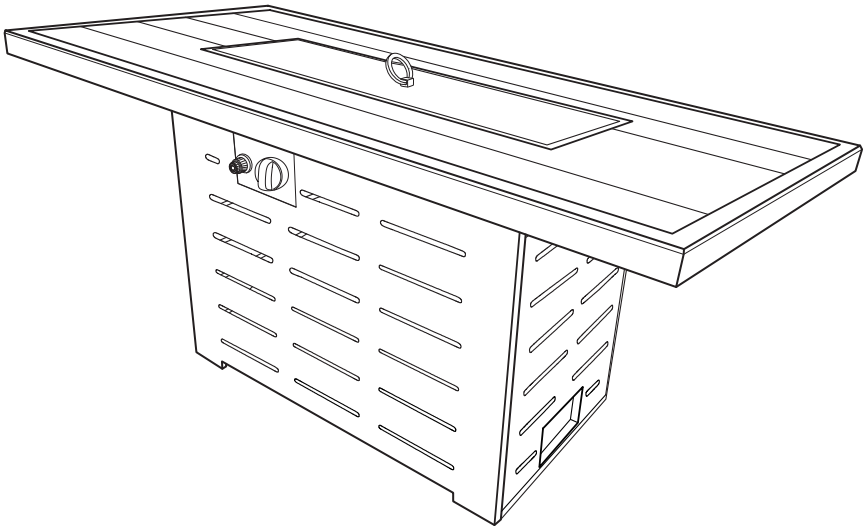

ASSEMBLY INSTRUCTIONS

Note:

Lava Rocks shall be arranged neatly and evenly in the burner tray. Ensure igniter cover is not covered by lava rocks (see example). This helps air circulate. Take care to keep rocks out of the igniter cover. Keep igniter clean of dust. For best flame results adjust the rocks to expose the burner tube holes.
Our preferred configuration is listed here.

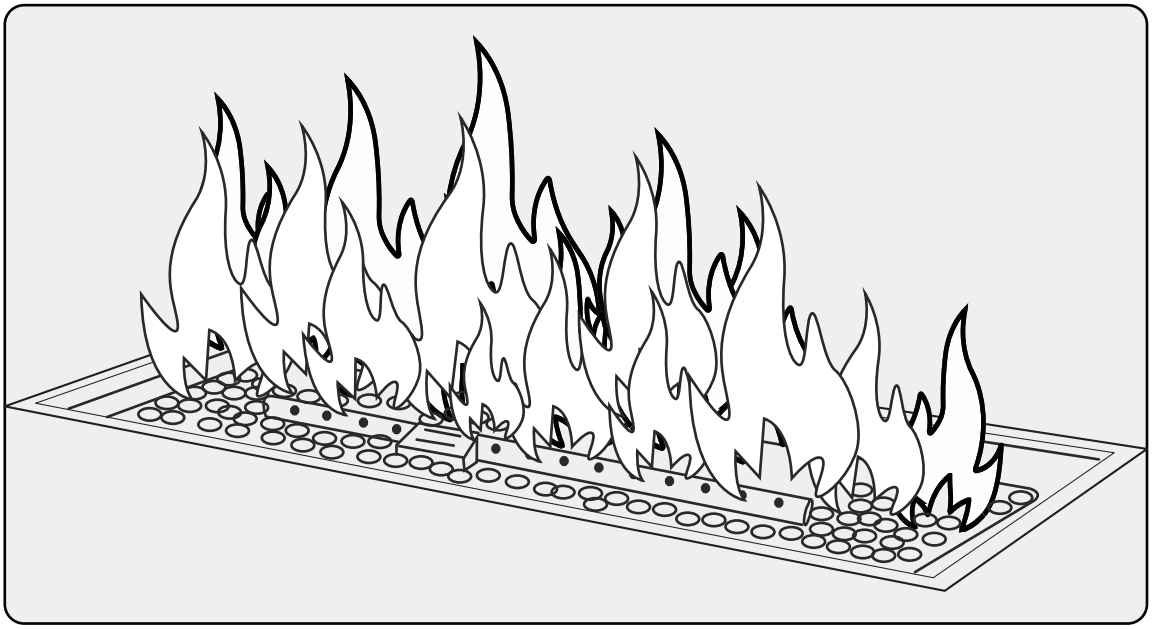

⚠WARNING:

Never handle lava rocks which have not been allowed to cool from exposure to flame.
Never attempt to rearrange rocks while unit is ignited.

NOTE: Rocks are not to exceed 5 kg or 11 lb.
NOTE: Never use a lid or cover to extinguish the flame on your Fire Table.

ASSEMBLY INSTRUCTIONS

⚠NOTE TO USER:

Before igniting the unit for the first time, follow steps one through 5 in the below Ignition section.1AAA 1.5V battery is needed（NOT included）

SECTION 1: IGNITION STEPS

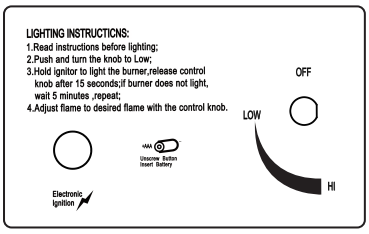

STEP 1

Ensure that unit valve dial is in the “OFF” position by pushing and turning clockwise until the dial stops.

STEP 2

Connect the LP gas cylinder. See section labeled “Connection”.

STEP 3

Ensure the gas hose is not contacting the top of the Fire Table enclosure and the tank is stabilized in the collar with the wing nut.

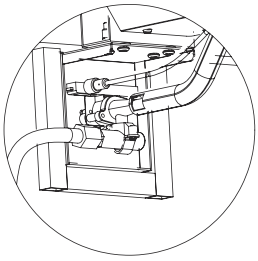

Caution: Always ensure the gas valve orifice and burner tube venturi is clear of all debris including spider webs.

STEP 4

SLOWLY turn cylinder valve to the open position to avoid tripping the excess flow safety device in the gas regulator.
For more information about the excess flow safety device see Section 3 (page 18).

STEP 5

Leak Test all connections. See section labeled “Leak Test”.

STEP 6

Your Fire Table is equipped with an auto spark ignition (piezo ignition). Push the knob in and slowly turn counter-clockwise to the high position. The ignitor will spark and ignite the gas.
Should the appliance fail to ignite on the first try, promptly repeat the ignition attempt within 5 seconds. If a third attempt fails to ignite the Fire Table then rotate the knob to the “off” position and wait 5 minutes before attempting to ignite again.

ASSEMBLY INSTRUCTIONS

⚠WARNING:

Ensure that no parts of your body, clothing, or any other combustible material are above the burner before, during and after ignition. Ensure the cover is stored safely away from the Fire Table when the Fire Table is in use.

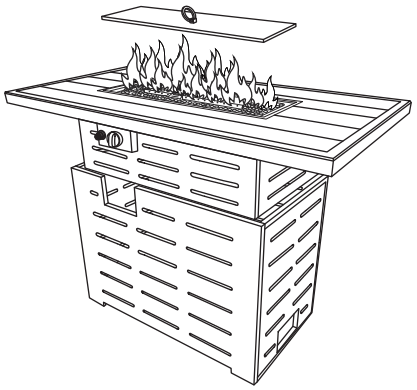

STEP 7

Once the unit is burning normally, set the dial to desired flame height.

STEP 8 PERIODIC INSPECTION OF BURNER FLAMES

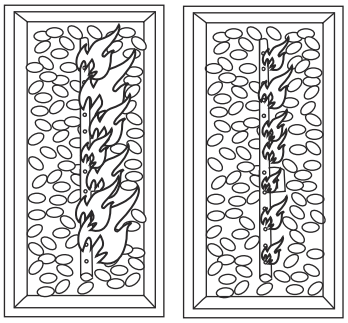

Upon igniting the appliance, visually verify that the burner is indeed burning as demonstrated in the image. The presence of flames will confirm that the burner is burning. Periodically check that the burner flame is present during operation by visually

If there are no flames present, as demonstrated in the image, the appliance is likely not burning. If this is the case, IMMEDIATELY turn the valve to the "off"position if it is not already and repeat the ignition procedure as outlined in Section 2.

Normally the burner flame is yellow.
If the burner flame is blue and very small, please check the gas cylinder, as it may be low gas pressure or empty. If there is enough gas in the cylinder, please contact customer service to change the burner of the gas fire pit.

If flames lift away from burner or backfire happens, or produce thick black smoke, the fire pit should be turned off immediately. The fire pit should not be operated again until the unit is serviced and/or repaired by a qualified service technician.

⚠WARNING:

Improper lighting procedure may cause fire explosion, and result in property damage, personal injury, or loss of life.

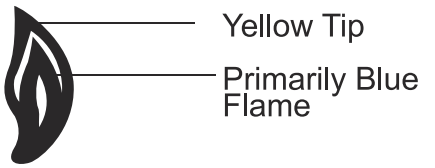

ASSEMBLY INSTRUCTIONS

SECTION 2: IGNITION TROUBLESHOOTING

STEP 1

Wait 5 minutes for any gas to dissipate. Locate the igniter cable under table. Ensure the igniter cable is firmly attached to the gas valve. Follow the ignition sequence again. If still no results after three tries move to step 2 below.

STEP2

Turn the gas cylinder valve to the Closed position. Wait 5 minutes for any gas to dissi-pate. Ensure igniter cover is not covered by glass rocks. This helps air circulate. Inspect the ignition electrode (under igniter cover) to ensure it is free from dust and not blocked by glass rocks or other debris. Use a dry clean cloth or tissue to very lightly wipe clean igniter tip.

WHEN YOU PUSH IN THE DIAL KNOB, THE FIRE IS ON, WHEN RELEASE, THE FIRE OFF?

STEP1

Check the thermocouple condition. If it's defective, reaching customer service for thermocouple replacement.

STEP2

Check the thermocouple end nut condition. Tighten the nut if it's loosen.

STEP3

If both 2 parts are in good condition, reaching customer service for details checking

WARNING HAZARD:

USE A TOOL OR WEAR GLOVES TO MOVE GLASS ROCKS. AVOID BLOWING GLASS DUST IN THE AIR.

After waiting for 5 minutes, visually inspect the spark by rotating the knob to high without turning the gas back on at the cylinder. Ensure the spark gap is 3 - 5mm (1/8" - 3/16") from the burner port and has a clear path. Once you ensure the igniter is operating properly repeat the ignition sequence in section 2.

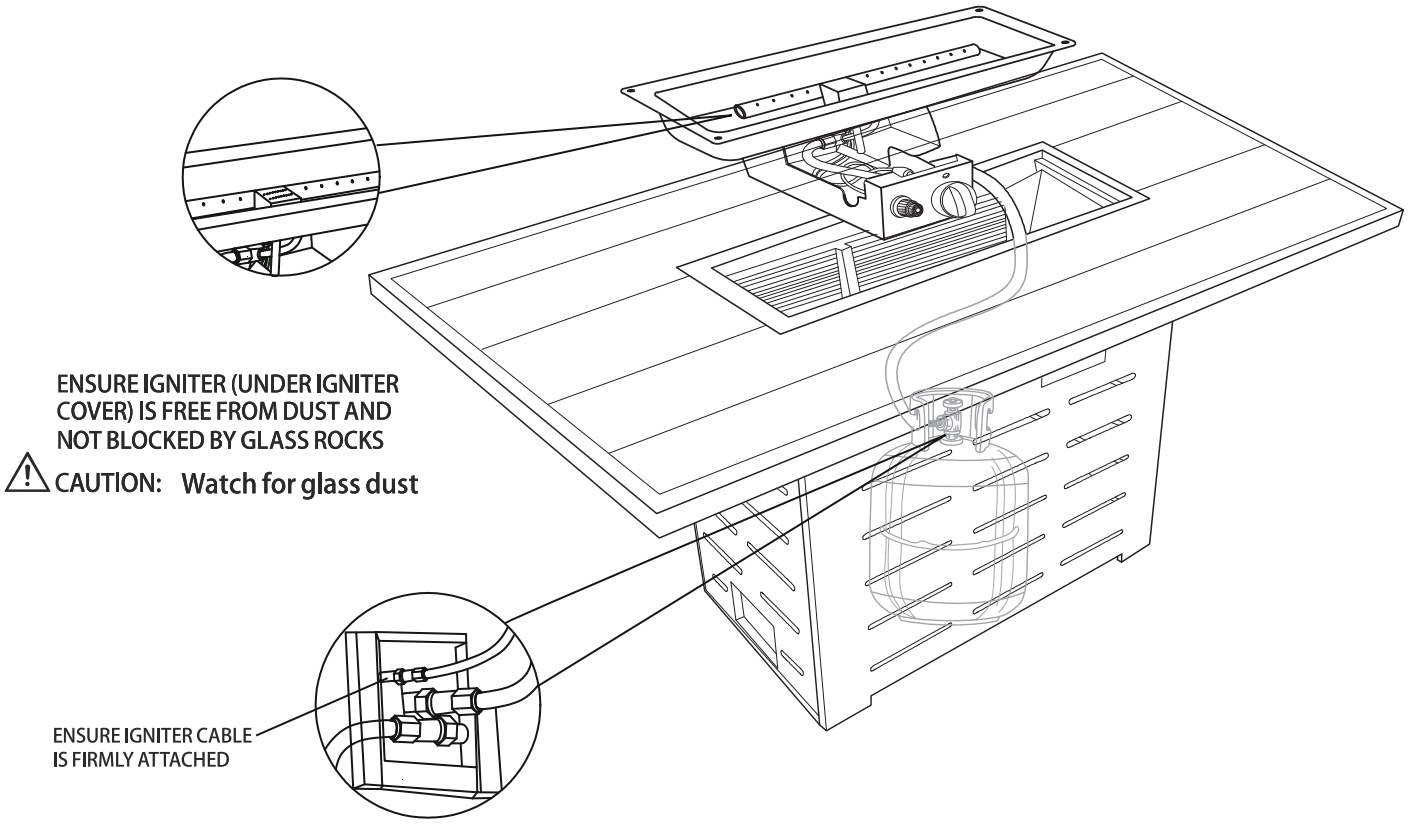

ASSEMBLY INSTRUCTIONS

SECTION 3: GOT A LOW FLAME?

STEP 1

Check propane level. If less than half full replace the cylinder.
Repeat the ignition sequence in section 2.

STEP 2

If the propane cylinder is full and your Fire Table experiences low flame, or flame height does not appear to be normally adjusted by the gas knob, it is likely that the excess flow safety device has been tripped in the hose regulator.

CORRECTIVE ACTION

a.Close propane cylinder valve.
b.Open and then close Fire Table gas knob valve to release pressure.
c.Disconnect and reconnect the propane cylinder valve connection.
d.Slowly open propane cylinder valve.
e.Perform Leak Test and follow Ignition sequence.

SECTION 4: EXTINGUISHING THE APPLIANCE

STEP 1

Access the Fire Table interior. Turn the gas cylinder valve to the "Closed" position.

STEP 2

Turn the gas knob on the Fire Table to the "OFF" position by pushing and turning the knob clockwise.

STEP 3

Allow unit to cool for at least five (5) minutes before relighting.

SECTION 5: FIRE TABLE MAINTENANCE

Your Fire Table requires periodic maintenance to keep it in good running order. Follow the steps below to ensure your appliance will provide you with the best possible performance:
1.Keep your Fire Table out of the rain and store it in a dry place. Fire table accessories such as covers can be purchased at our store or you can contact our customer service team.
2.This device has been engineered to provide the maximum amount of heat and comfort. If you experience any signs of your propane cylinder "freezing off" or start to experience lower flames than usual, please simply turn the burner control setting to low for 5–10 minutes, or replace the cylinder with a full one.
3.Ensure that you clean the top of your Fire Table after every use to keep it looking GREAT. Simply use warm soap water to wipe down your Fire Table to keep it clean. Do not use abrasive cleaners. Especially, DO NOT USE PETROLEUM BASED SOLVENTS TO CLEAN YOUR FIRE TABLE AS THIS WILL DESTROY YOUR WICKER RESIN TABLE MATERIAL.
4.Remove any debris and leaves which may have accumulated in your Fire Table burner tray before igniting.

ASSEMBLY INSTRUCTIONS

WARNING NOTES:

- Expected burn time; the anticipated burn time for your Fire Table using a full 20 lb (9kg) propane cylinder is between 12 and 18 hours depending on where the flame height is set.
- This is NOT a toy.
- The fire table will become extremely hot during operation! - DO NOT TOUCH THE BURNER TRAY OR GLASS ROCKS while fire table is in operation!
- Do not place ANY cover on the fire table while the fire table is in operation.
- Do not rest anything on or over the burner tray while the fire table is in operation.
- The fire table is a decorative gas appliance only. NEVER cook food on the fire table. Do not use any type of accessory as a means to cook or keep food warm on the fire table.
- Wait at least 30 minutes after turning off the fire table to allow it to cool down before touching the burner tray, or glass rocks, or putting ANY cover over the fire table.
- Please ensure that all adults and children who use or are near a unit in use are aware of the hazard of high-surface temperatures present on the unit during use and should use caution and stay away to avoid burns or clothing ignition.
- Children should be supervised at all times when using this unit without exception.
- Do not place any objects other than supplied rocks inside the burner component of the Fire Table.
- Do not add wood or any other materials to the fire.
- Your Fire Table is designed to safely combust propane only.
- Do not connect to a remote gas supply. Consult a certified gas technician.
- Do not use this appliance if any part has been under water. Immediately call a qualified service technician to inspect the appliance and to replace any part of the control system and any gas control which has been under water.
- Do not leave this appliance uncovered in the rain.
- Always inspect and clear all valve and gas orifices of any foreign debris including spider webs prior to lighting.
- Never store a spare LP cylinder inside the LP cylinder compartment.