Single Handle Pull Down Kitchen Faucet

Note: Style may vary by model.

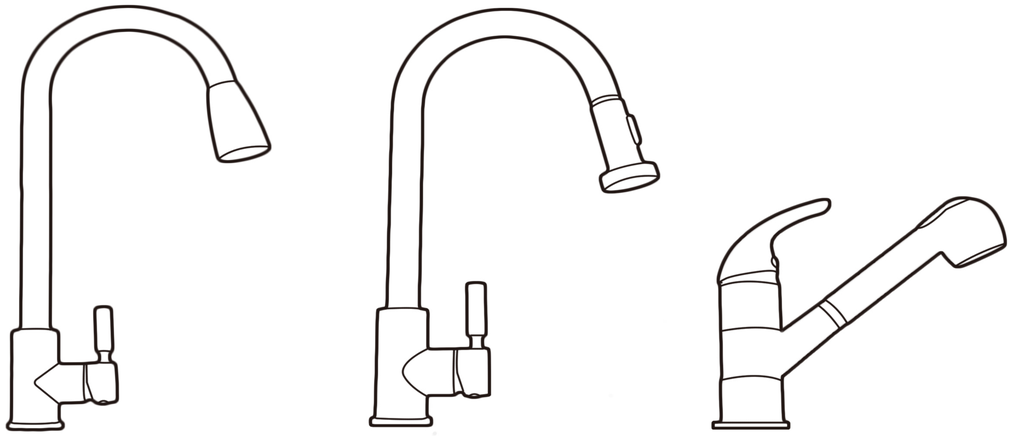

Before Installation

A. Make sure you have all necessary parts by checking the diagram and parts list.

B. Turn off the hot and cold water supply at the angle stops and turn on the old faucet to release any built up pressure. Remove existing faucet. Clean sink or countertop in preparation for new faucet.

C. Shut off angle stops.

D. Pre-drilled hole size requirement: 1-3/8"(min) - 1-1/2" (max)
Max countertop thickness without deck plate: 1-1/2" (1 hole install)
Max countertop thickness with deck plate:1" (1, 2 or 3 hole install)

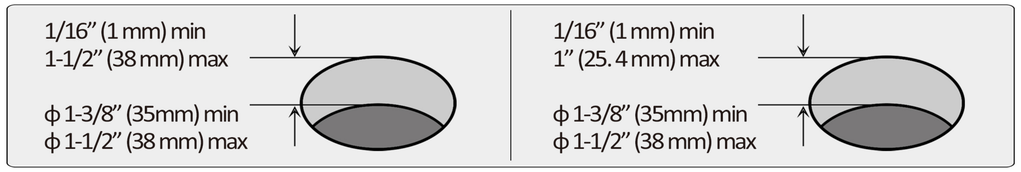

Tools you will need:

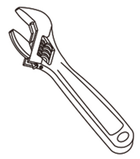
Adjustable Wrench

Safety Goggles

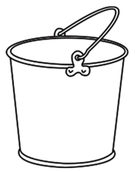
Bucket

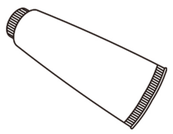
Silicone Sealant

Diagram and Parts List

Note: Style may vary by model.

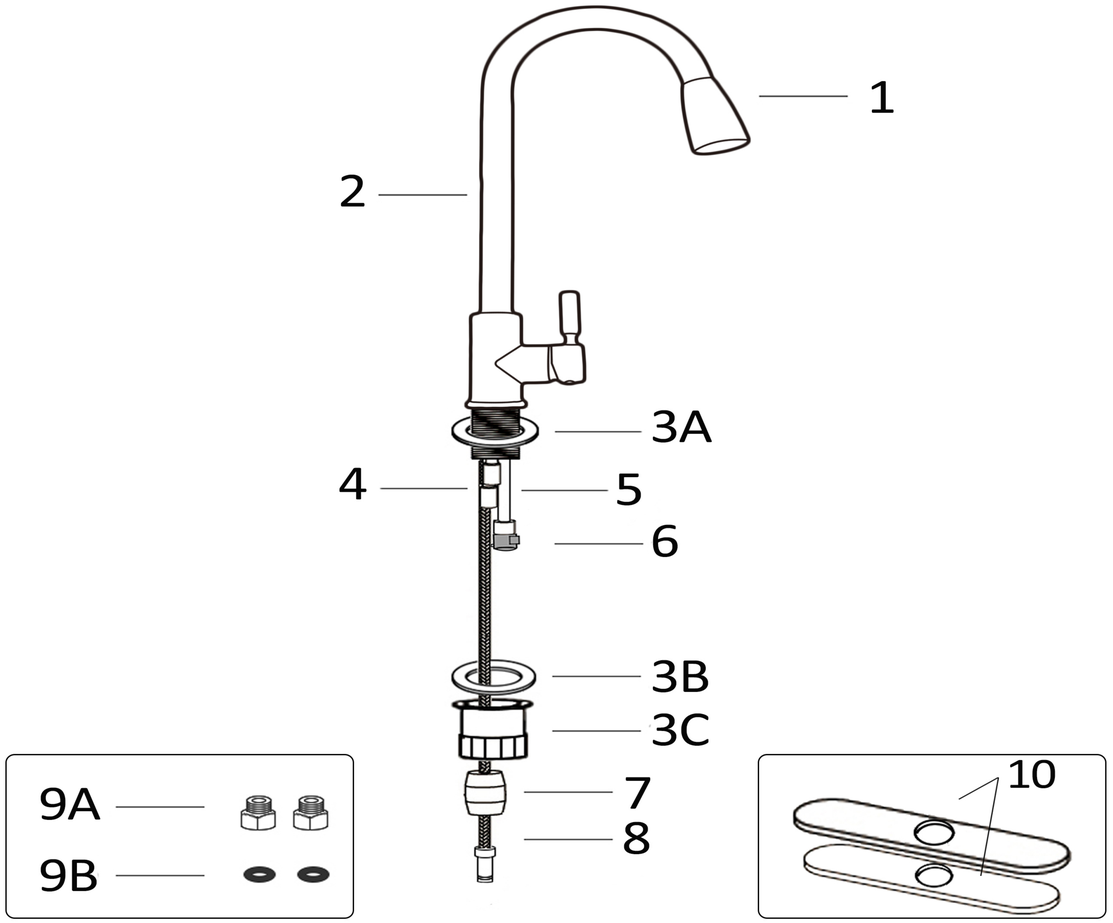

1. Sprayer Head
2. Faucet Body
3. Mounting Hardware
   A. Rubber Washer
   B. Rubber Washer
   C. Plastic Mounting Nut
4. Hot & Cold Waterlines
5. Supply Hose
6. Quick Connect
7. Weight
8. Sprayer Hose

Option(Not included with all models):

9. Additional Parts
   A. 1/2" adapters
   B. Rubber Washer
10. Deck & Putty Plate

Rights of product modification such as dimension without notice is reserved.

Single Handle Pull Down Kitchen Faucet

Note: Style may vary by model.

1 **Without Deck Plate**

Slide the washer(o-ring) to faucet base. Insert the faucet through sink hole.

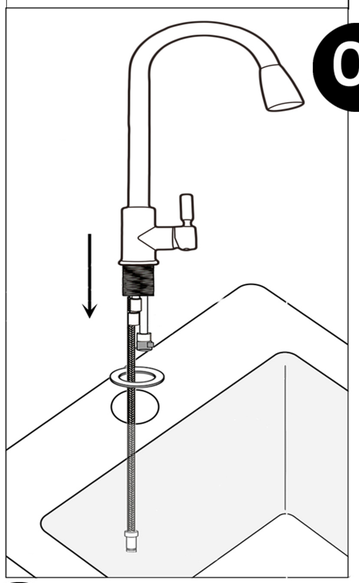

Or

1 **With Deck Plate**

Slide the washer(o-ring), deck & putty plate to faucet base. Insert the faucet through sink hole.

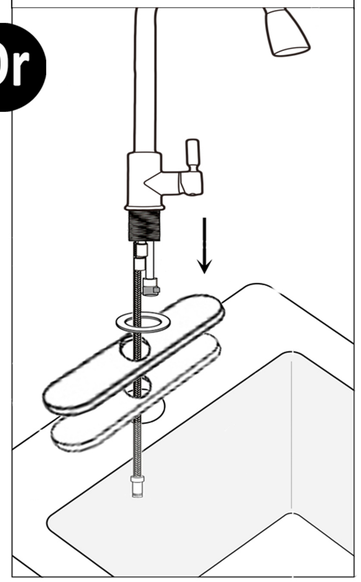

2 Put the washer on screw nut. Screw the nut onto thread. Brefore tighten, rotate the hand to the side you like, then tighten the nut securely.

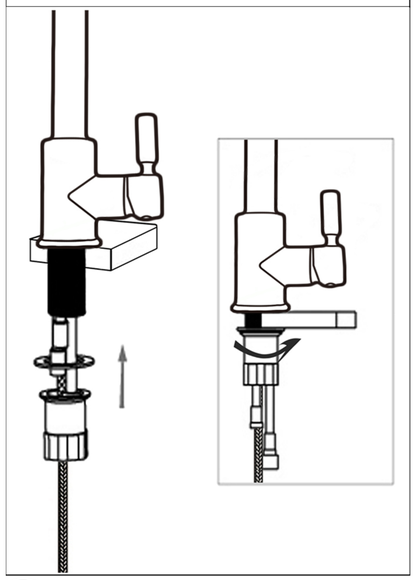

3 Correct and tighten hot and cold water hose.

Note: a small rubber o-ring is put into each connector of the hot & cold waterlines, please check before tighten hot and cold water hose.

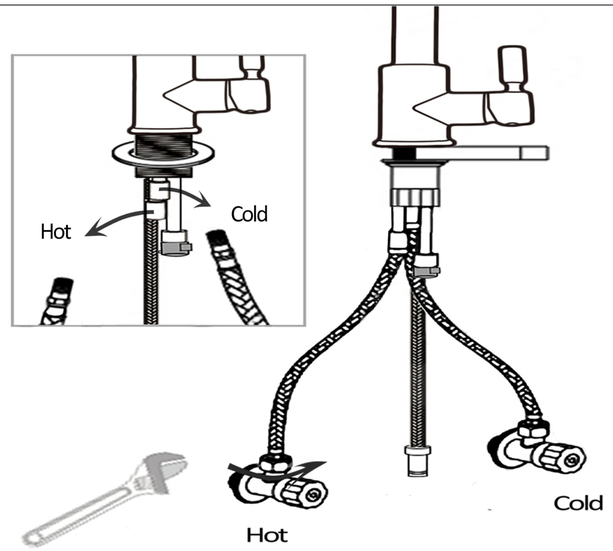

4 Push the sprayer hose to the quick connect.

Note: please do not use the tape for the quick connect.

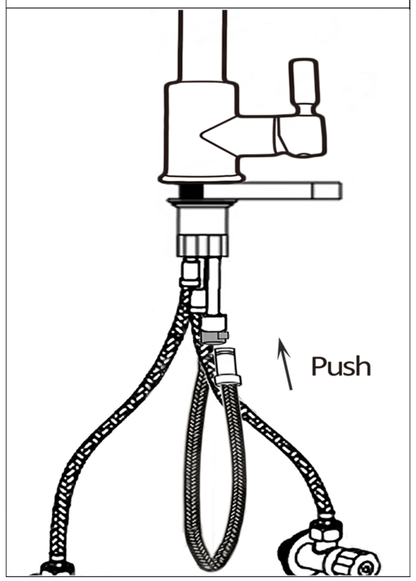

5 Open the weight, put it on sprayer hose. Then close it.

Note: To make sure that the pull out hose go back smothly, you need to adjust the weight in right position.

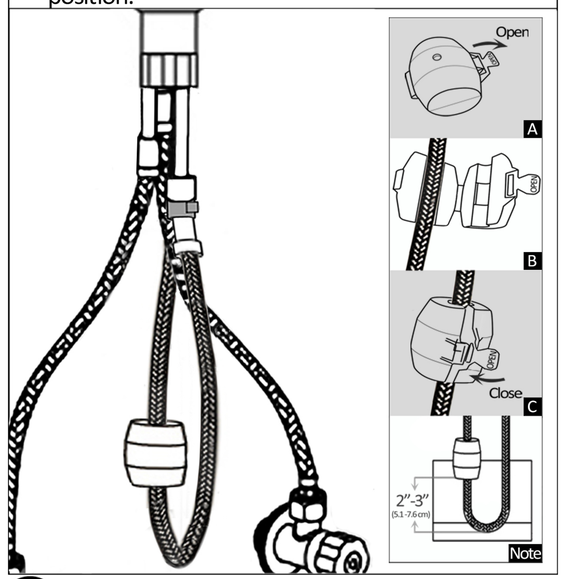

6 Place handle in off position. Screw off the sprayer head.

Note: Don't lost the o-ring filter.

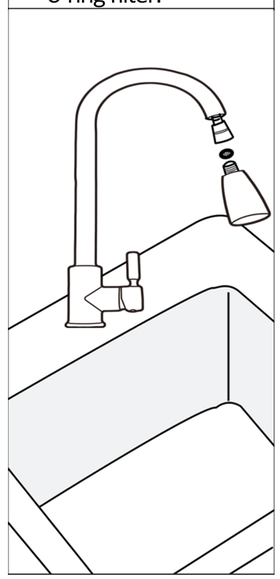

7 Turn on water supply. Check for leaks and flush hoses and flush the faucet for 30s.

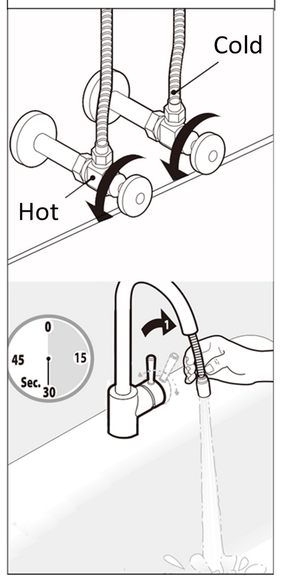

8 Turn off the faucet, screw the sprayer head back the the sprayer hose.

Note: Don't forget the o-ring filter.

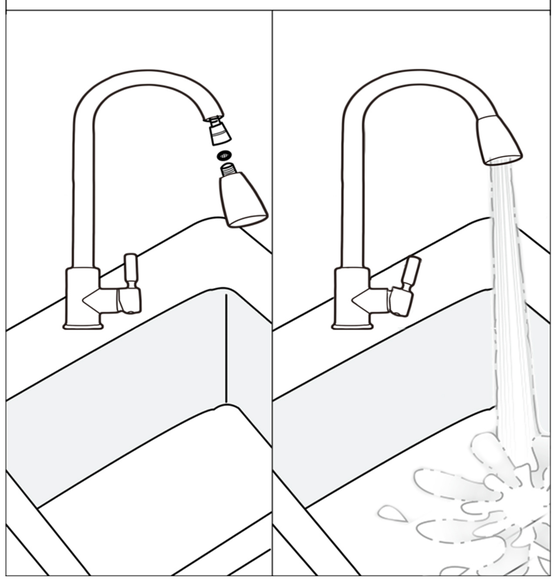

Care and Clean

For best results, keep the following in mind when caring for your faucet:

Use a mild detergent such as liquid dish washing soap and warm water for cleaning. Do not use abrasive cleaners that may scratch or dull the surface.

Carefully read the cleaner product label to ensure the cleaner is safe for use on the entire surface.

Always test your cleaning solution on an inconspicuous area before applying to the entire surface.

Do not allow cleaners to sit or soak on the surface.

Wipe surface clean and rinse completely with water immediately after cleaning application. Rinse and dry any overspray that lands on nearby surface.

Rights of product modification such as dimension without notice is reserved.