ASSEMBLY INSTRUCTIONS
20 INCH BATH VANITY (COMBO)

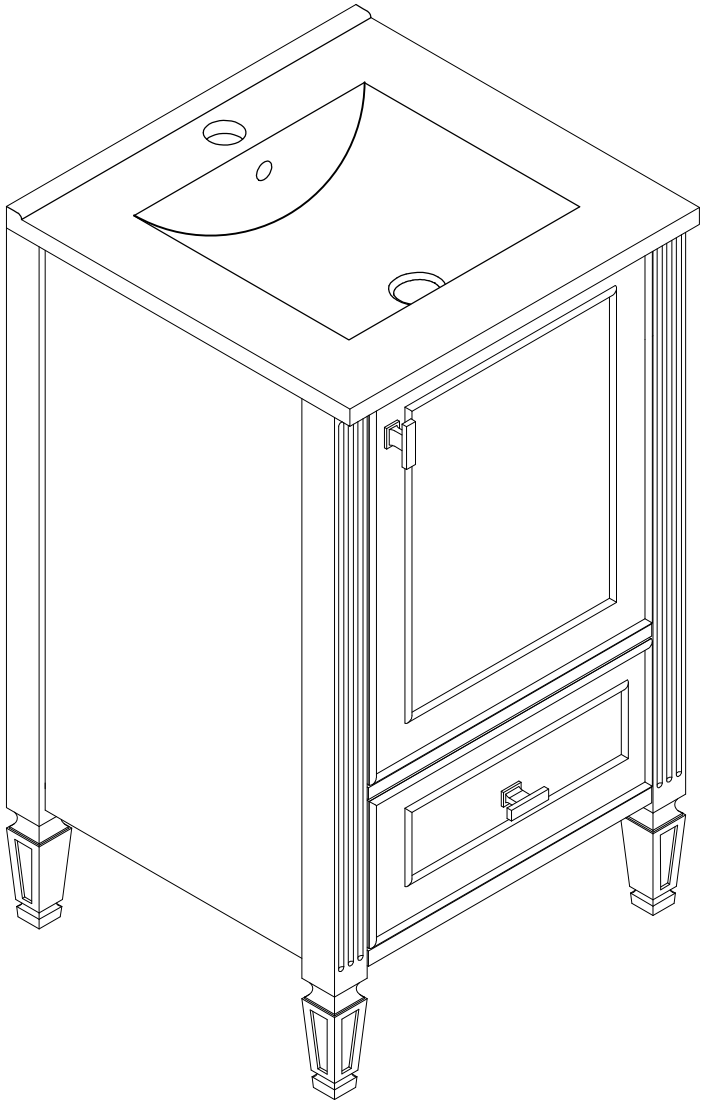

Thank you for purchasing this quality product. Be sure to check all packing material carefully for small parts which may have come loose inside the carton during shipment. Separate, identify and count all parts and hardware. Compare with the parts list to be sure all parts are present.
"DO NOT TIGHTEN SCREWS UNTIL COMPLETELY ASSEMBLED"

*** Use of power tool to assemble this product will invalidate any claim and damage this product making unsafe!!!**
*** Please assemble on a clean soft surface to avoid damage.**



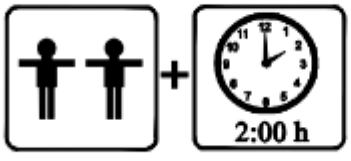

Tools Required

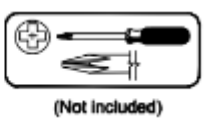
(Not included)

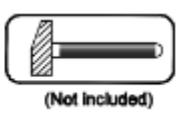
(Not included)

IMPORTANT:
PLEASE READ INSTRUCTION BEFORE STARTING THE ASSEMBLY

Before Installation

Important – Please read these instructions fully before starting assembly

Thank you for purchasing this quality product. Be sure to check all packing materials carefully for small parts, which may have come loose inside the carton during shipment. Identify and count all items according to the PARTS LIST and/or HARDWARE LIST shown below. Check you have all the components and tools listed on the following pages.

- We recommend that you assemble this product with the assistance of another person; this will make the assembly easier, and will help eliminate damage to the product or injury to persons during assembly.
- Please do not over tighten screws or bolts until the assembly is completed.
- Keep children and animal away from the work area, small parts could choke if swallowed.
- Please put all parts on a non-abrasive floor before assembly,and follow the assembly steps to assemble your newly purchased product correctly and efficently.

Cam Lock Assembly Instructions

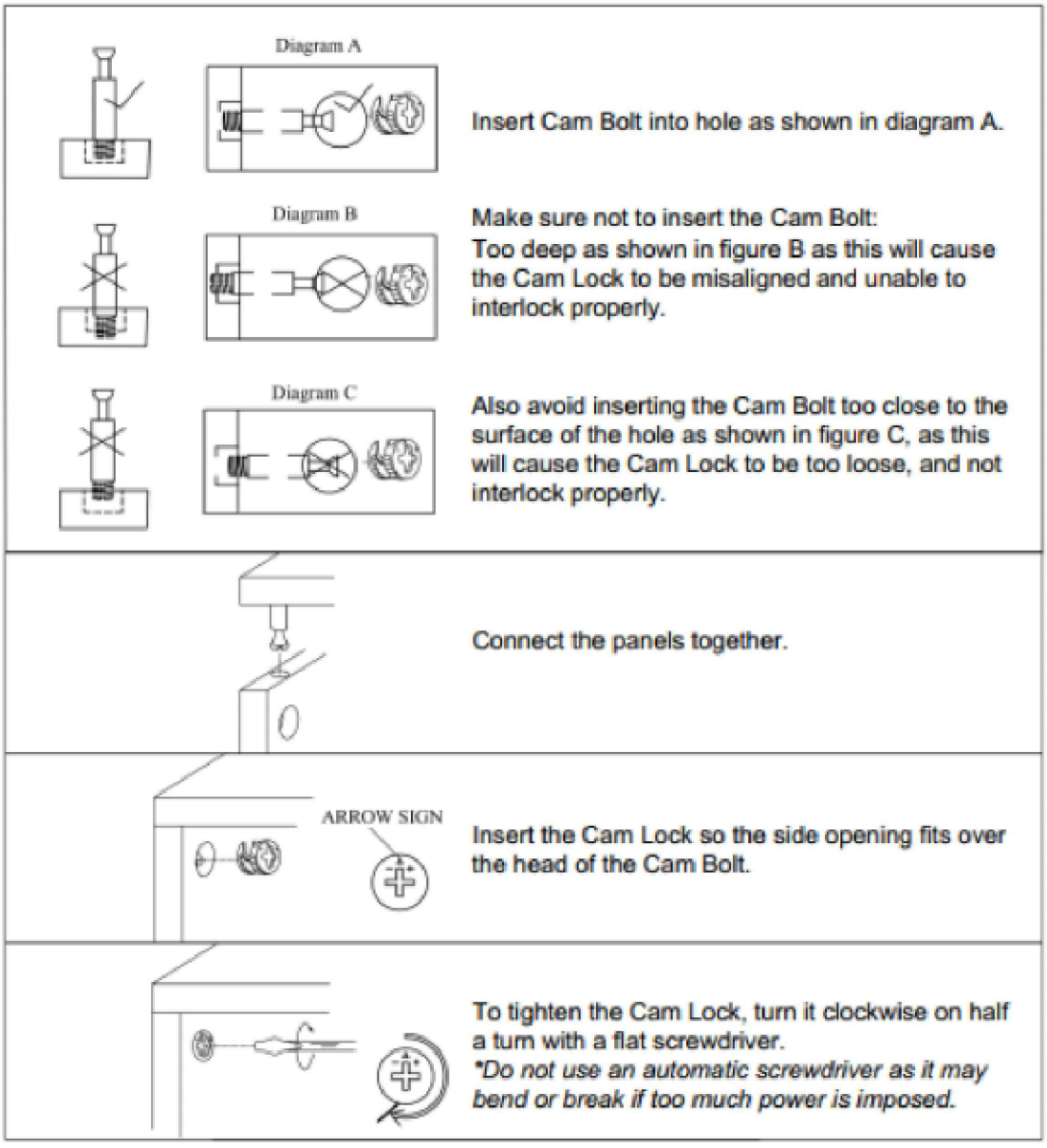

Detail View - CABINET

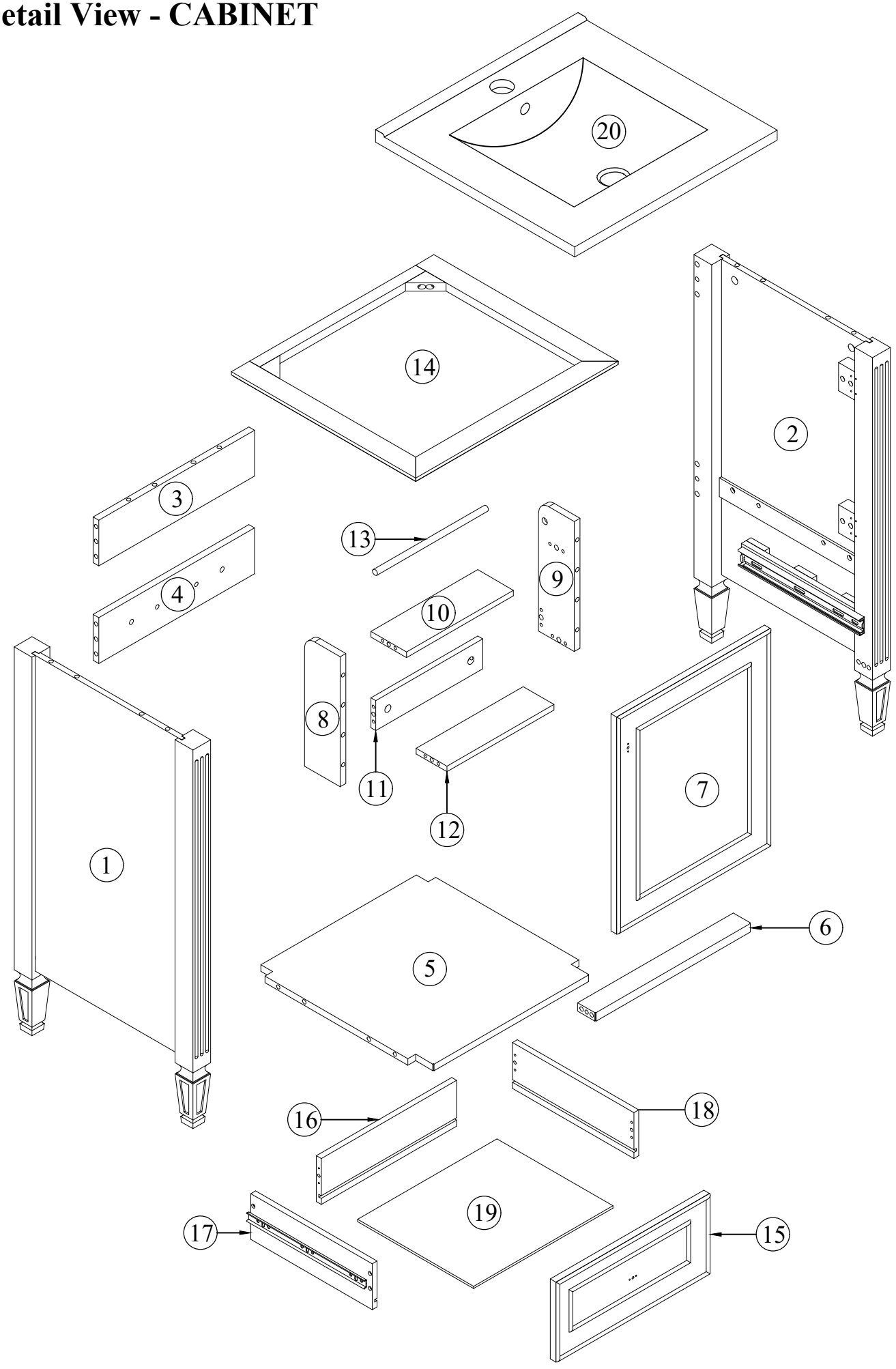

Identifying the Hardware-Identify the hardware using the illustrations below.

Part List

1 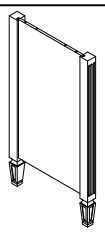 Side Panel (L) - 1pc	2 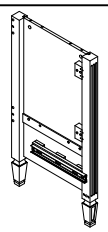 Side Panel (R) - 1pc
3 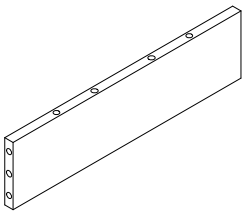 Top Panel Rear - 1pc	4 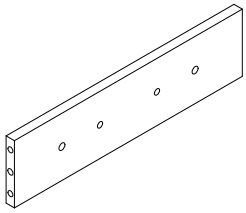 Bottom Panel Rear - 1pc
5 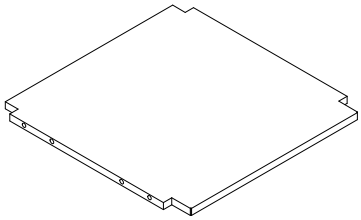 Middle partition panel - 1pc	6 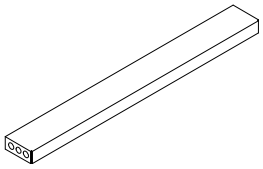 Bottom rail - 1pc
7 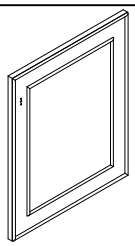 Door - 1pc	8 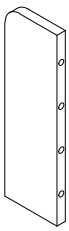 Door Side Panel (L) - 1pc
9 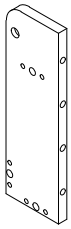 Door Side Panel (R) - 1pc	10 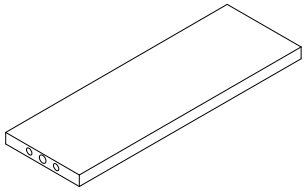 Door Mid Panel - 1pc
11 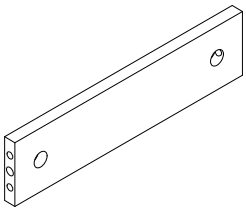 Door Back Panel - 1pc	12 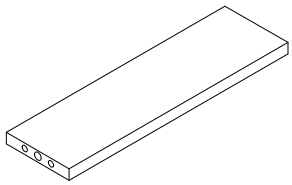 Door Bottom Panel - 1pc

Part List

13 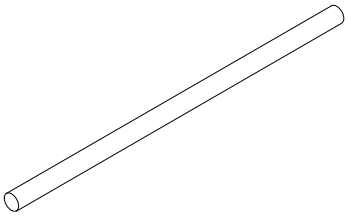 Round Bar - 1pc	14 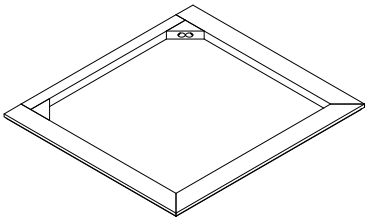 Top Frame - 1pc
15 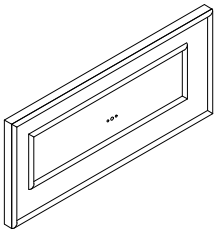 Drawer Front - 1pc	16 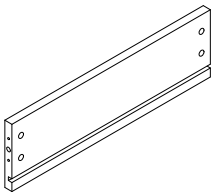 Drawer Back Panel - 1pc
17 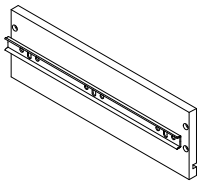 Drawer Side Panel (L) - 1pc	18 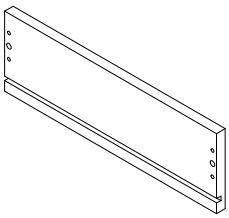 Drawer Side Panel (R) - 1pc
19 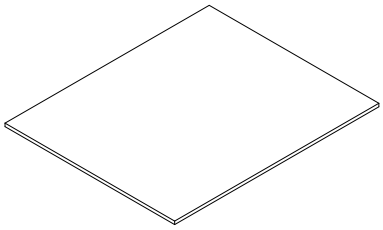 Bottom Drawer Panel - 1pc	20 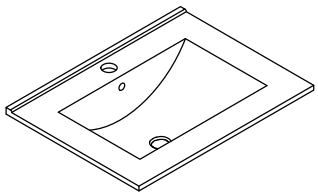 Sink - 1pc

Hardware List

A 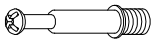 ø6x35mm	B  ø14.5x9mm	C 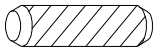 ø8x30mm
Three in one bolts(32+1pcs)	Three in one lock(32+1pcs)	Wood dowel(36+1pcs)
D 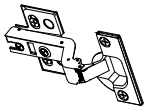	E  ø7xø3.5x15mm	F 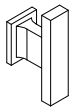
Damping hinge (2pcs)	Flat head screw(12+1pcs)	Handle(2pcs)
G 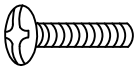 ø5/32"x20mm	H 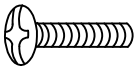 ø5/32"x32mm	I  ø8xø4x32mm
Handle screw(1+1pc)	Handle screw(1+1pc)	Round head screw (8+1pcs)
J  ø6x30mm	K 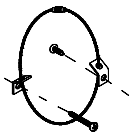	
Wood dowel(4+1pcs)	Anti fall hardware (2sets)	

STEP: 1

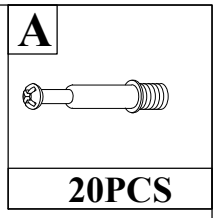
A
20PCS

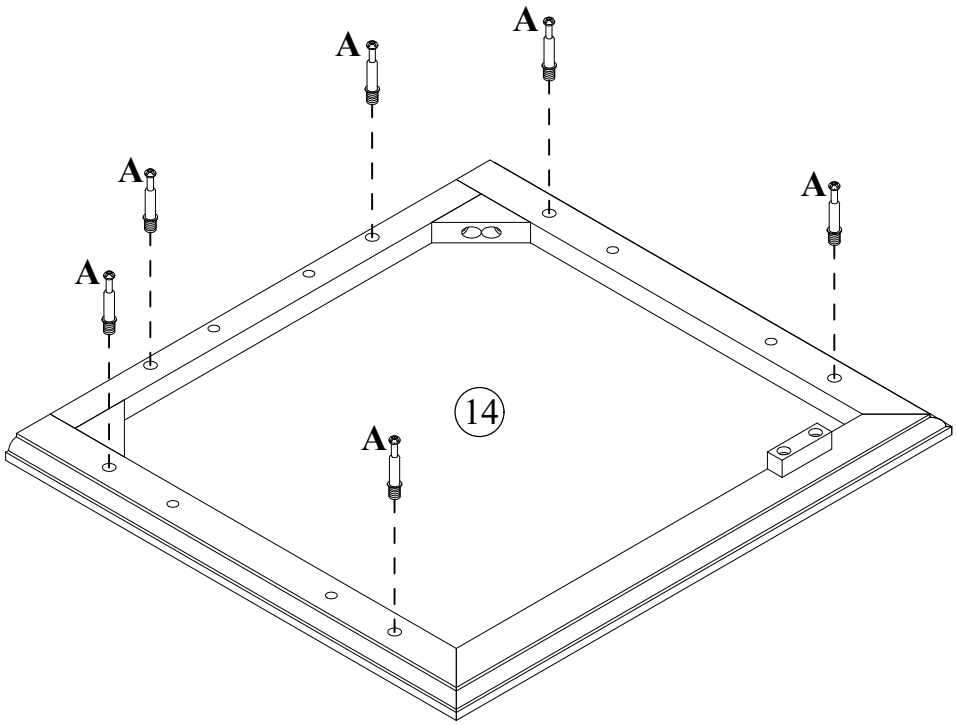
A
A
A
A
A
14
A

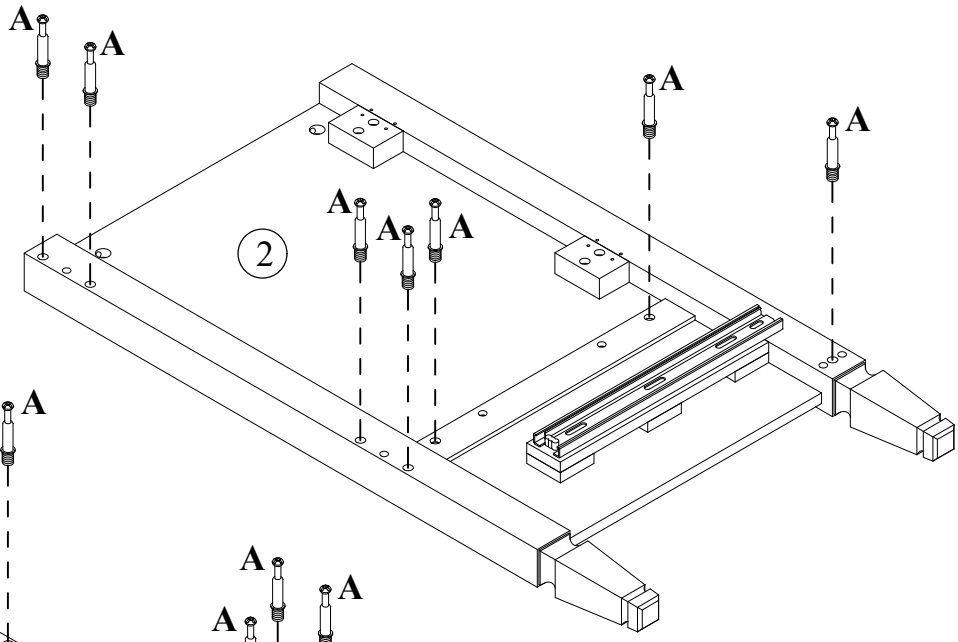
A
A
A
A
A
A
A
2

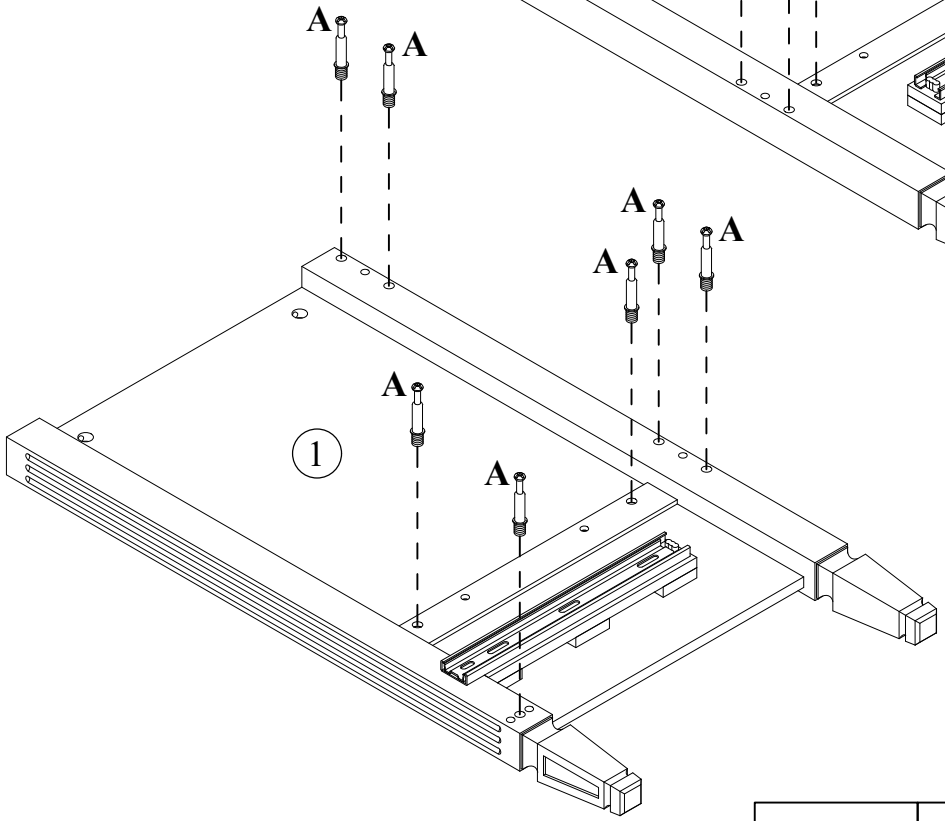
A
A
A
A
A
A
A
A
1

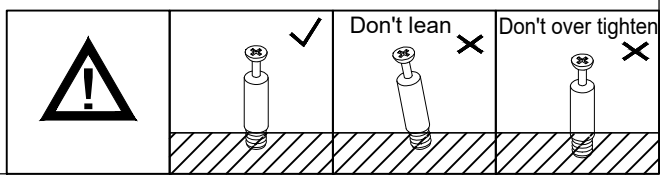
Don't lean
Don't over tighten

STEP: 2

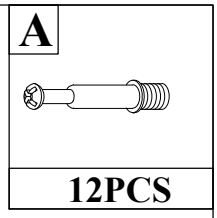

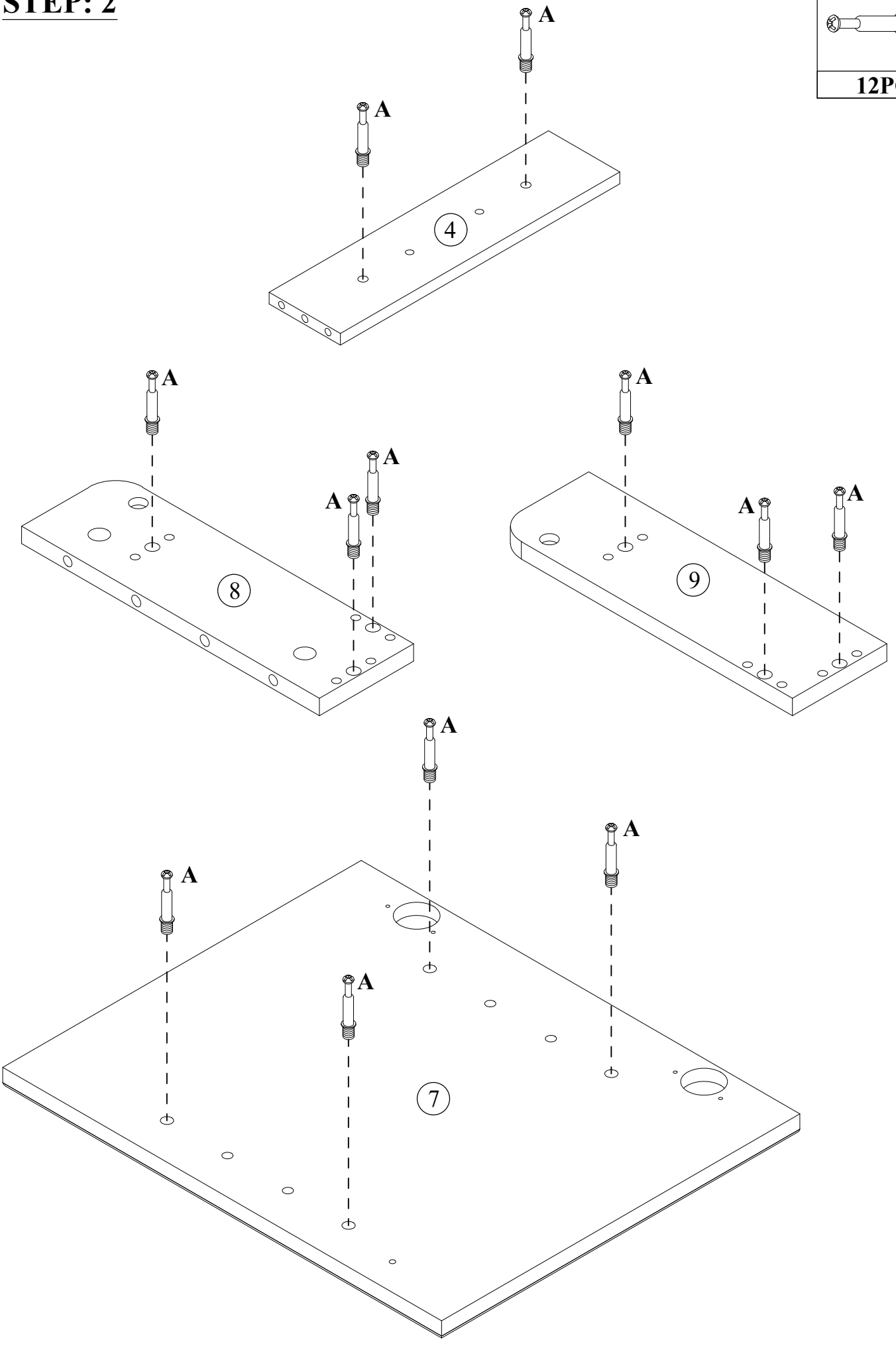

STEP: 3

B	C
	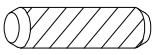
2PCS	2PCS

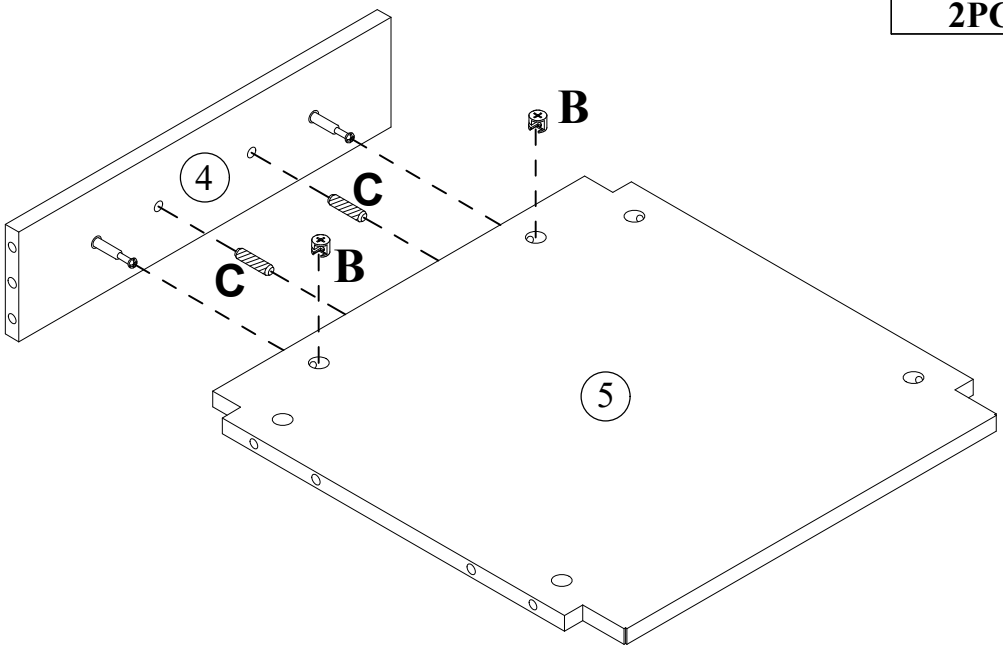

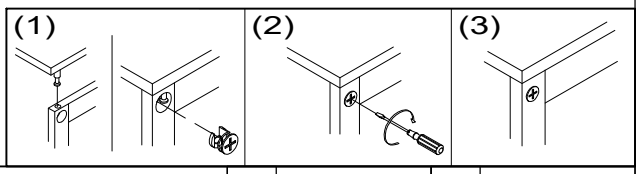

STEP: 4

B	C
	
7PCS	6PCS

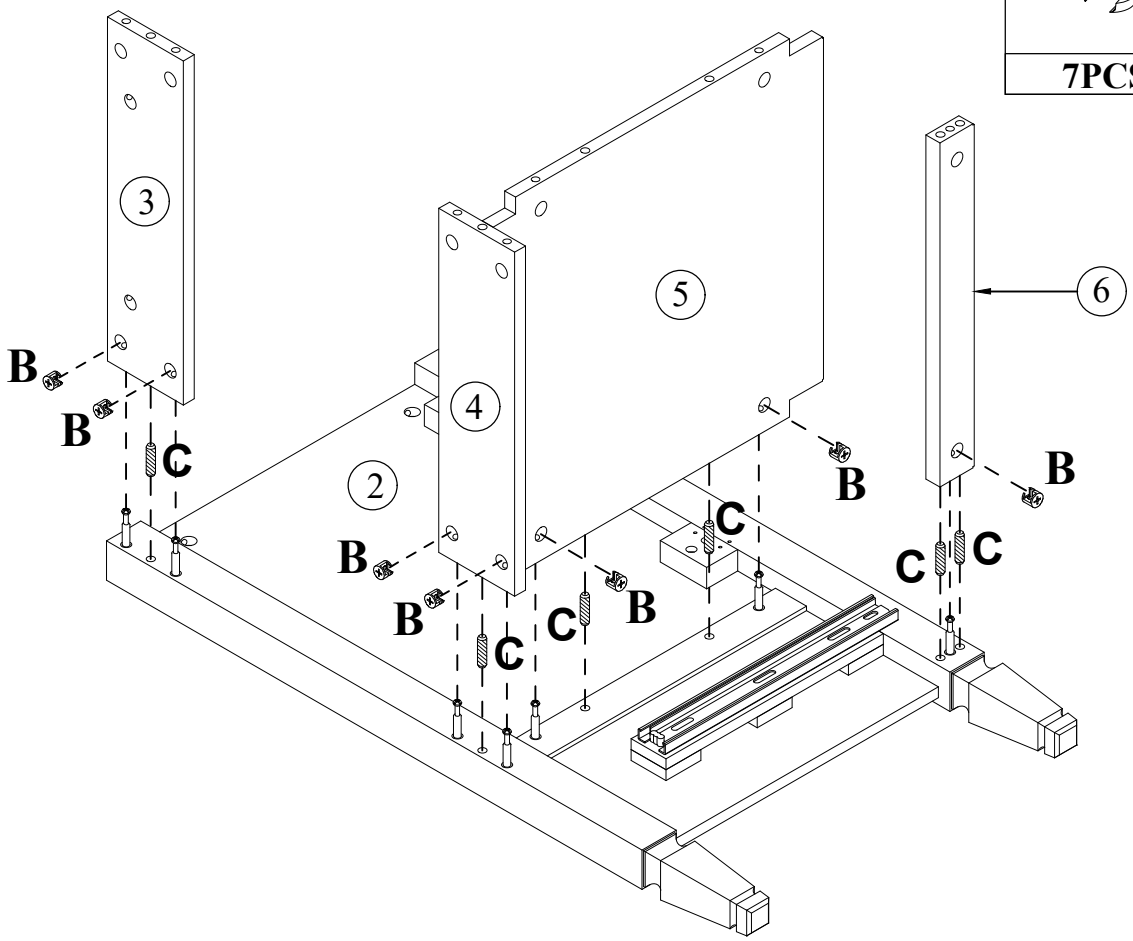

STEP: 5

B	C
7PCS	6PCS

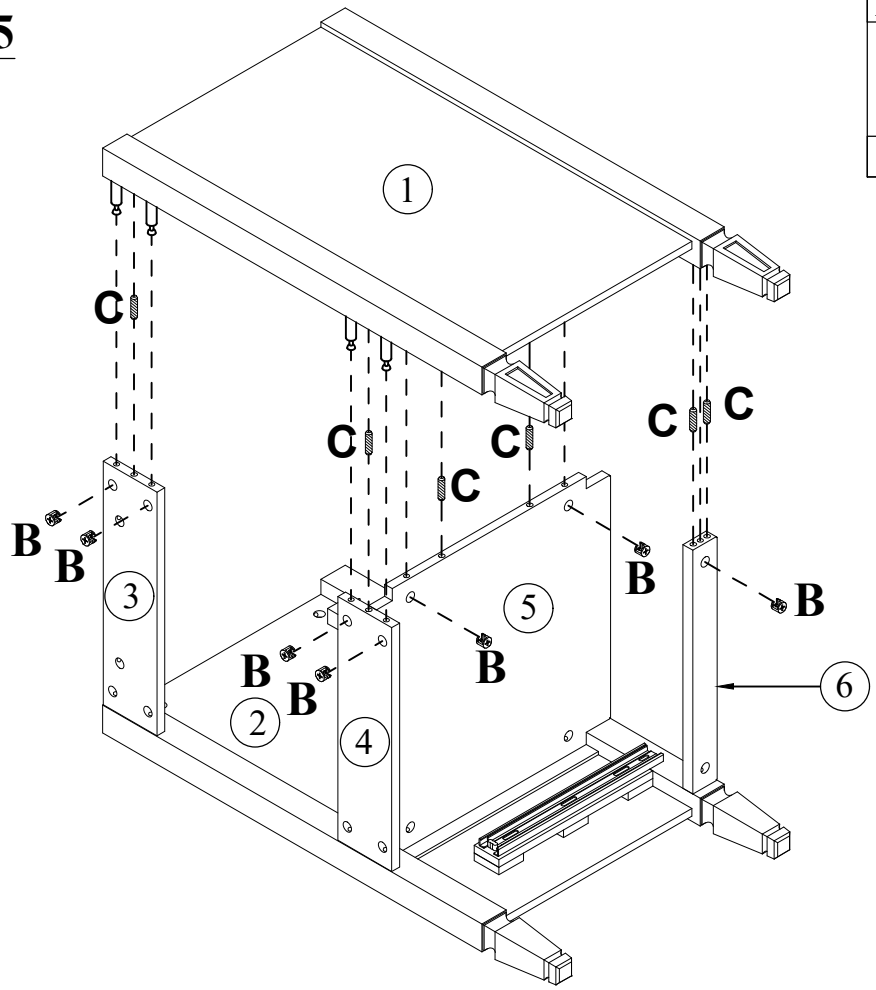

STEP: 6

B	C
6PCS	6PCS

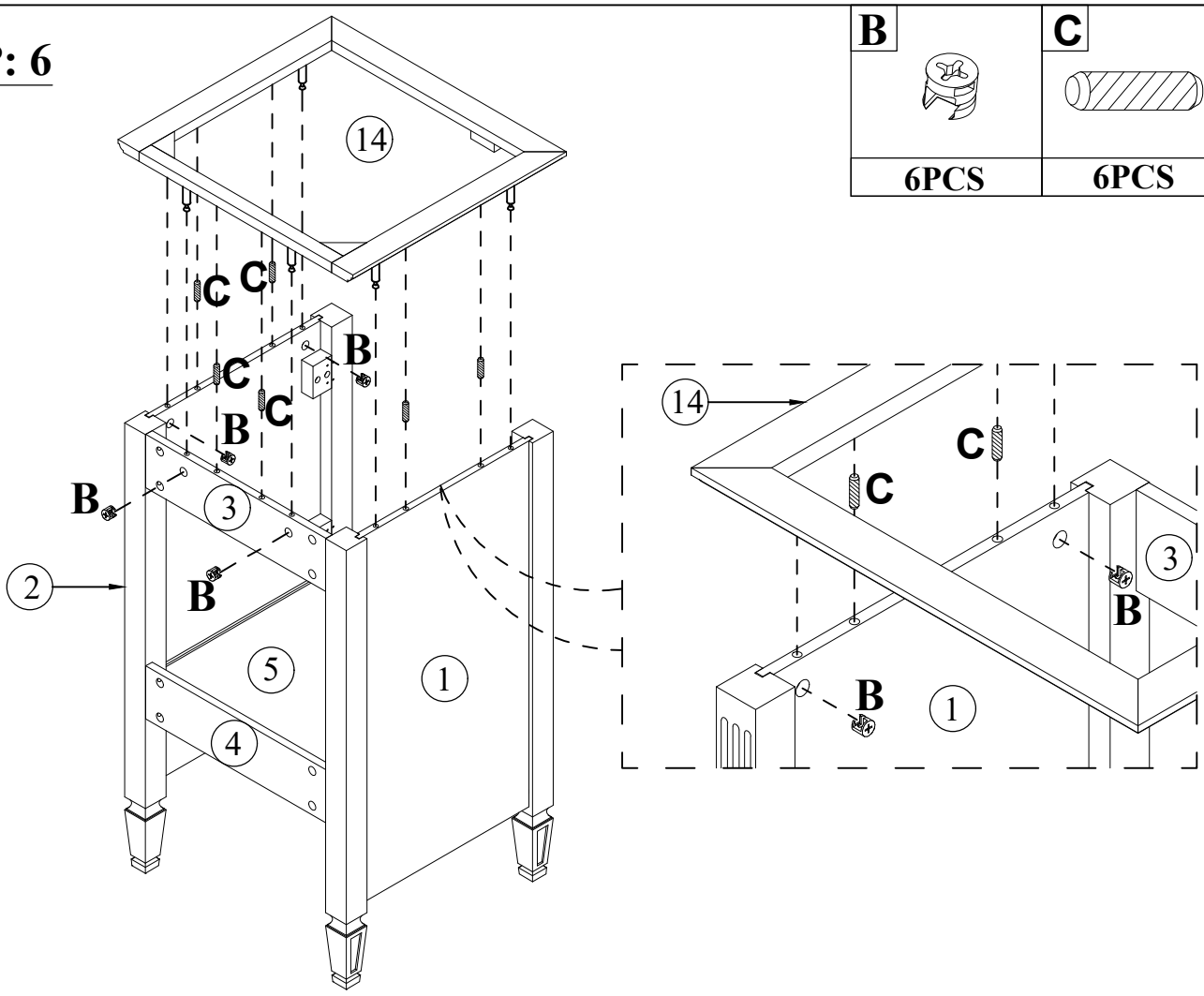

STEP: 7

B	C
	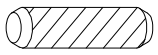
1PC	2PCS

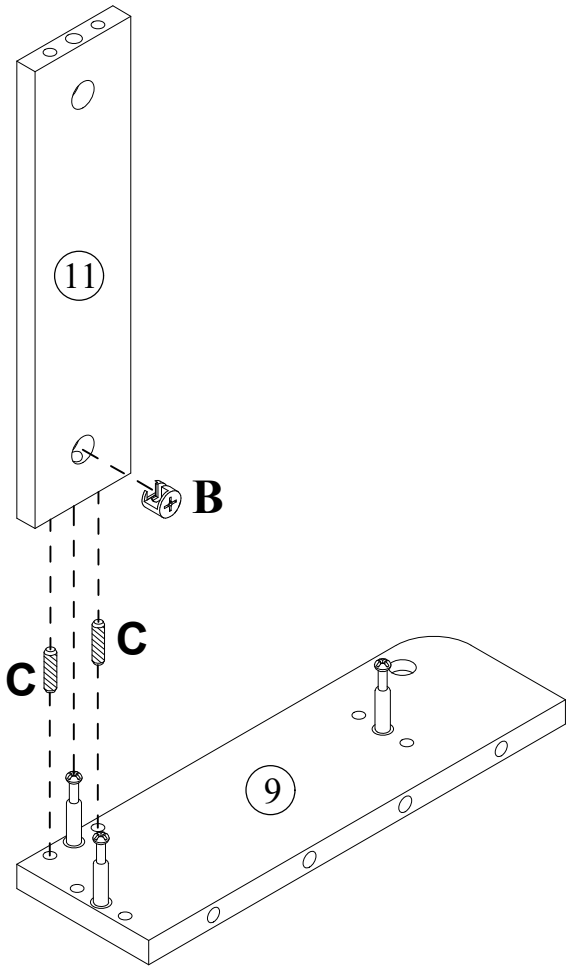

STEP: 8

B	C
	
2PCS	4PCS

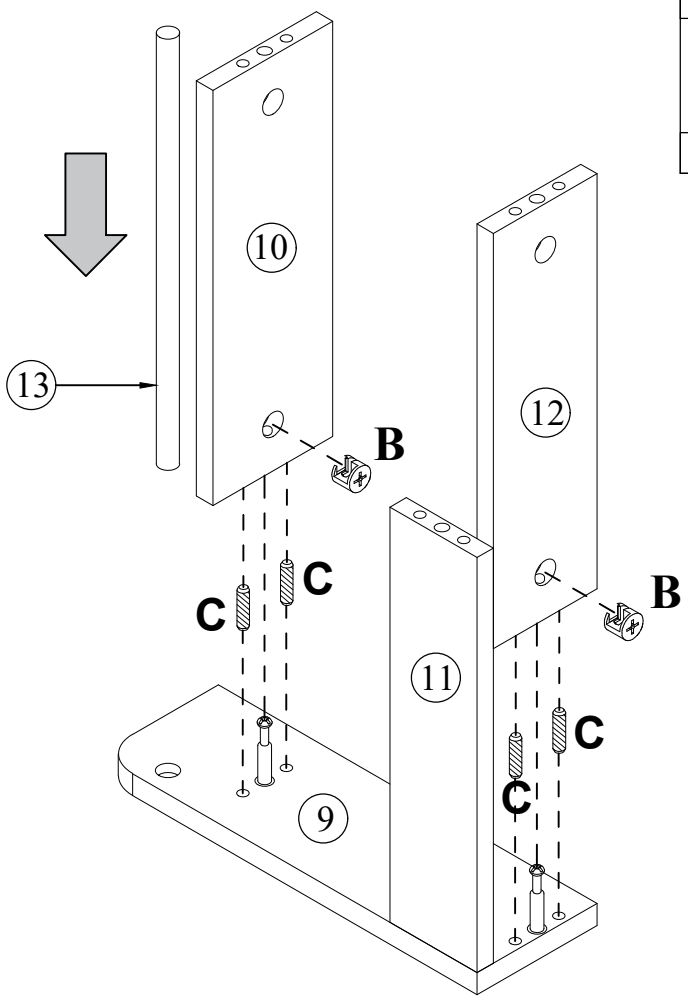

STEP: 9

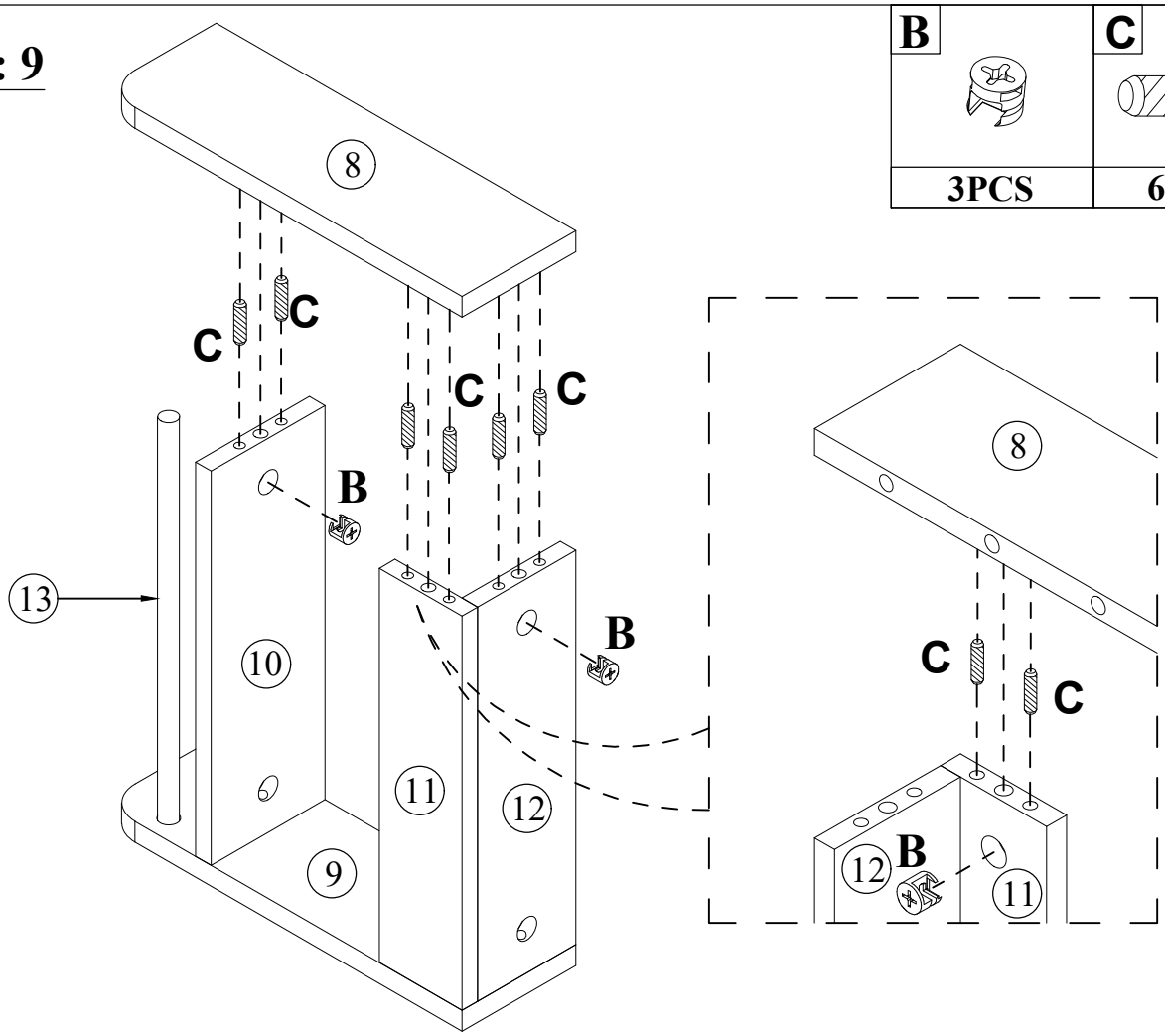

STEP: 10

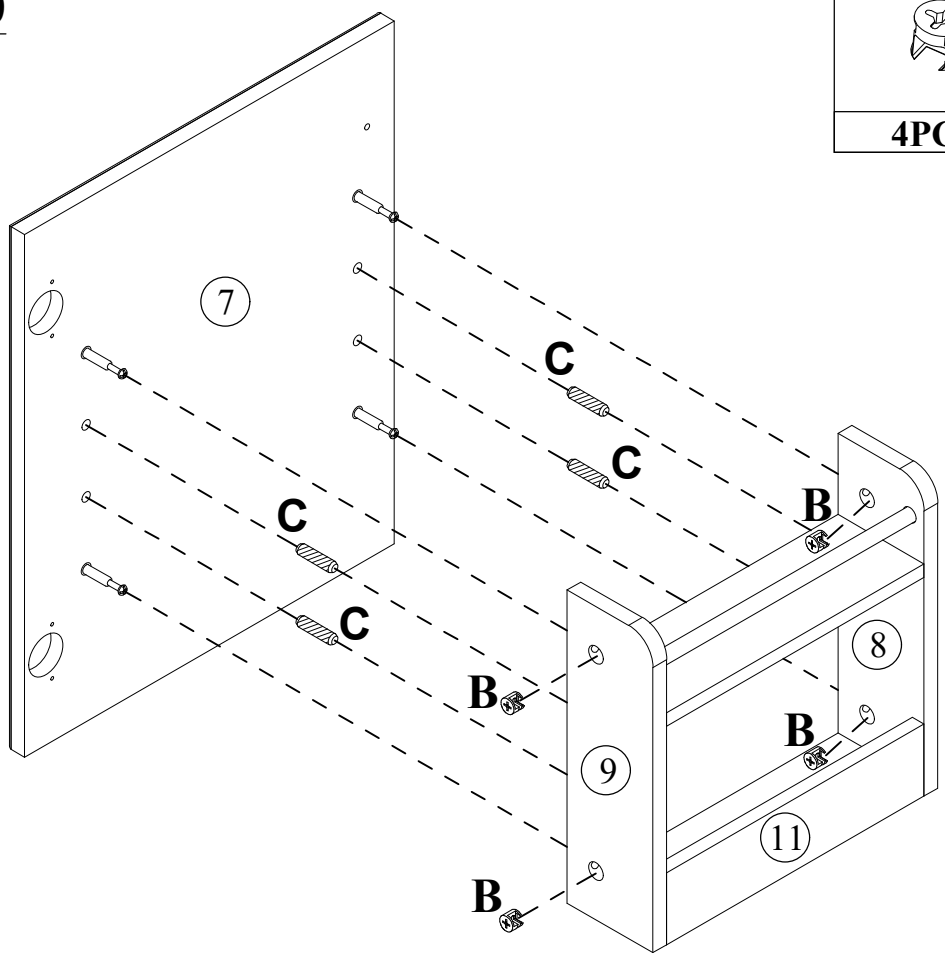

STEP: 11

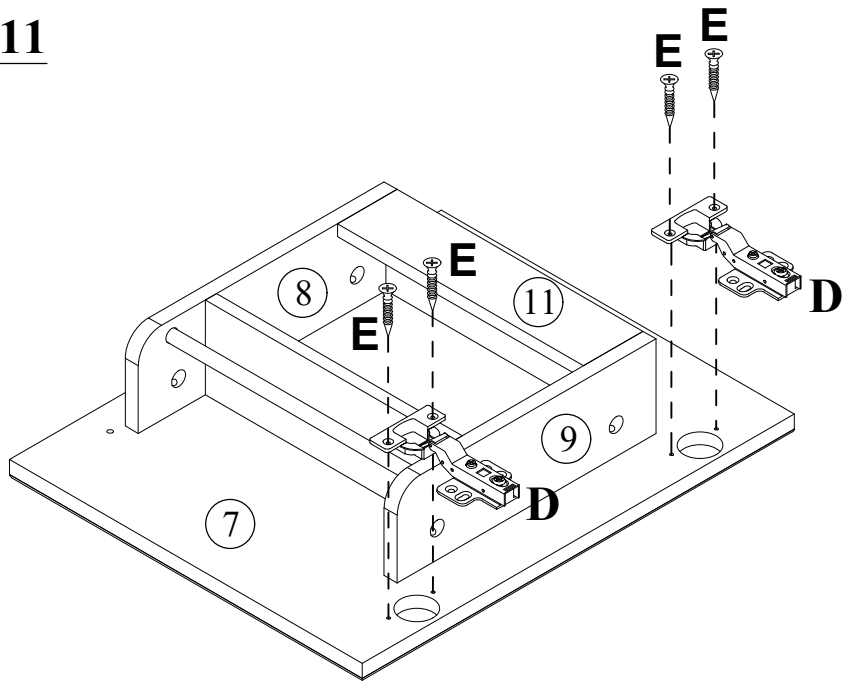

D	E
	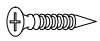
2PCS	4PCS

STEP: 12

F	G	E
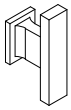	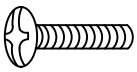	
1PC	1PC	8PCS

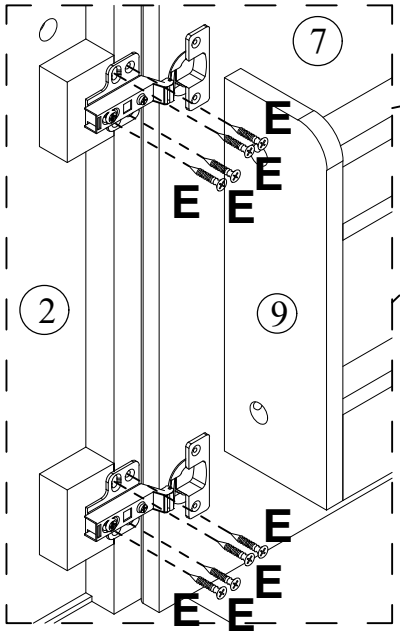

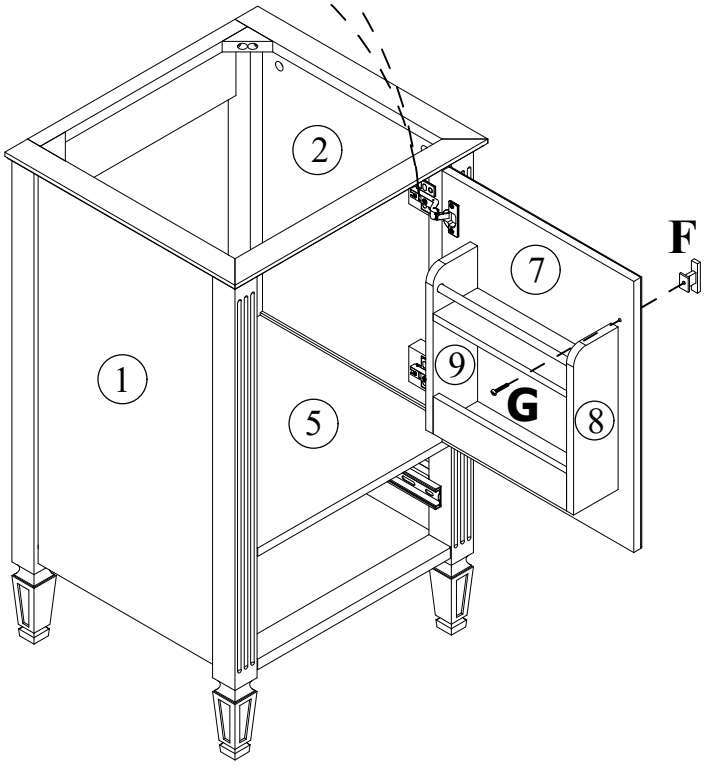

Use the screws to adjust up or down

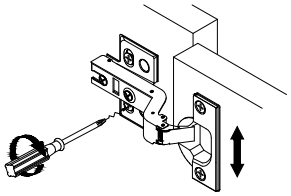

Use the screws to permanent

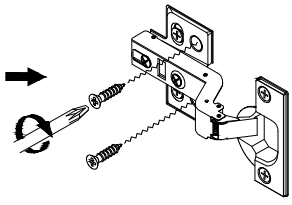

Use the screws to adjust left or right

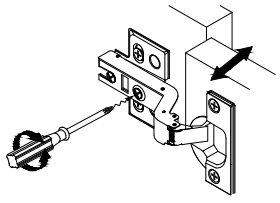

Use the screws to adjust in or out

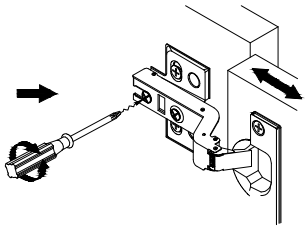

STEP: 13

F	H	I	J
1PC	1PC	8PCS	4PCS

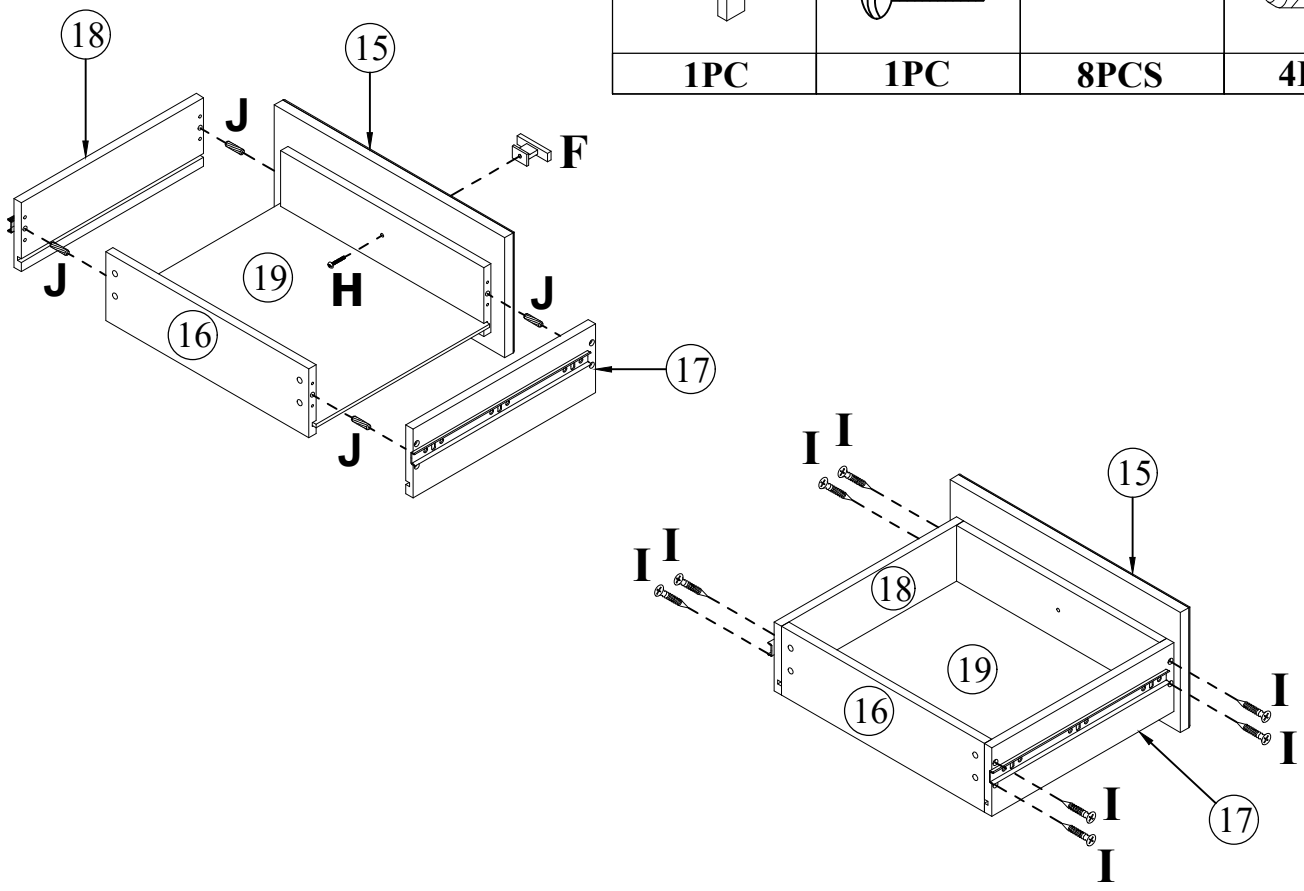

STEP: 14

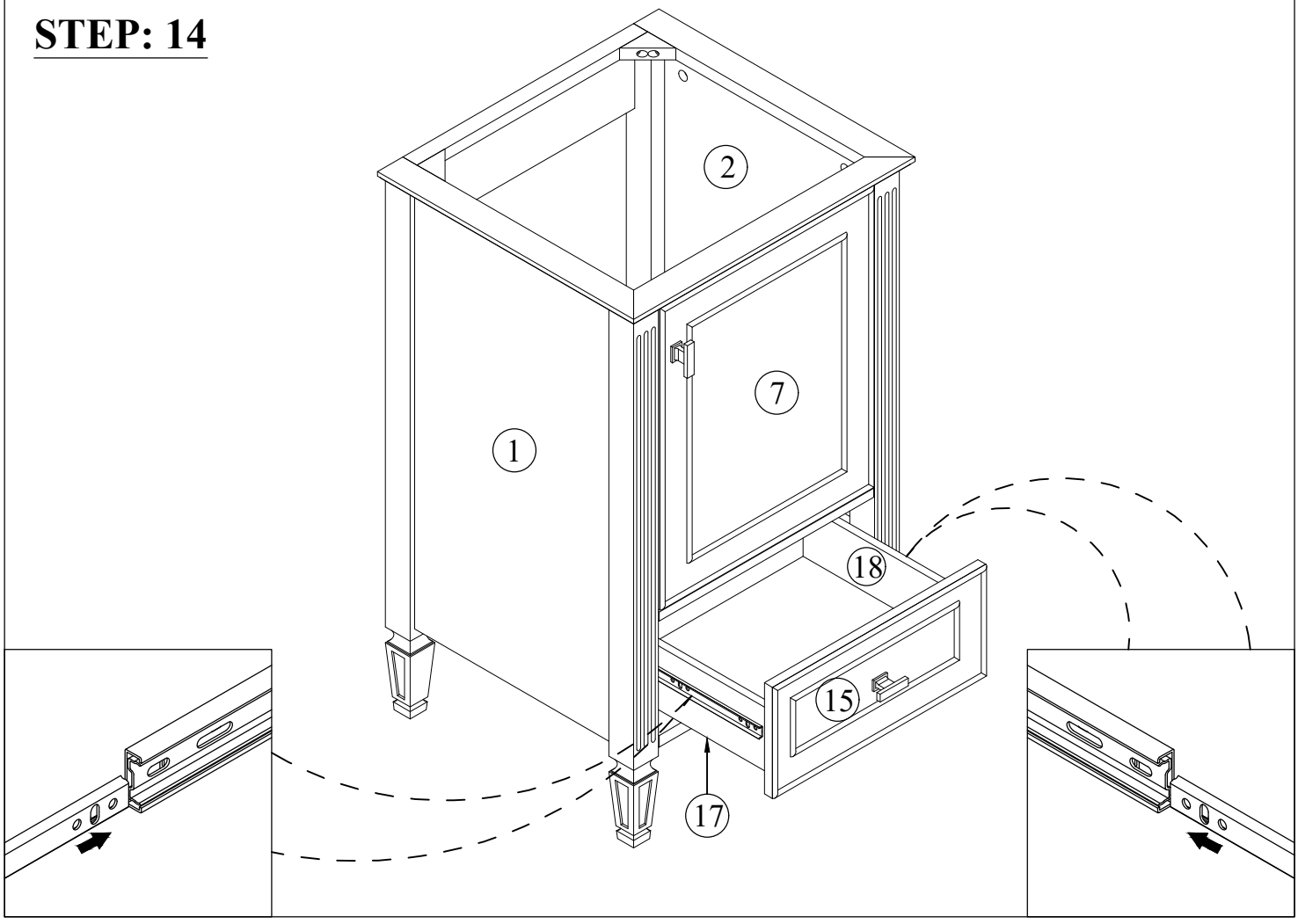

STEP: 15

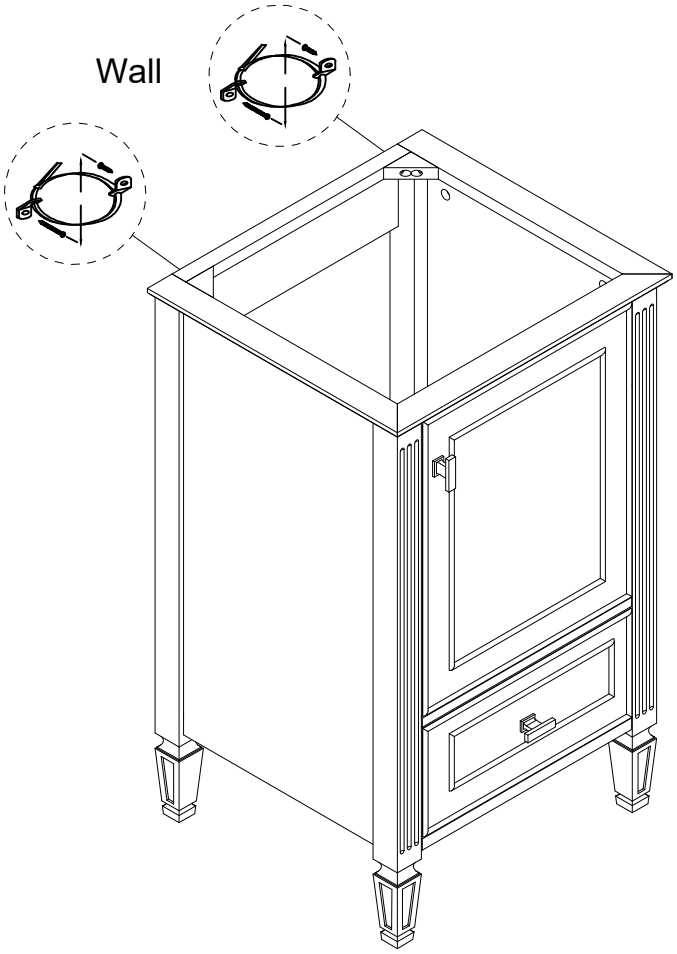

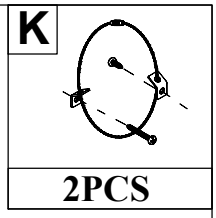

STEP: 16

Install the sink on the cabinet with glue.
Let stand for 24 hours

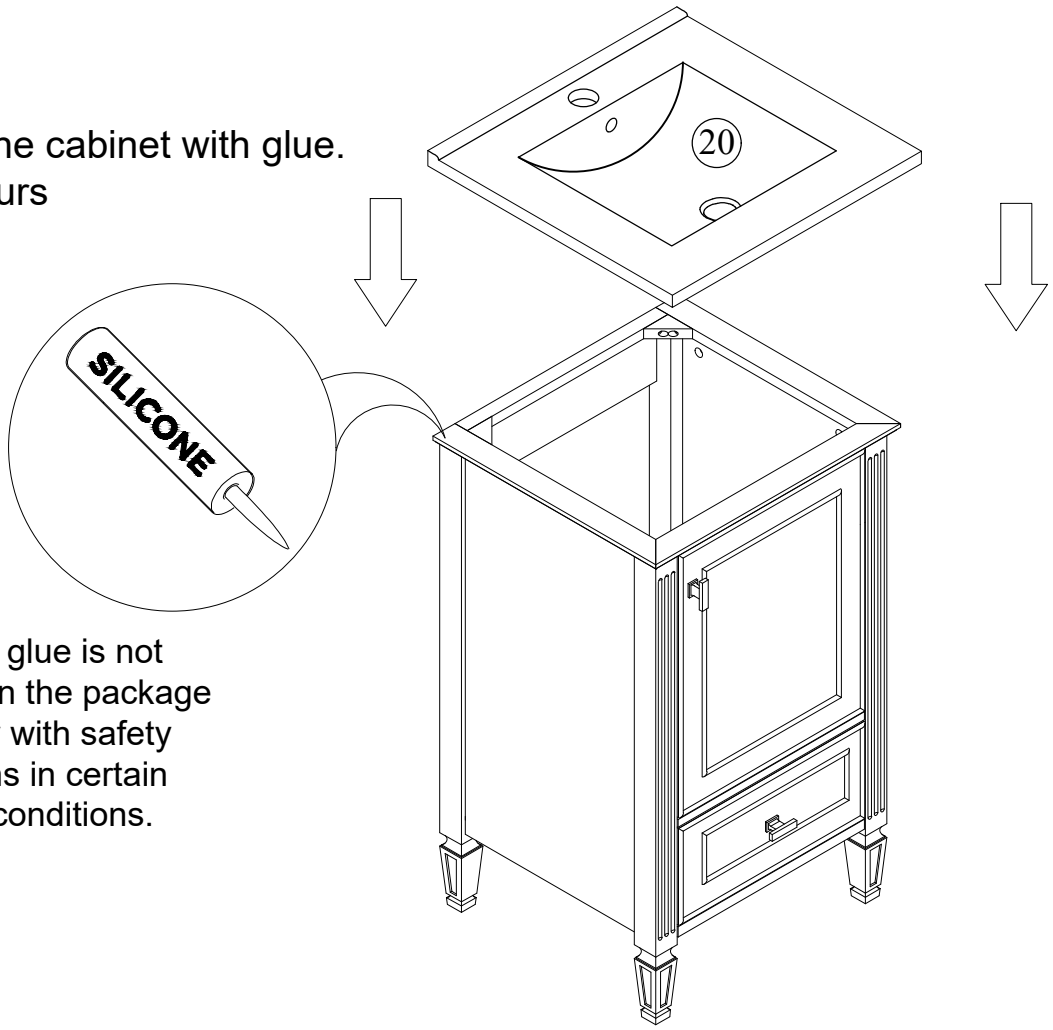

*Silicone glue is not included in the package to comply with safety regulations in certain shipping conditions.

STEP: 17

