N652P400774
N652P400775
N652P400776

ASSEMBLY INSTRUCTION

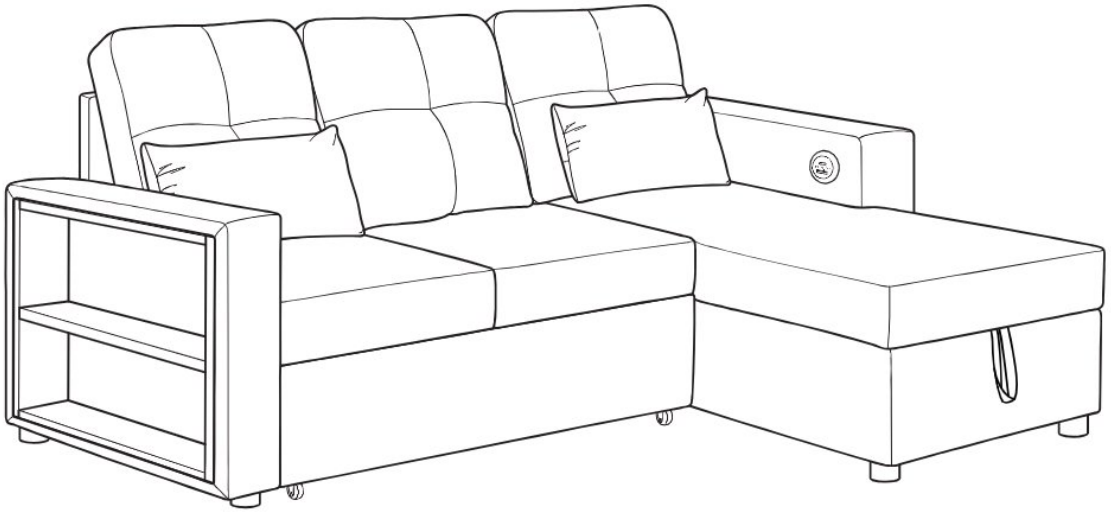

Friendly reminder:

1. This product is packed in 3 cardboard boxes. Please wait until all boxes arrive before opening the packaging.
2. Because all pillows are packaged in vacuum bags, some wrinkles can be produced. Please wait for 72 hours until your pillow reaches its original size. At . this time, the wrinkles on the bag should be gone.
3. When the sofa frame is assembled, the compressed package can be opened.



[DE]

Achtung: Lesen Sie die Anleitung vor dem Zusammenbau bitte vollständig durch. Überprüfen Sie, ob Sie alle auf den Seiten aufgeführten K omponenten und Werkzeuge haben.
Achtung: Überprüfen Sie regelmäßig alle Beschläge und Befestigungen, um sicherzustellen, dass sie sicher sind und um Unfälle zu vermeiden.**A chtung:** Stellen Sie Möbel nicht in die Nähe von Feuerquellen oder heißen Gegenständen, um Brandgefahr zu vermeiden.
Achtung: Erlauben Sie Kindern nicht, auf die Möbel zu klettern, da dies zum Umkippen und zu schweren Verletzungen führen kann. Bauen Sie d ie Möbel außerhalb der Reichweite von Kindern zusammen.

[EN]

Warning: Please read instructions fully before starting assembly.Check you have all the components and tools listed on pages.
Warning: Regularly check all fittings and fastenings to ensure they are secure and to prevent accidents
Warning: Do not place furniture close to fire sources or high-temperature objects to avoid the risk of fire.
Warning: Do not allow children to climb on the furniture as this may result in tipping and serious personal injury.Assemble the furniture away fr om the reach of children.

[FR]

Avertissement: Veuillez lire entièrement les instructions avant de commencer l'assemblage. Vérifiez que vous disposez de tous les composants et outils répertoriés sur les pages.
Avertissement: Vérifiez régulièrement tous les accessoires et fixations pour vous assurer qu'ils sont bien fixés et pour éviter les accidents
Avertissement: Ne placez pas les meubles à proximité de sources de feu ou d'objets à haute température pour éviter tout risque d'incendie.
Avertissement: Ne laissez pas les enfants grimper sur les meubles car cela pourrait entraîner un basculement et des blessures graves. Assem-bl ez les meubles hors de portée des enfants.

[IT]

Attenzione: leggere attentamente le istruzioni prima di iniziare il montaggio. Verificare di avere tutti i componenti e gli utensili elencati nelle p agine.
Attenzione: controllare regolarmente tutti i raccordi e gli elementi di fissaggio per assicurarsi che siano sicuri e prevenire incidenti
Attenzione: non posizionare i mobili vicino a fonti di fuoco o oggetti ad alta temperatura per evitare il rischio di incendio.
Attenzione: non consentire ai bambini di arrampicarsi sui mobili poiché ciò potrebbe causare ribaltamenti e gravi lesioni personali. Montare i mobili lontano dalla portata dei bambini.

[ES]

Advertencia: Lea las instrucciones completamente antes de comenzar el montaje. Compruebe que tiene todos los componentes y herramien-ta s que se enumeran en las páginas.
Advertencia: Compruebe periódicamente todos los accesorios y sujeciones para asegurarse de que estén seguros y evitar accidentes.
Advertencia: No coloque los muebles cerca de fuentes de fuego u objetos a alta temperatura para evitar el riesgo de incendio.
Advertencia: No permita que los niños se suban a los muebles, ya que esto puede provocar que vuelquen y lesiones personales graves. Monte l os muebles fuera del alcance de los niños.



[DE]
Warnung: Die maximale Belastbarkeit dieses Möbels beträgt: 150 kg, bitte nicht überlasten!

[EN]
Warning: The maximum load-bearing capacity of this furniture is: 150 kg, please do not overload!

[FR]
Avertissement: La capacité de charge maximale de ce meuble est de : 150kg, merci de ne pas surcharger !

[IT]
Attenzione: La capacità di carico massima di questo mobile è: 150kg, non sovraccaricare!

[ES]
Advertencia: La capacidad máxima de carga de este mueble es: 150kg, ¡no lo sobrecargue!

Importer	COMHARBOR LIMITED
Add	Unit C, Swift Point, Cosford Lane, Rugby, CV21 1PY, GB
Email	harborcomhar@gmail.com
Manufacturer	NINE U (HK) LIMITED
Add	FLAT 404, 4/FGOLDENGATECOMMBLDG136-138 AUSTINRD, TSTHONG KONG
Email/URL	489617350@qq.com
UK REP	COMHARBOR LIMITED Unit C, Swift Point, Cosford Lane, Rugby, CV21 1PY, GB harborcomhar@gmail.com
Product Identification	N652P400774 / N652P400775 / N652P400776
Made in	CHINA

Importeur	COMHARBOR LIMITED
Addresse	Unit C, Swift Point, Cosford Lane, Rugby, CV21 1PY, GB
Email/URL	harborcomhar@gmail.com
Hersteller	Huizhou Shengshi Chuangxing Technology Co.,Ltd
Adresse	3rd Floor, No.8-1Yuanhui Road,Chenjiang Street,Zhongkai High tech Zone,Huizhou City,Guangdong
Email/URL	inquiry@ptc-testing.com
Partienummer	N652P400774 / N652P400775 / N652P400776
Hergestellt in	CHINA
UK REP	COMHARBOR LIMITED Unit C, Swift Point, Cosford Lane, Rugby, CV21 1PY, GB harborcomhar@gmail.com

UK CA



Product Name: SOFA
Model:
Rated voltage: 5.0V
Rated frequency: 0.10-0.20A
Power: 12.0W

N652P400774

1 x 1 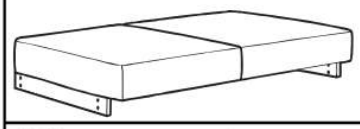	2 x 1 	3 x 2 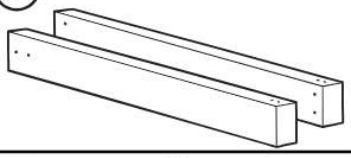	4 x 1 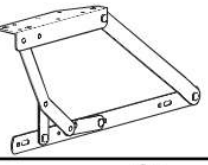
5 x 1 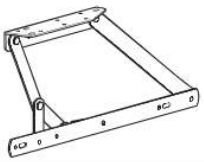	6 x 1 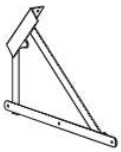	7 x 1 	8 x 2 
9 x 2 	10 x 1 	11 x 8 	

N652P400775

12 x 1 	13 x 1 	14 x 2 	15 x 2 	16 x 1 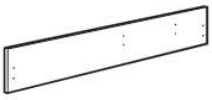	17 x 1 
18 x 1 	19 x 1 	20 x 1 	21 x 1 	22 x 1 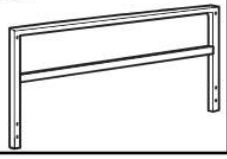	23 x 1 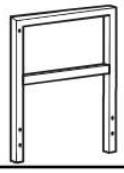

N652P400776

24 x 1 	25 x 1 	26 x 3 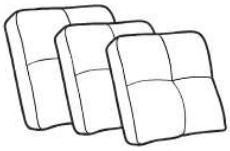	27 x 2 		
A x 1  M5	**B x 1**  M4	**C x 4** 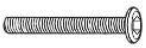 M8 x 50mm	**D x 8**  M8 x 40mm	**E x 2**  M8 x 20mm	**F x 44** spare 2pc  1/4" x 20mm
G x 4  M8	**H x 18** spare 2pc  M8 x 22mm	**I x 12** spare 2pc  M8 x 19mm	**J x 26** spare 2pc  M6 x 19mm	**K x 8**  M8 x 45mm	**L x 44** spare 2pc  #8 x 30mm
M x 30 spare 2pc  #8 x 15mm	**N x 16** spare 2pc #10 x 15mm	**O x 10** spare 2pc #5	**P x 1** M13	**AA x 4**	**BB x 4**
CC x 2	**DD x 1**	**EE x 1**	**FF x 1**	**GG x 4**	**HH x 2**

AlleTeile und Hardware

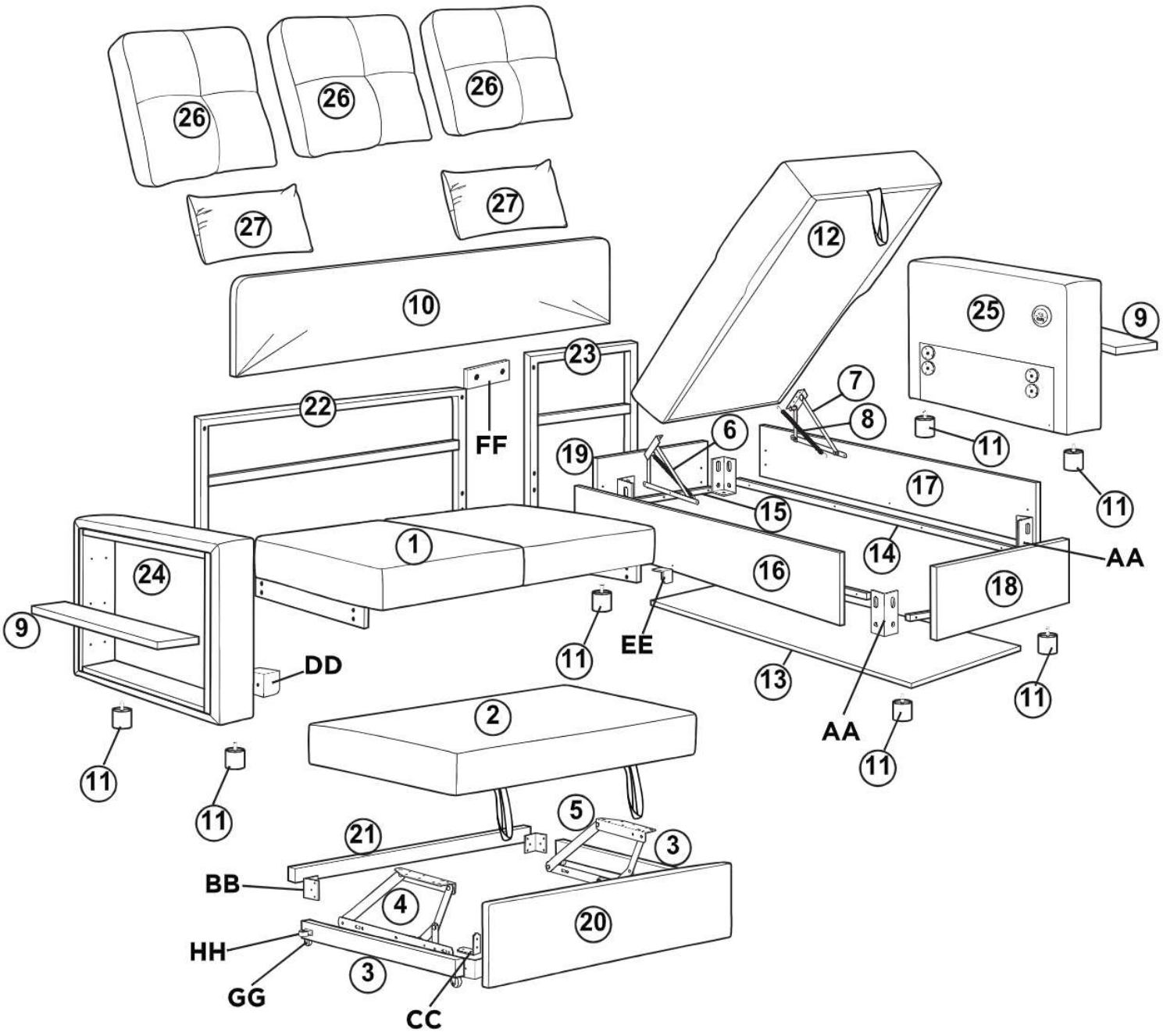

N652P400776

A x 1 M5	**B x 1** M4	**C x 4** M8 x 50mm	**D x 8** M8 x 40mm	**E x 2** M8 x 20mm	**F x 44** spare 2pc 1/4″ x 20mm
G x 4 M8	**H x 18** spare 2pc M8 x 22mm	**I x 12** spare 2pc M8 x 19mm	**J x 26** spare 2pc M6 x 19mm	**K x 8** M8 x 45mm	**L x 44** spare 2pc #8 x 30mm
M x 30 spare 2pc #8 x 15mm	**N x 16** spare 2pc #10 x 15mm	**O x 10** spare 2pc #5	**P x 1** M13	**AA x 4**	**BB x 4**
CC x 2	**DD x 1**	**EE x 1**	**FF x 1**	**GG x 4**	**HH x 2**

Package

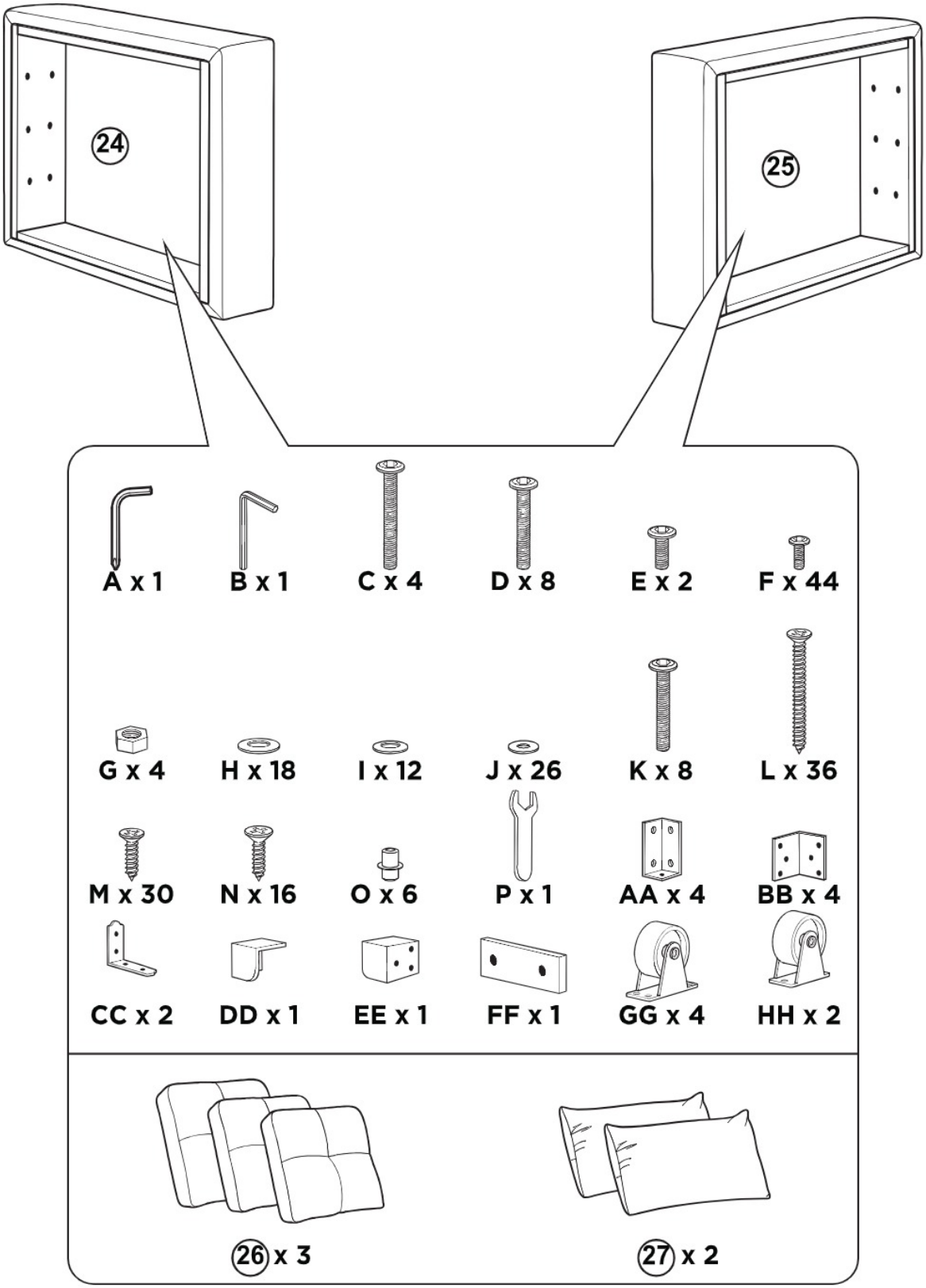
24
25
A x 1
B x 1
C x 4
D x 8
E x 2
F x 44
G x 4
H x 18
I x 12
J x 26
K x 8
L x 36
M x 30
N x 16
O x 6
P x 1
AA x 4
BB x 4
CC x 2
DD x 1
EE x 1
FF x 1
GG x 4
HH x 2
26 x 3
27 x 2

EN: if the customer needs (R) right lounger, please assemble part 25; if the customer needs (L) left lounger, please assemble part 24.

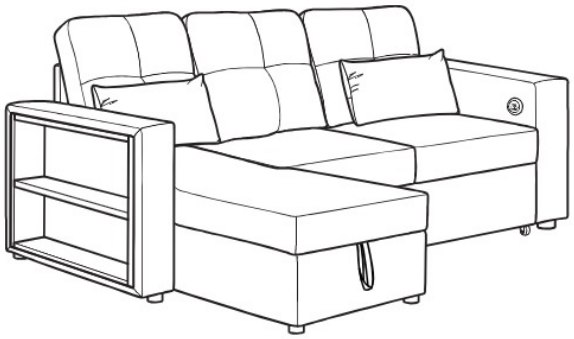

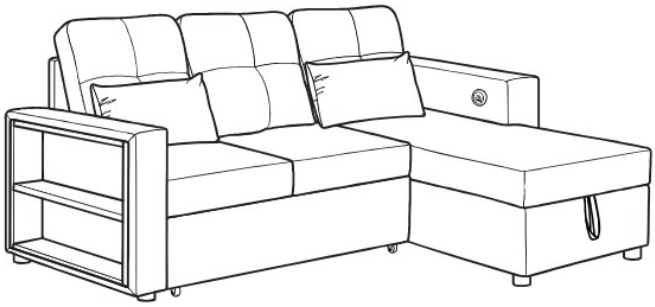

OR

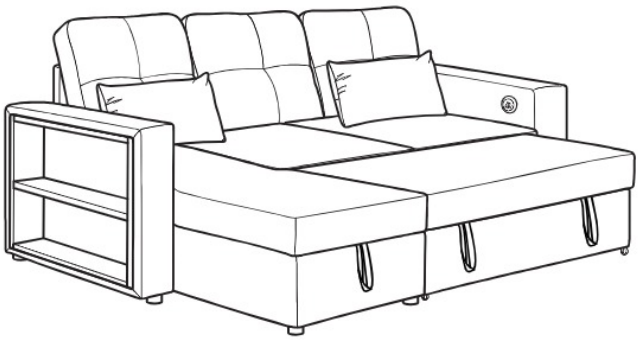

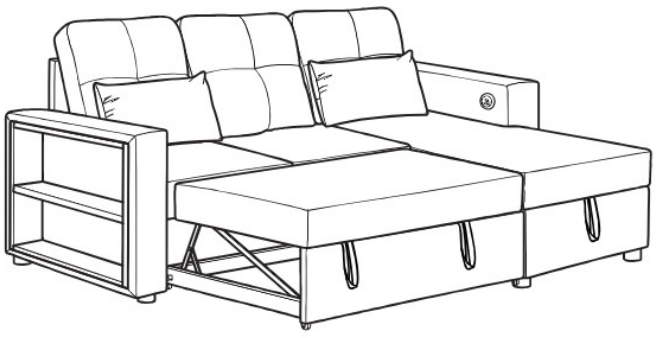

Step 1

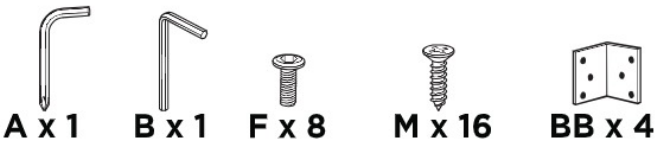
A x 1
B x 1
F x 8
M x 16
BB x 4

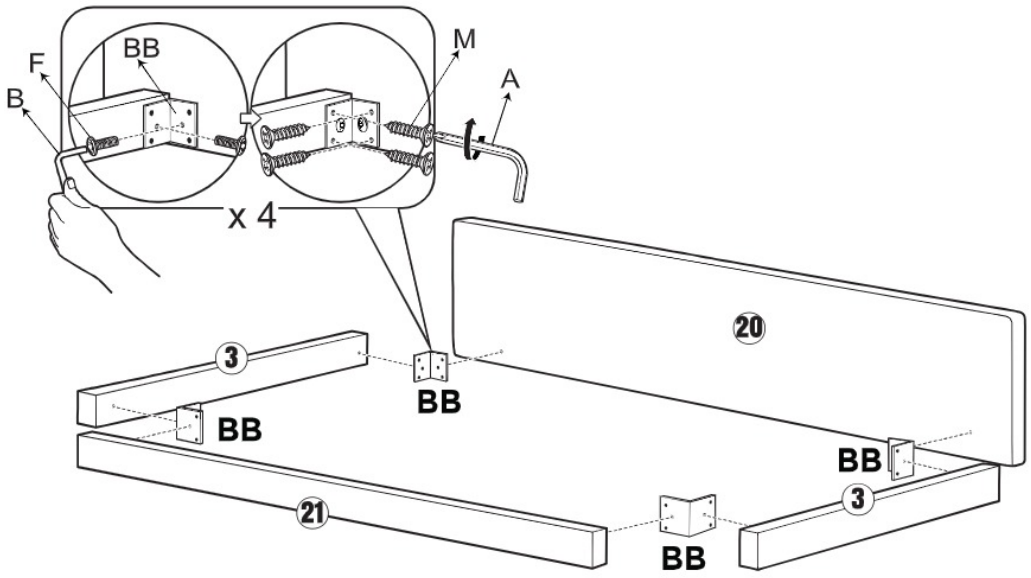
F
BB
M
A
B
x 4
20
3
BB
BB
BB
21
BB
3

Step 2


A x 1
M x 8
CC x 2

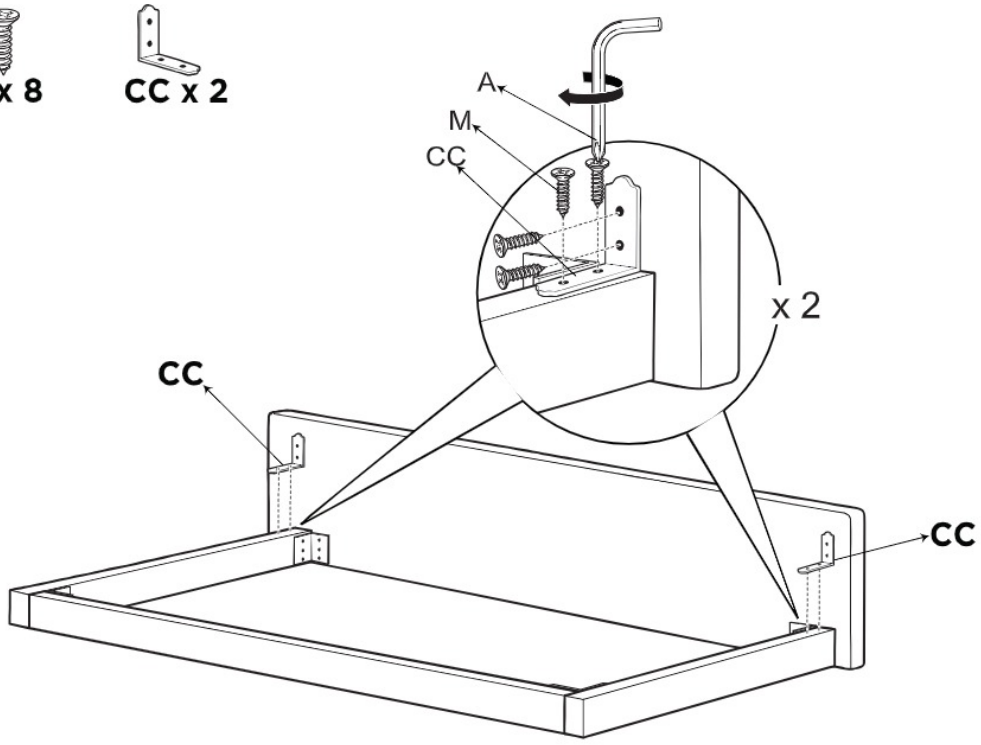
A
M
CC
x 2
CC
CC

Step 3

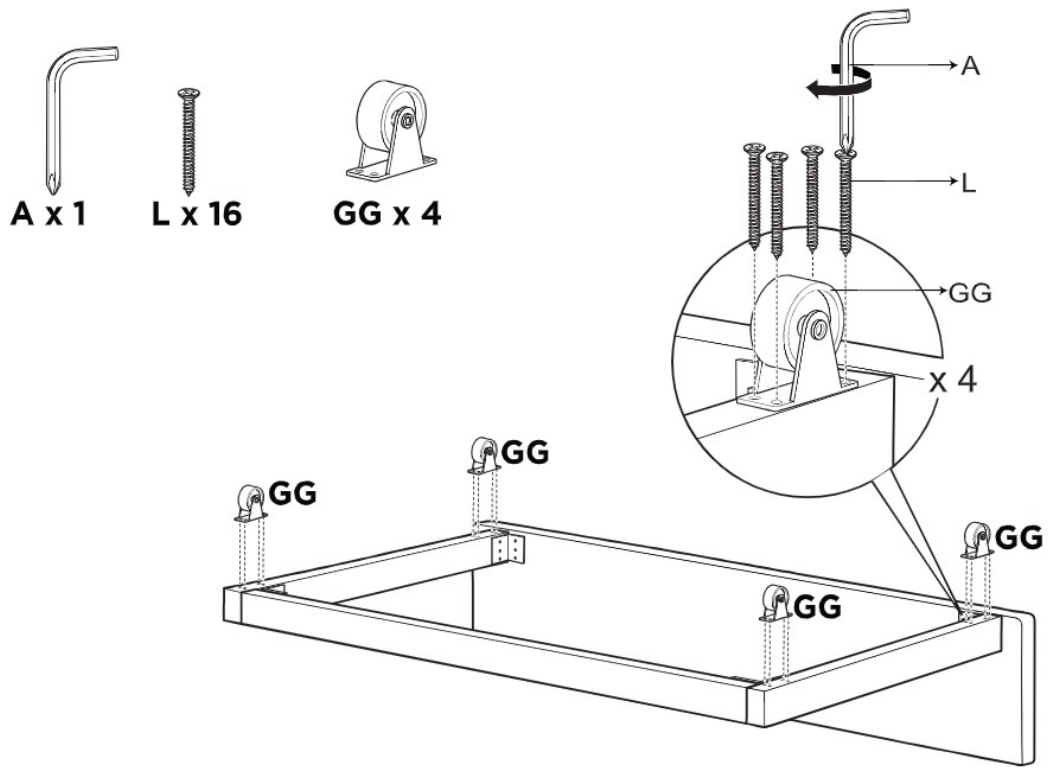

Step 4



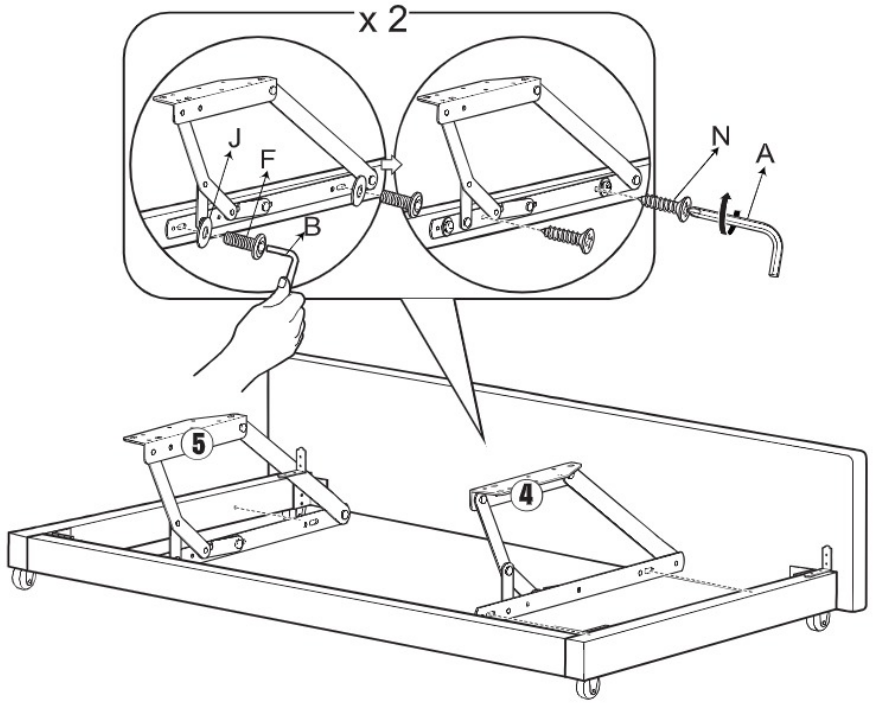

Step 5



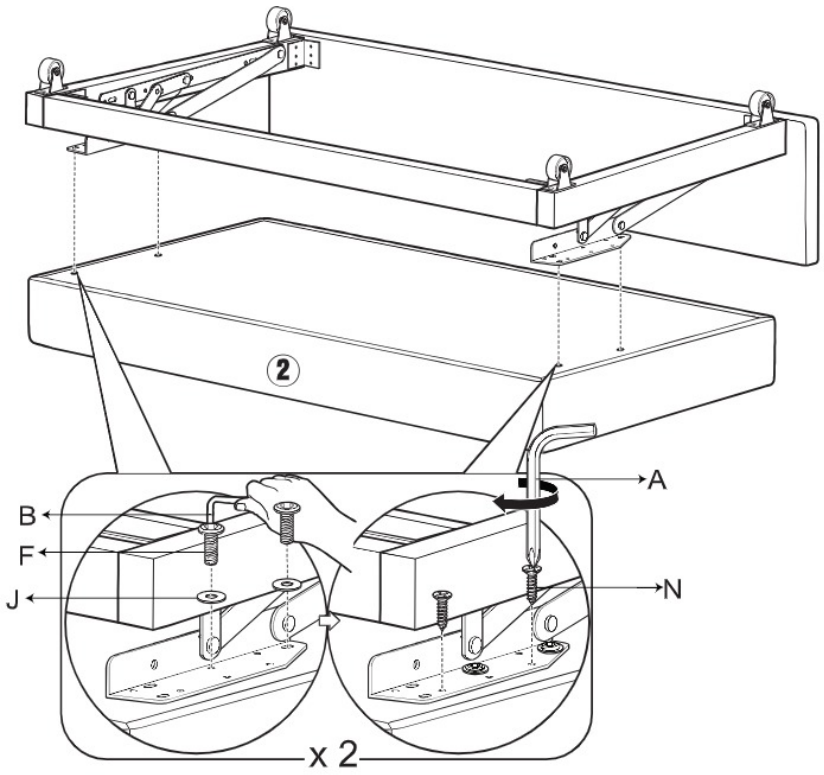

Step 6

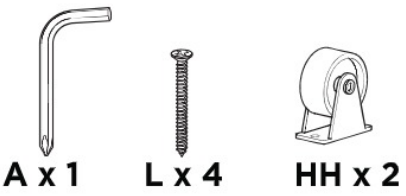

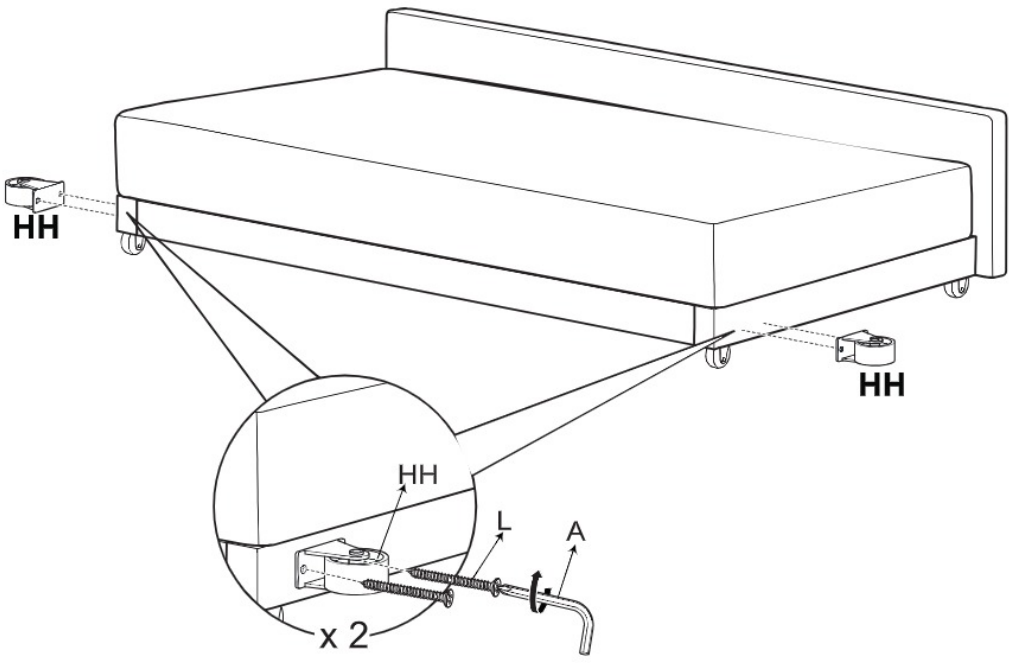

Step 7

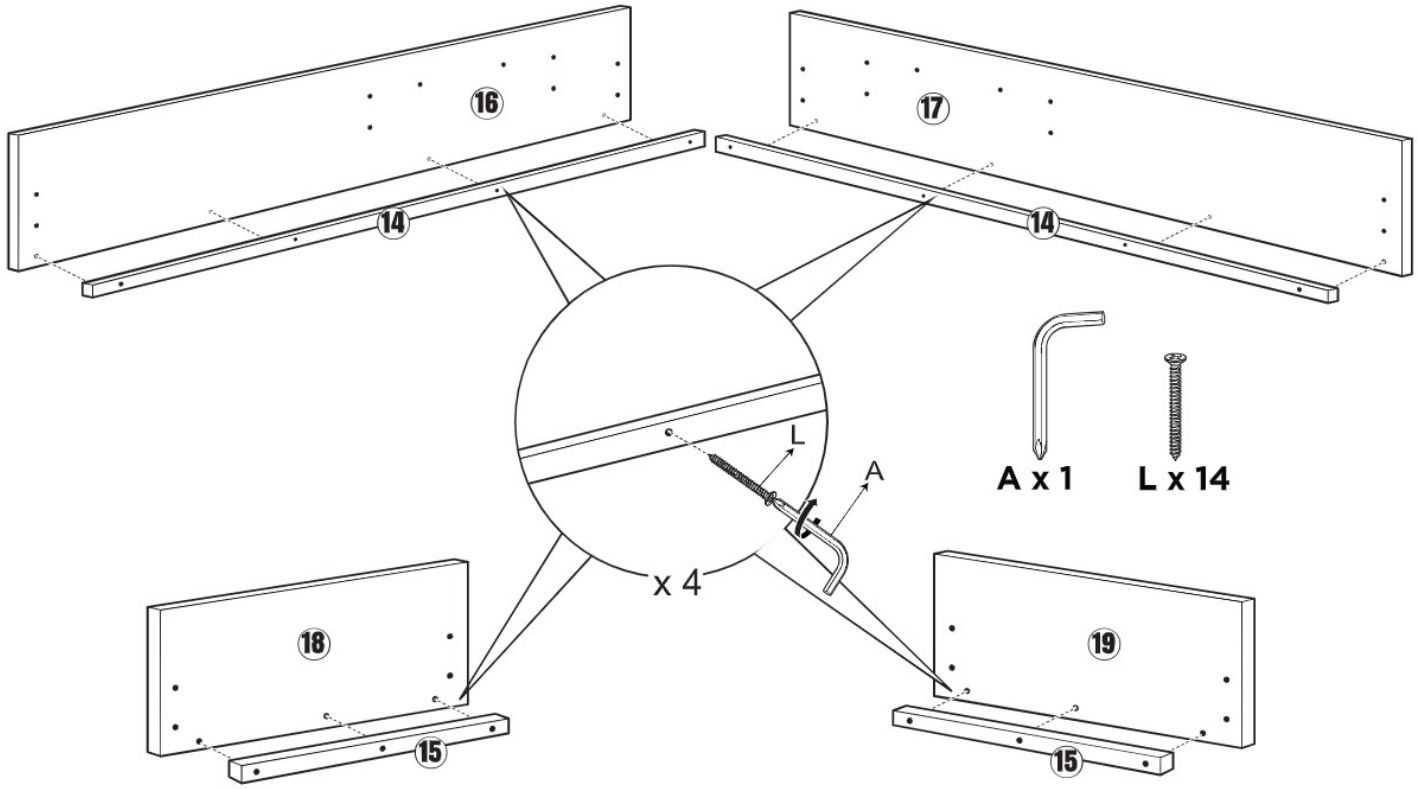
16
17
14
14
L
A
A x 1
L x 14
x 4
18
19
15
15

Step 8

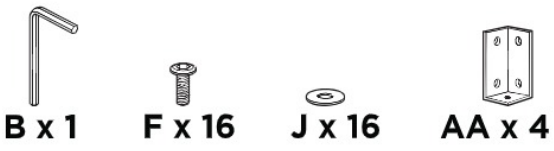
B x 1
F x 16
J x 16
AA x 4

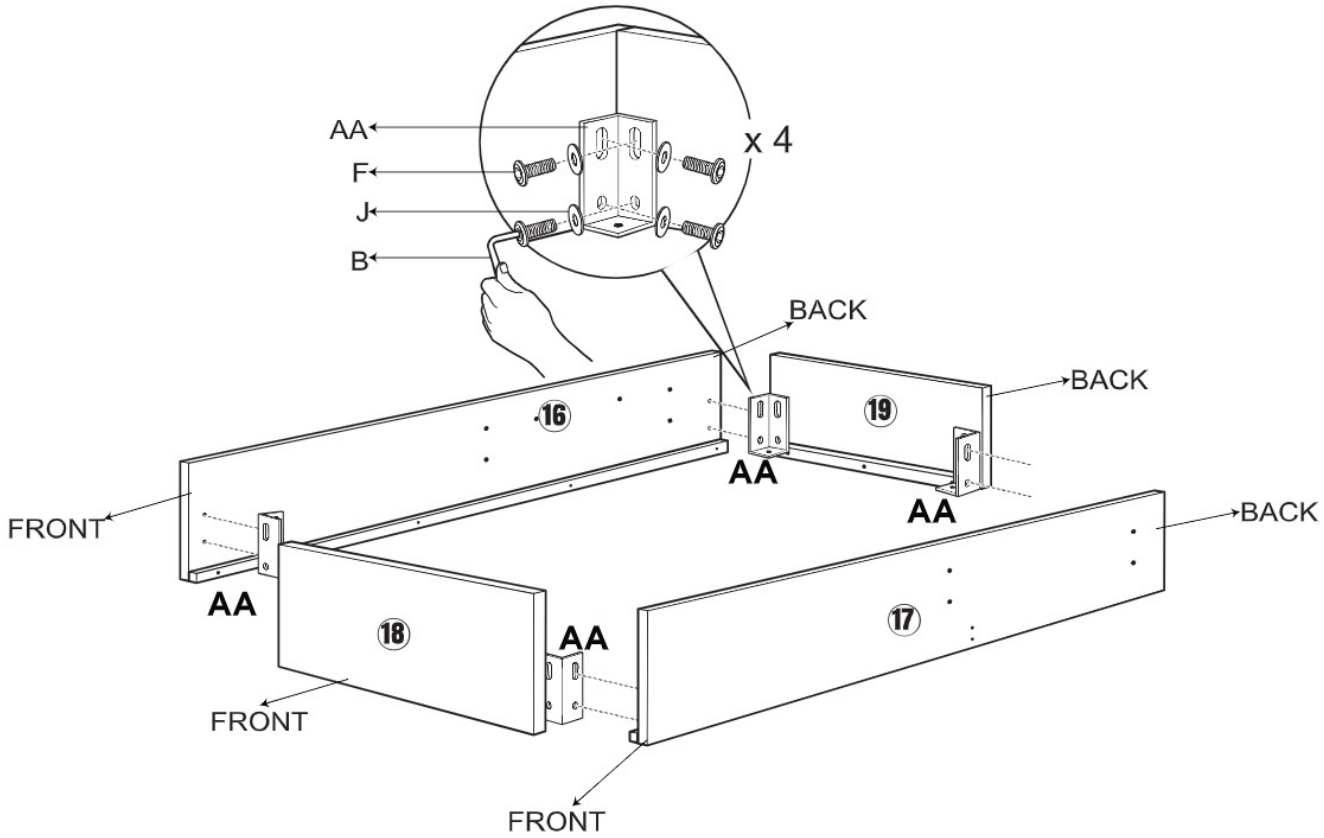
AA
F
J
B
x 4
BACK
BACK
16
19
AA
AA
FRONT
BACK
AA
18
AA
17
FRONT
FRONT

Step 9

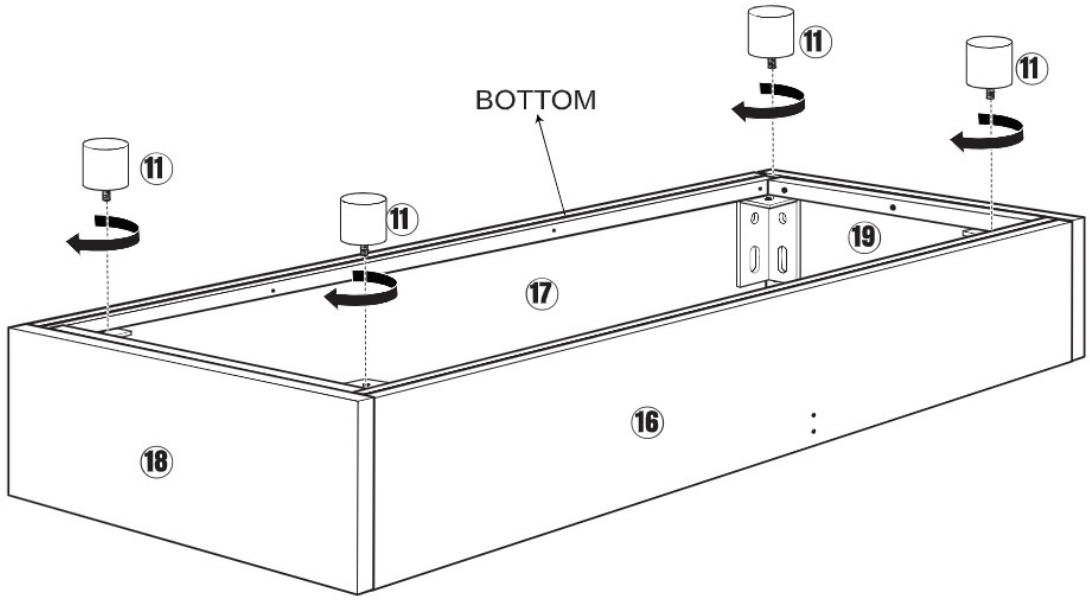

Step 10

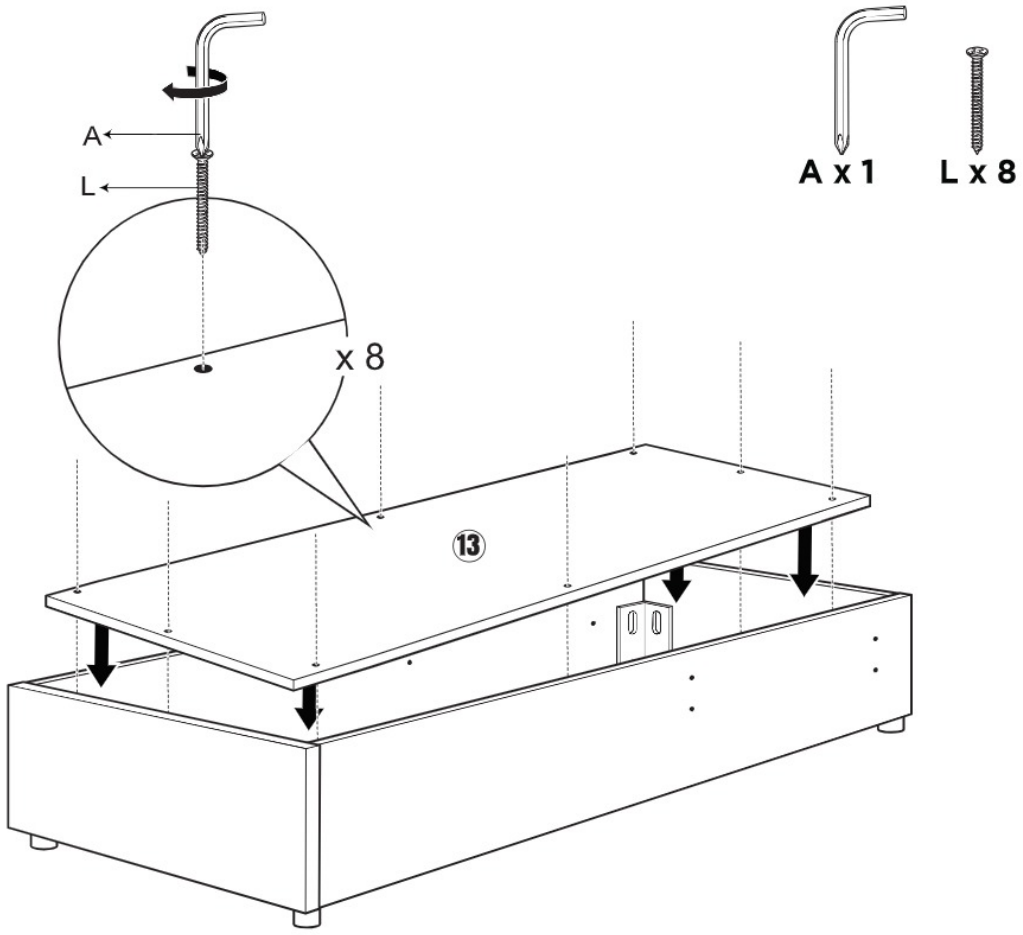

Step 11



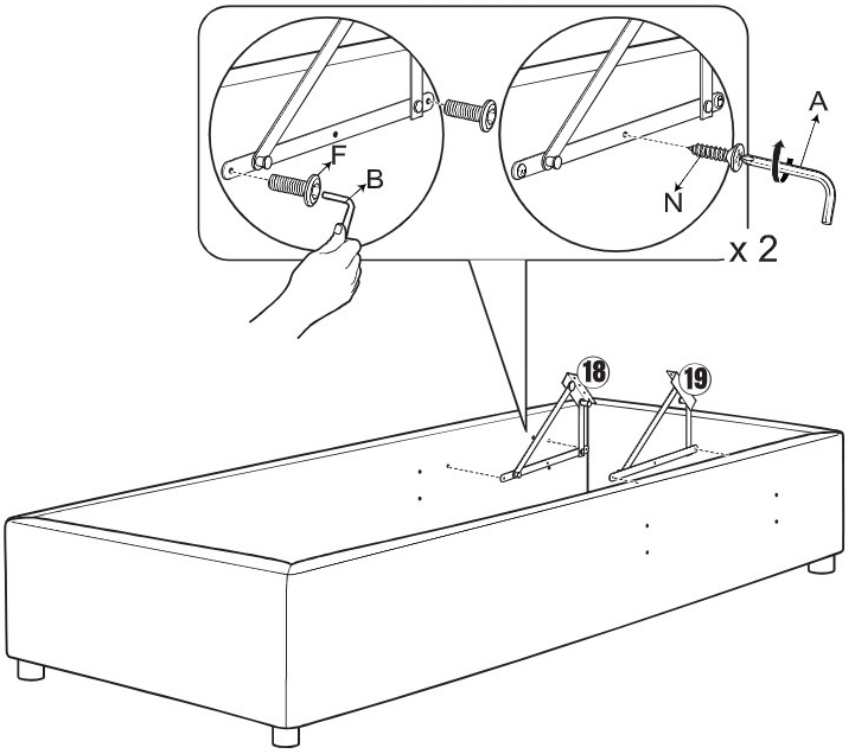

Step 12



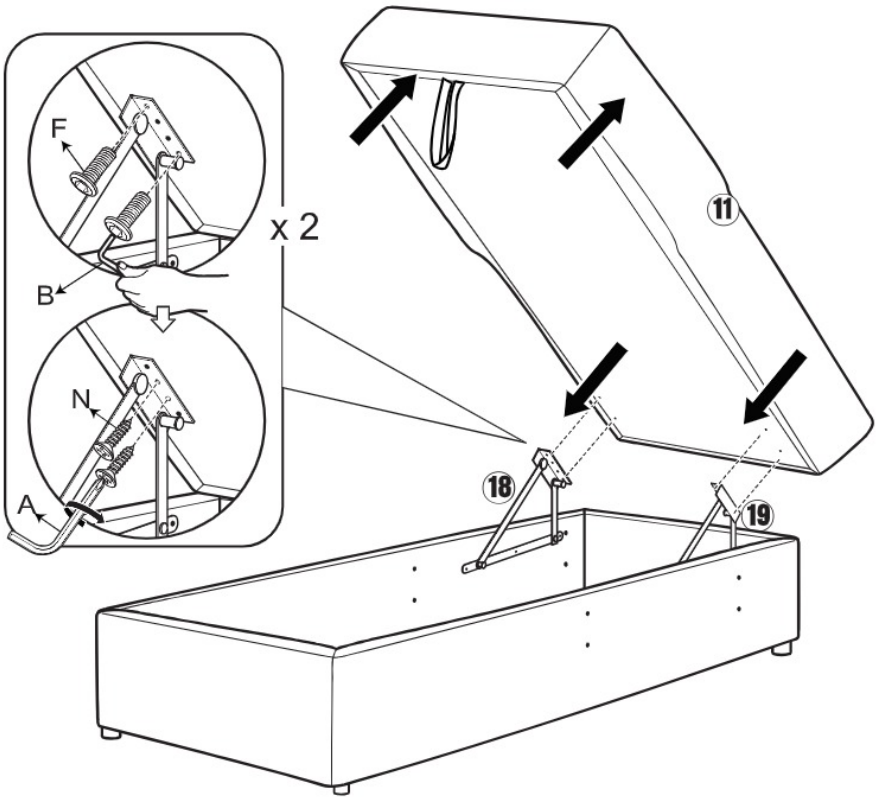

Step 13

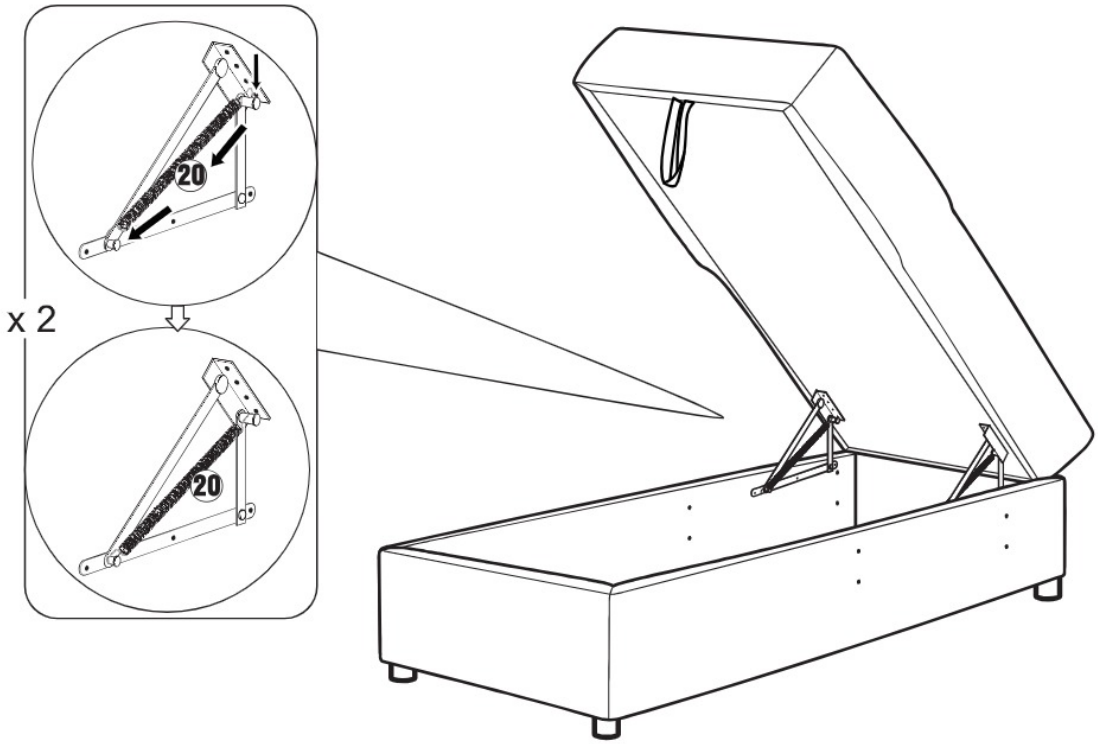

Step 14

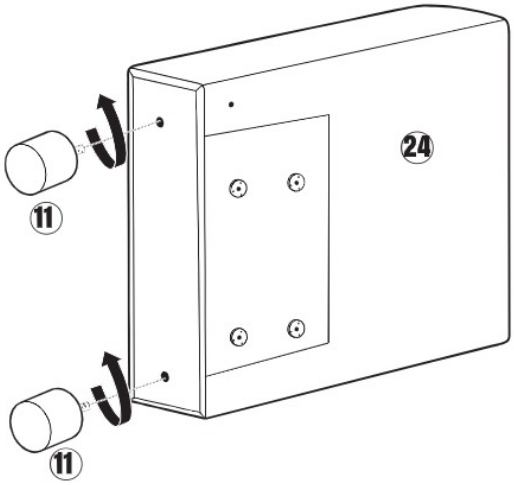

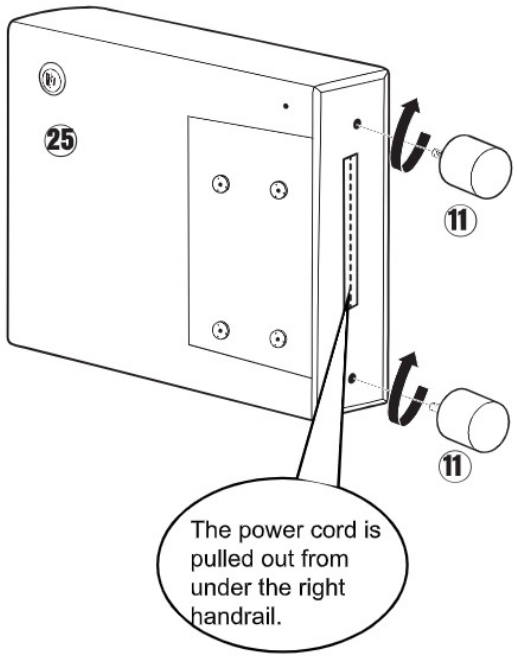

Step 15





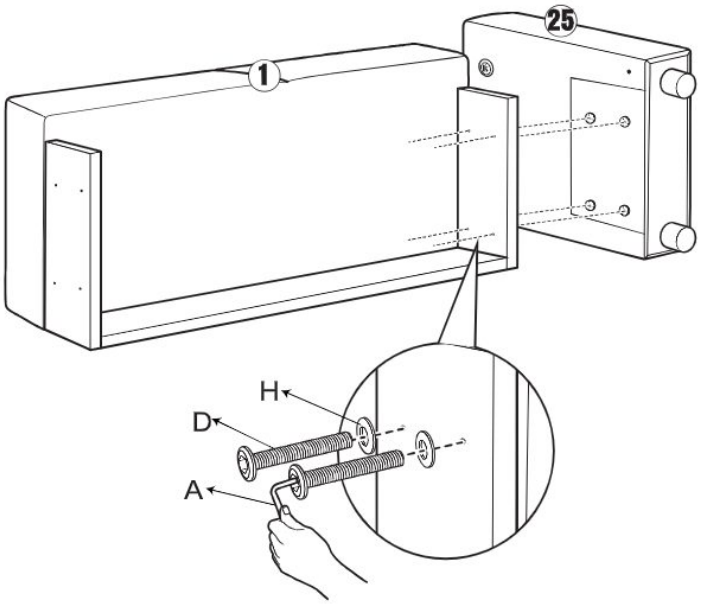





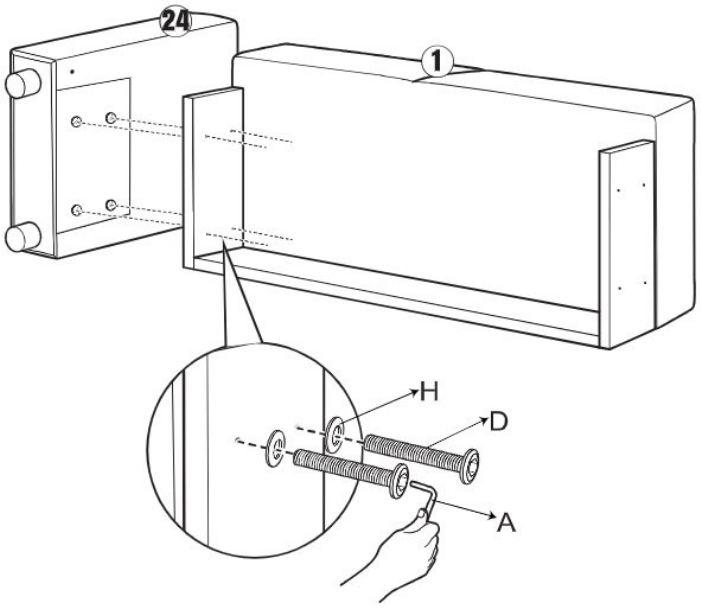

Step 16



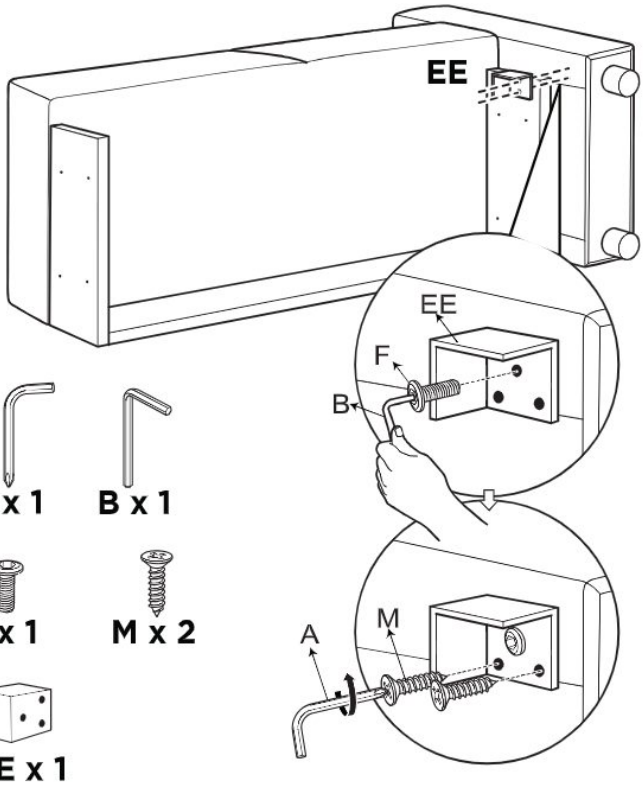



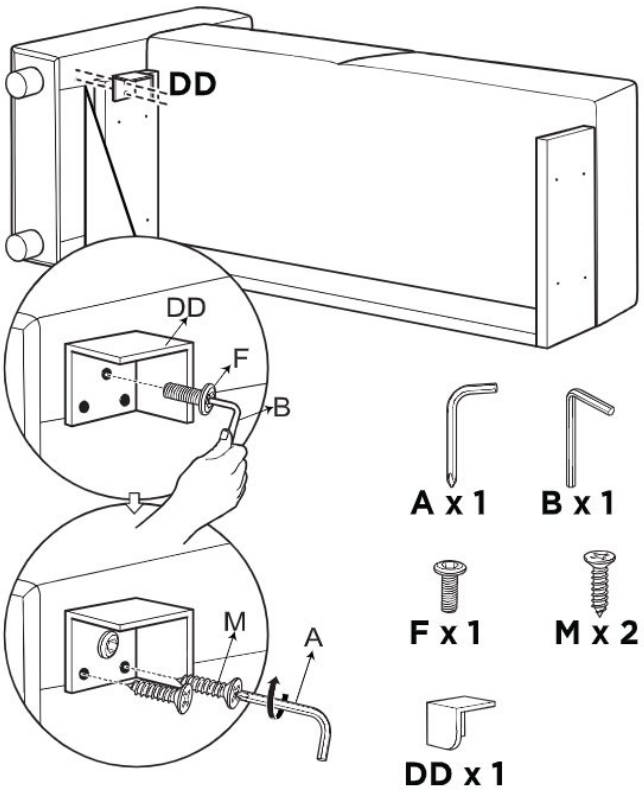

Step 17



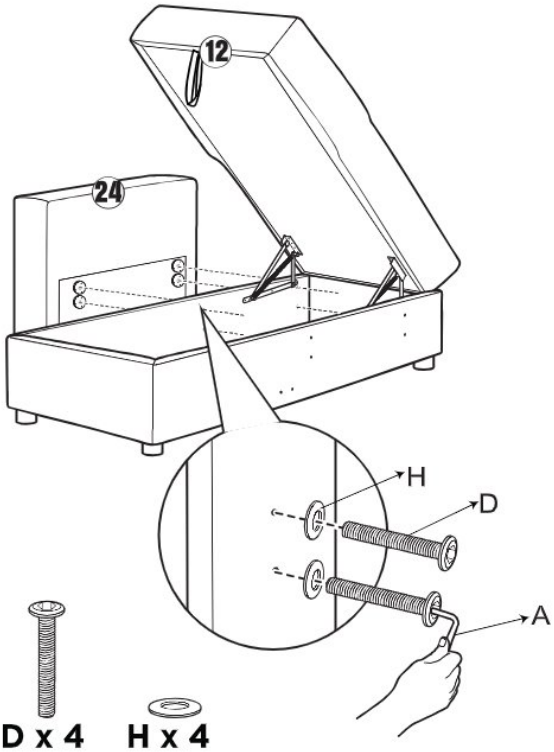

A x 1 D x 4 H x 4



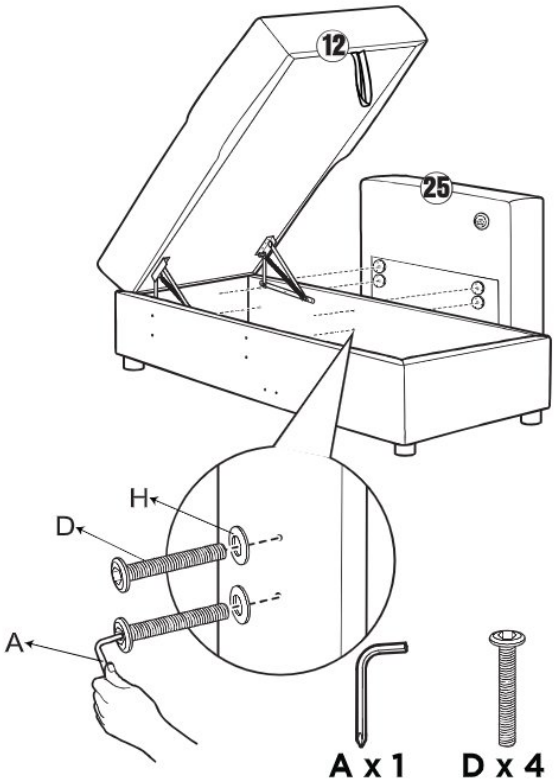

A x 1 D x 4 H x 4

Step 18



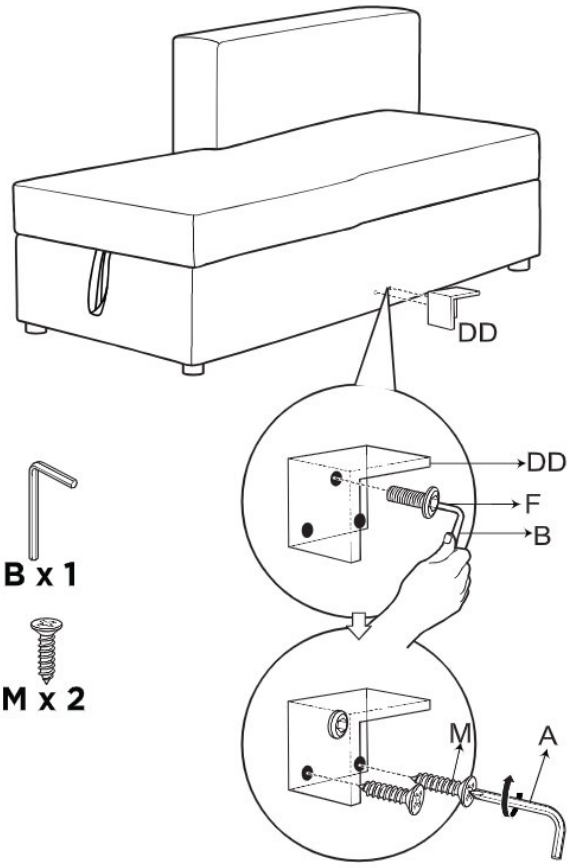

A x 1 B x 1 F x 1 M x 2 DD x 1



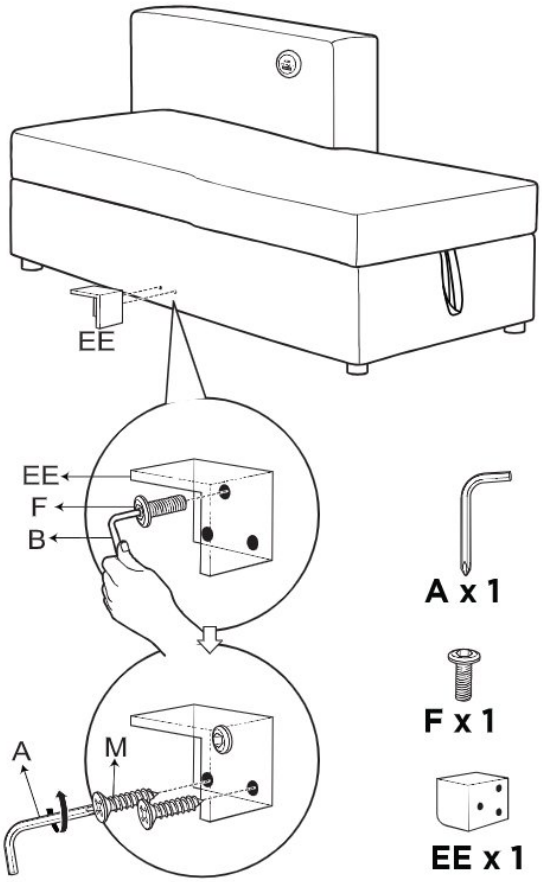

A x 1 B x 1 F x 1 M x 2 EE x 1

Step 19

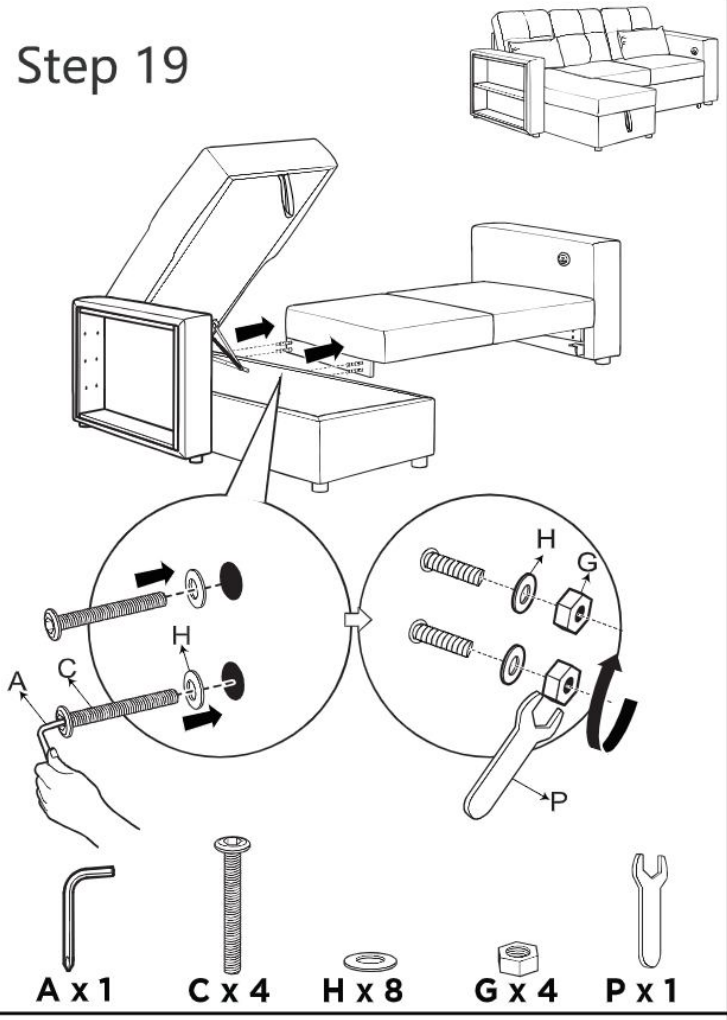

A x 1 C x 4 H x 8 G x 4 P x 1

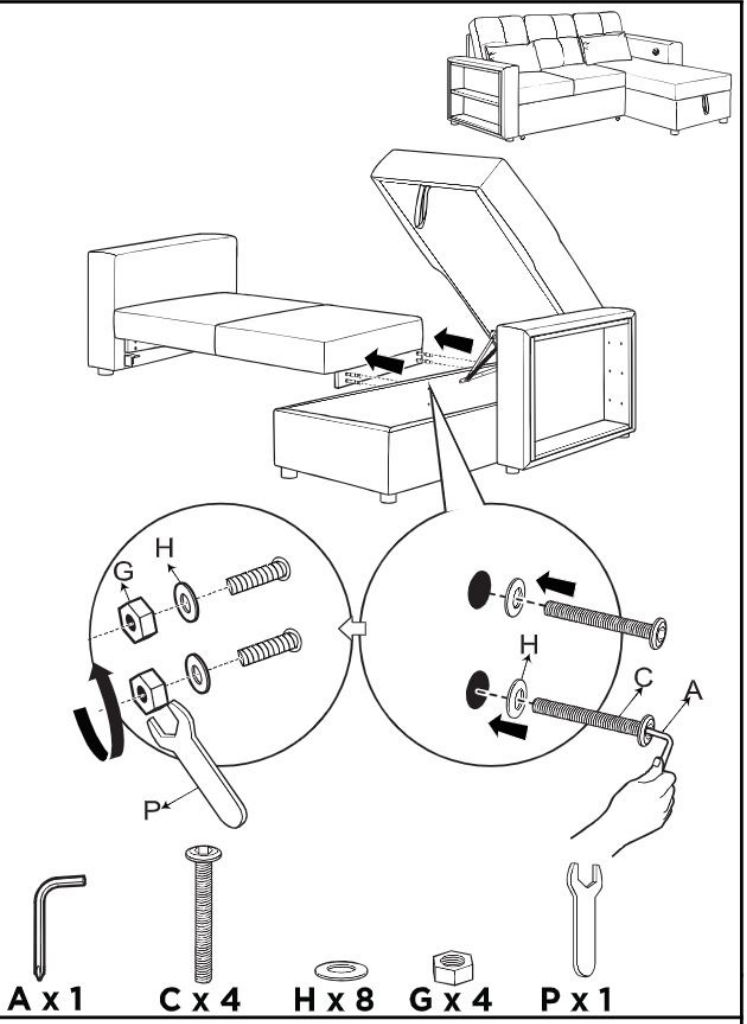

A x 1 C x 4 H x 8 G x 4 P x 1

Step 20

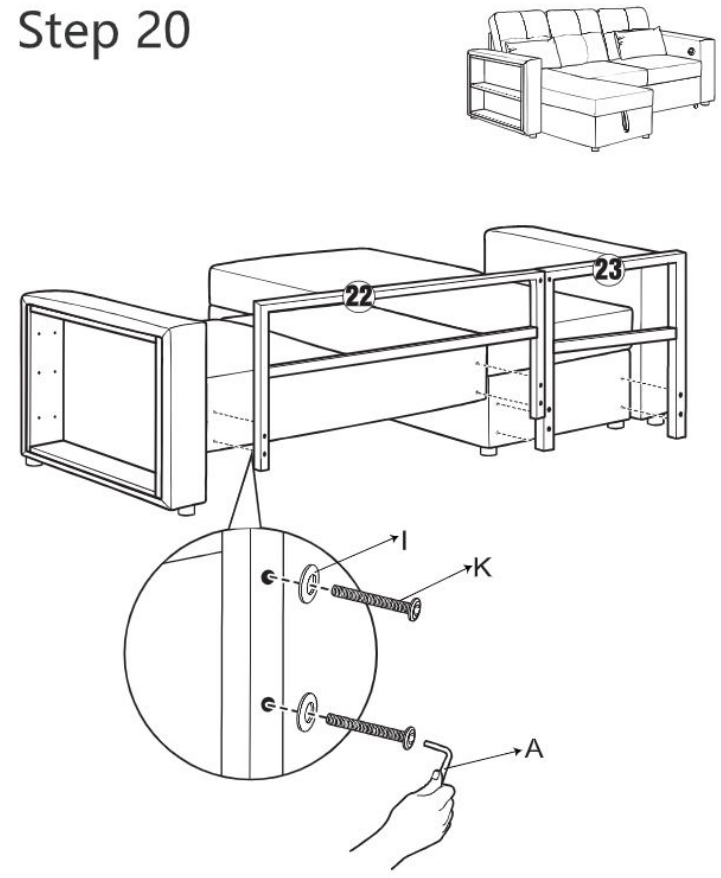

A x 1 K x 8 I x 8

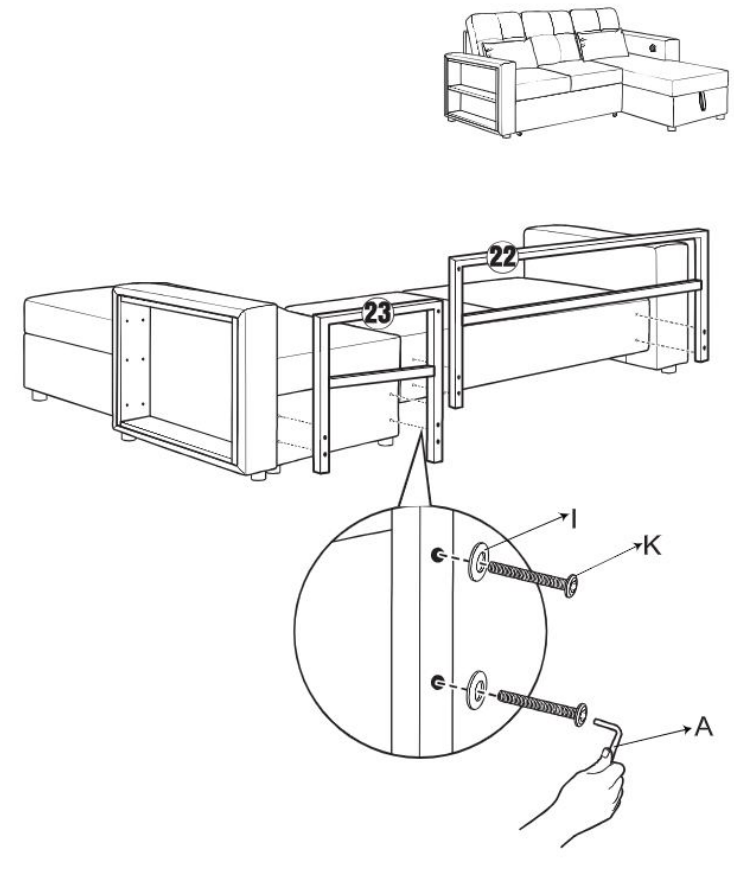

A x 1 K x 8 I x 8

Step 21



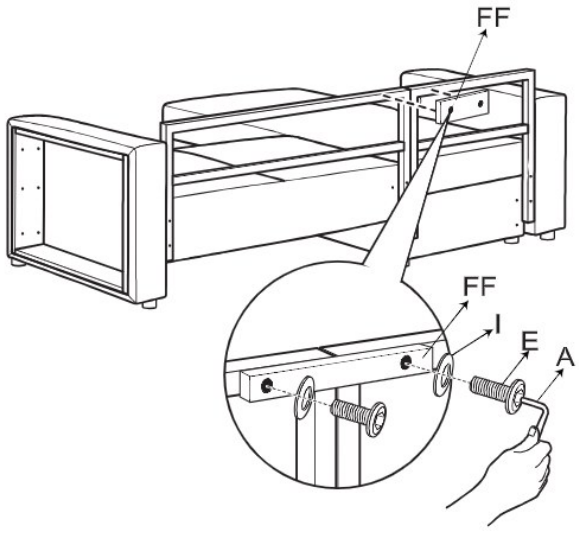





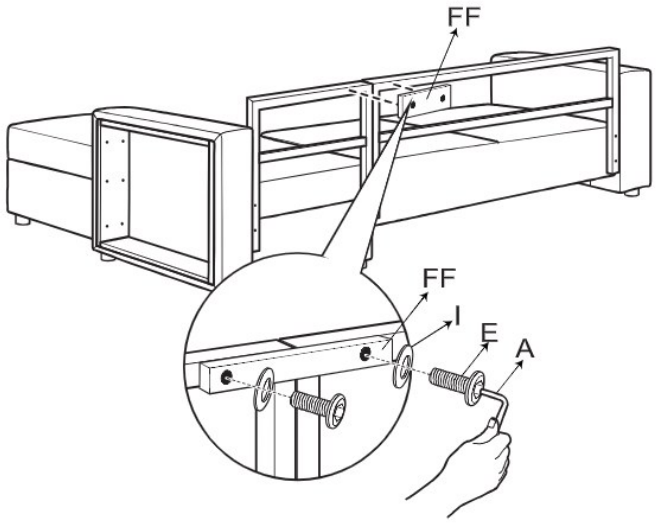



Step 22



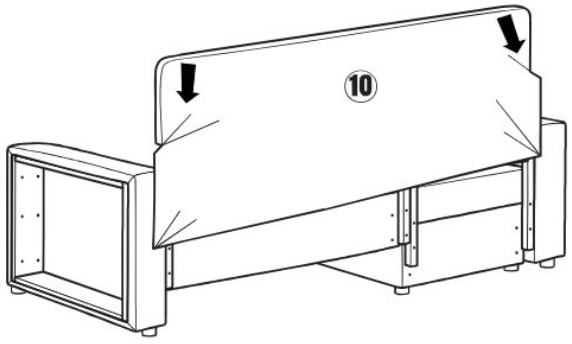

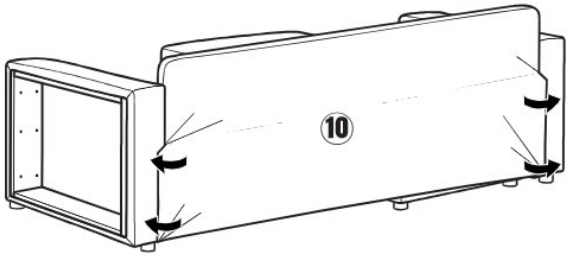



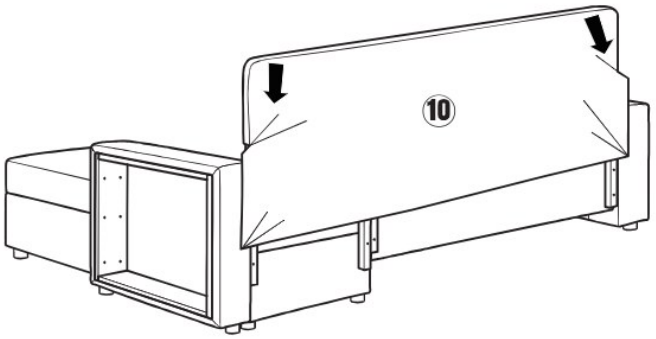

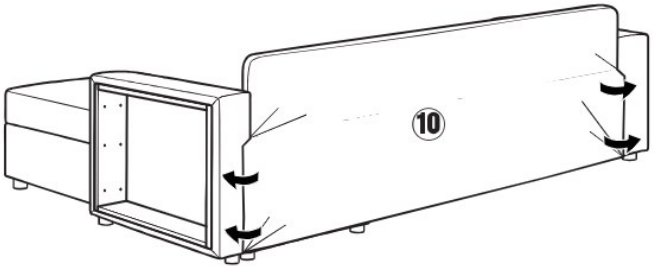

Step 23





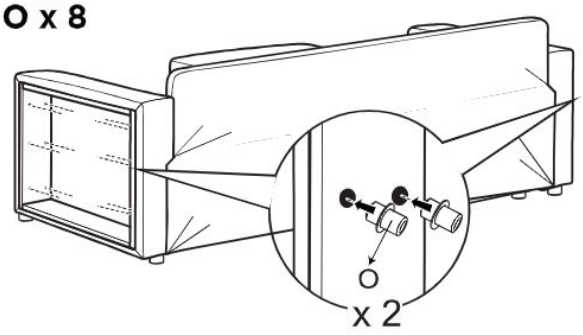



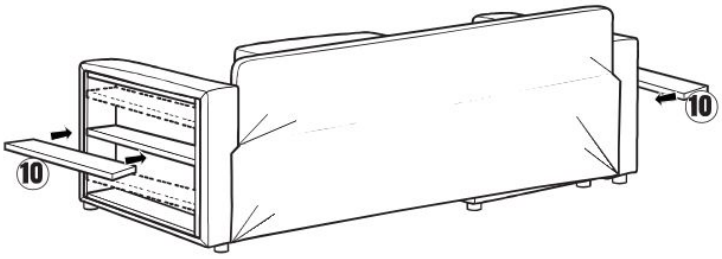





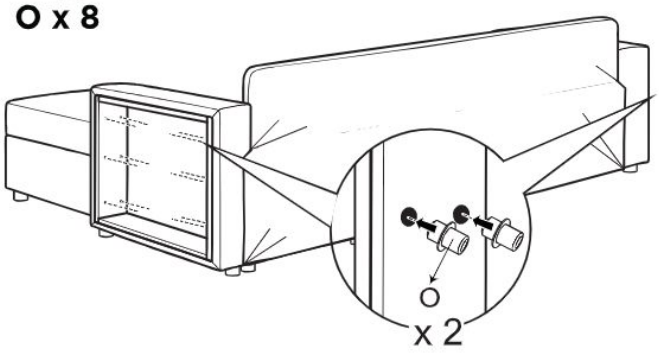



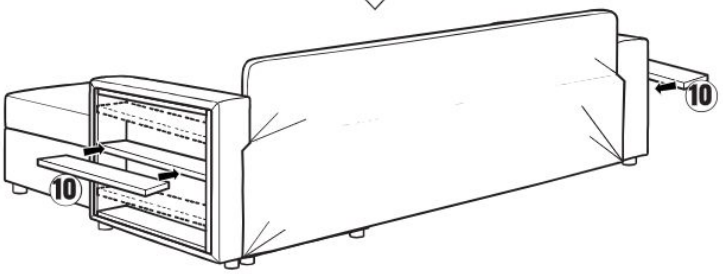

Step 24



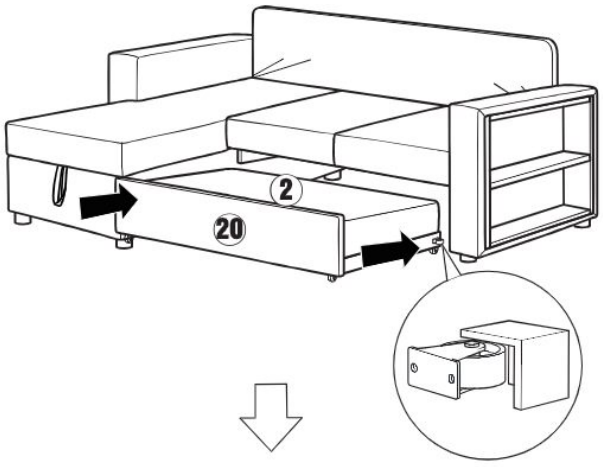

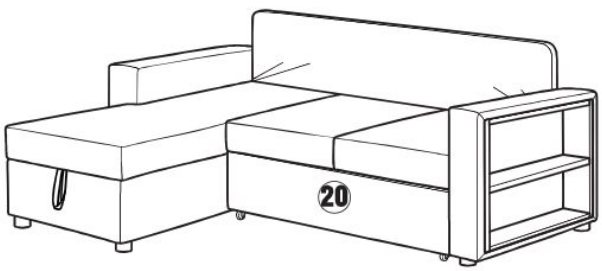



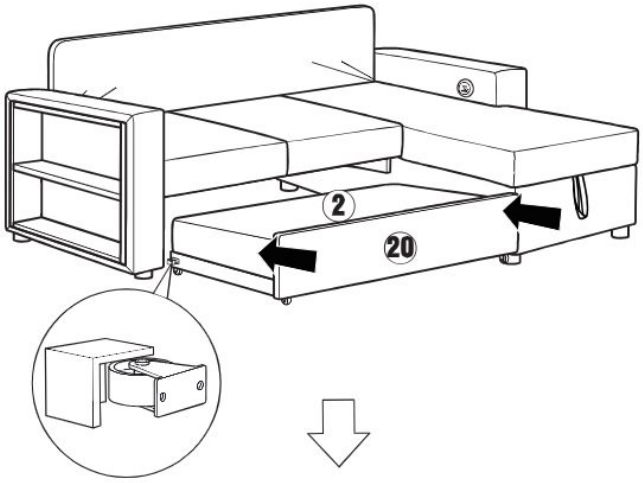

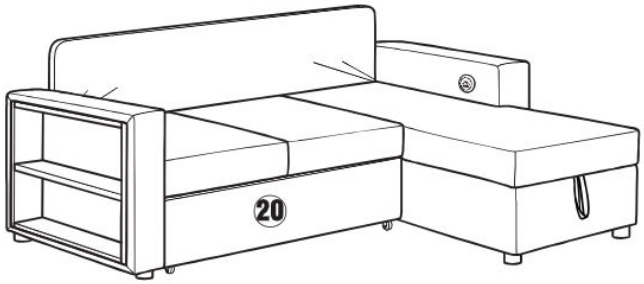

Step 25



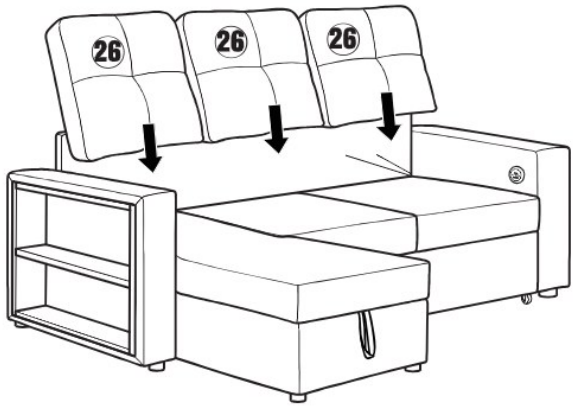
26
26
26

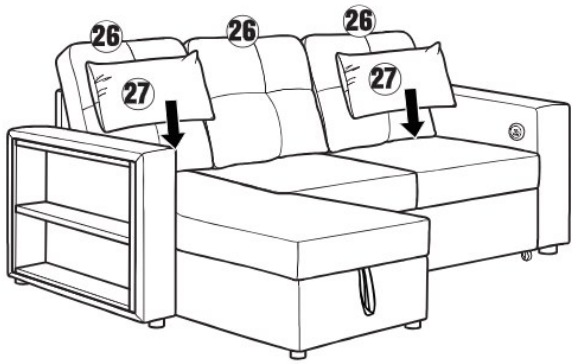
26
26
26
27
27

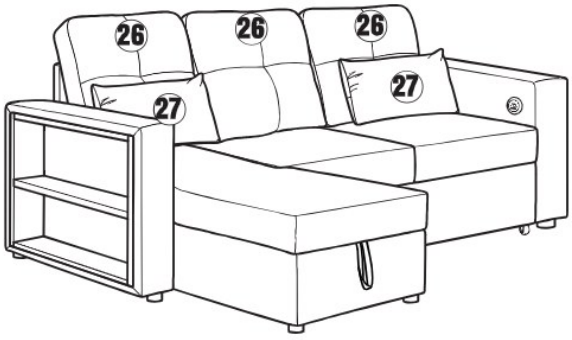
26
26
26
27
27



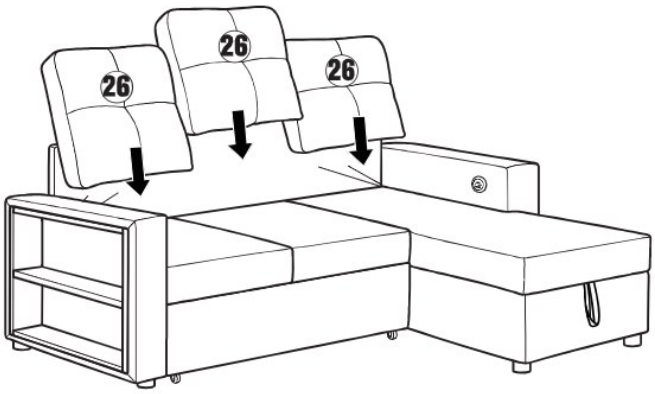
26
26
26

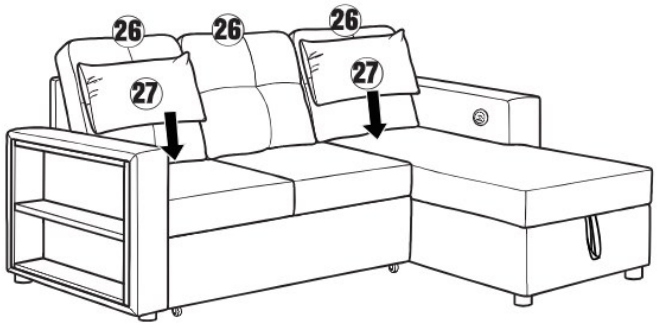
26
26
26
27
27

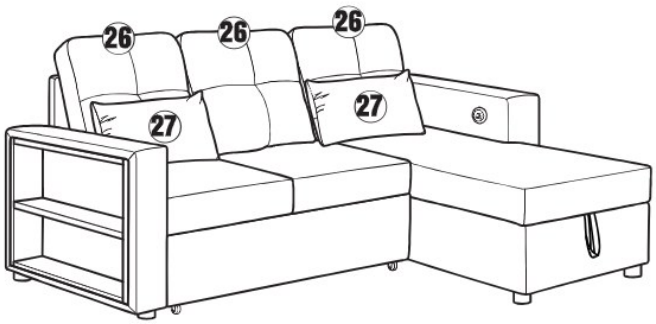
26
26
26
27
27

CERTIFICATE

Registration No.	Report No.
24EECS09002 C0567	24EECS09002 07721

DECLARATION OF CONFORMITY

This Verification of Compliance is hereby issued to the product designated below

Holder of Certificate :	Huizhou Shengshi Chuangxing Technology Co., Ltd 3rd Floor, No. 8-1 Yuanhui Road, Chenjiang Street, Zhongkai High tech Zone, Huizhou City, Guangdong Province (Factory Building 2)
Product : Model No:	POWER SUPPLY or Power adapter or AC/DC ADAPTER or Charger SS10A-050yyy-EUz, SS10A-050yyy-UKz, SS10B-050yyy-EUz, SS10B-050yyy-UKz, SS10C-050yyy-EUz, SS10C-050yyy-UKz, SS10D-xxxyyy-EUz, SS10D-xxxyyy-UKz ("xxx", "yyy" and "z" are variables, please refer to the test report for details)
Rated input :	100-240V~ 50/60Hz 0.35A Max
Rated output :	Please refer to the test report for details
Tested according to :	EN 55032:2015+A11:2020+A1:2020 EN 55035:2017+A11:2020 EN IEC 61000-3-2:2019+A1:2021 EN 61000-3-3:2013+A1:2019+A2:2021

This certificate of conformity is based on evaluation of a sample of the above mentioned product. Technical report and documentation are at the licence Holder's disposal. This is to certify that the tested sample is in conformity with all revision of Annex I of Council Directive 2014/30/EU, referred to as the EMC Directive. This certificate does not imply assessment of the series-production of the product. The holder of the certificate is authorized to use this certificate in Connection with the EC declaration of conformity according to Annex IV of the Directive.

DongGuan ShuoXin Electronic Technology Co., Ltd.
(CBTL Lab of UL International Demko)
Tel : 86-769-3902 6866 e-mail: service@attps.cn
Fax: 86-769-8509 8777 http://www.attps.cn

Date of issue: 12/12/2024 (mm/dd/yy)

Certification Body
Signature: Mr. Smile Wang
(Manager)

The CE Marking may be used if all relevant and effective EC Directives are complied with.

精准检测
PRECISE TESTING

VERIFICATION OF CONFORMITY

No.	:	PTC25052900702S-BS01
Applicant	:	Huizhou Shengshi Chuangxing Technology Co., Ltd
Address	:	3rd Floor, No. 8-1 Yuanhui Road, Chenjiang Street, Zhongkai High tech Zone, Huizhou City, Guangdong Province (Factory Building 2)
Manufacturer	:	Huizhou Shengshi Chuangxing Technology Co., Ltd
Address	:	3rd Floor, No. 8-1 Yuanhui Road, Chenjiang Street, Zhongkai High tech Zone, Huizhou City, Guangdong Province (Factory Building 2)
Factory	:	Huizhou Shengshi Chuangxing Technology Co., Ltd
Address	:	3rd Floor, No. 8-1 Yuanhui Road, Chenjiang Street, Zhongkai High tech Zone, Huizhou City, Guangdong Province (Factory Building 2)
Product	:	AC/DC ADAPTER
Trade Mark	:	/
Model	:	See ATTACHMENT Tabel for details.
Ratings	:	Input: 100-240V~50/60Hz 0.35A Output: See ATTACHMENT Tabel for details

The submitted sample of the above equipment has been tested and found to comply with the following UK legislation:

S.I. 2016 No. 1101 Electrical Equipment (Safety) Regulations 2016

The standard(s) used for showing compliance with the essential requirements:

Applicable Standard(s)	Test Report(s) Number
BS EN IEC 62368-1:2020+A11:2020	**PTC25052900702S-BS01**

This verification is part of the full test report(s) and should be read in conjunction with it. This verification is based on an evaluation of one sample of above mentioned product. It does not imply assessment of the production of the product.Without the written approval of Precise Testing & Certification (Guangdong) Co., Ltd., this verification is not permitted to be reproduced, except in full. It is not permitted to use the test lab's logo. The UKCA marking may only be used if all the relevant and effective UK legislation are applicable.

UKCA

PRECISE TESTING & CERTIFICATION (GUANGDONG) CO., LTD.

Jacky Ou
Manager
Date: 2025-07-08

Precise Testing & Certification (Guangdong) Co., Ltd.
Building 1, No.6, Tongxin Road, Dongcheng Street,
Dongguan, Guangdong, China
Tel: 86 769 38808222 Web:www.ptc-testing.com
Mail: inquiry@ptc-testing.com

VERIFICATION OF CONFORMITY

Attachment

No. : PTC25052900702S-BS01

Model : See the model list for details

Model list:

Model No.	Input Rating	Output Rating		
		Output Voltage (VDC)	Output Current (A)	Max. Output Power (W)
SS12z-050yyyB	100V-240V~, 50/60Hz, 0.35A max	5	0.01-2.4	12
SS12W-xxxyyyn		3-24	0.01-2.4	

Table B: Definition of variables

Variable	Range of variable:	Content:
z	A, C, D	"A" represents the prototype with a single USB output port. "C" represents the prototype of the type-C output port. "D" represents a prototype with dual USB output ports.
yyy	001-240	"yyy" are 3 digits number which represents the output current in A dividing by 100 and rising in step of 0.01A, for example, 001 represents the output current is 0.01A, 240 represents the output current is 2.4A.
xxx	030-240	"xxx" are 3 digits number which represents the output electric tension in V dividing by 10 and rising in step of 1V, for example, 030 represents the output electric tension is 3V, 240 represents the output electric tension is 24V.
n	B	"B" represents the British plug. When "n" is not written, it indicates that the AC pin can be replaced