Assembly Instructions

CORNER CHAIR

CAUTION: You must read this Assembly Instructions before you proceed.

Please look in Seat Panel for hardware packs

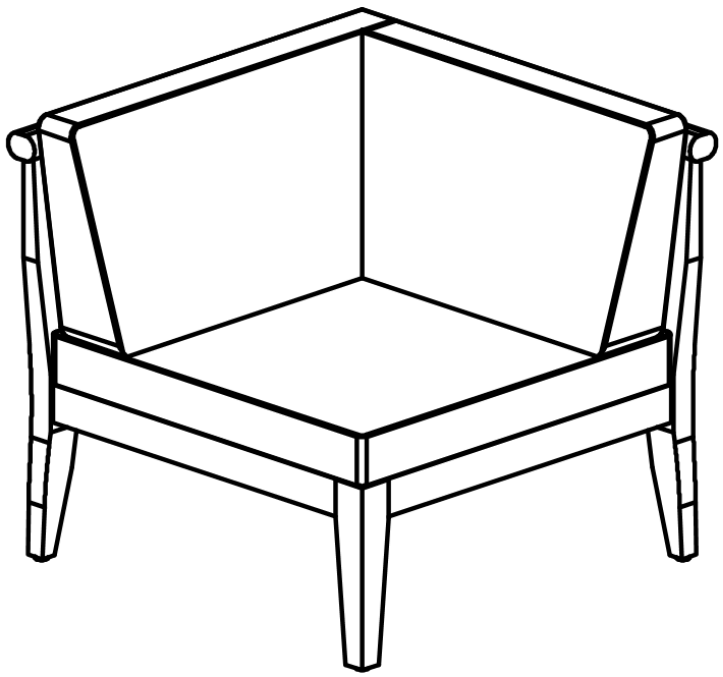

CAUTION: This Corner Chair is NOT a TOY.
Keep your child / children at bay in the process of assembly.
For turning the Corner Chair and to prevent any possible damage to the Corner Chair, 2 persons may be needed to execute this action.

Parts List

Label	Picture	Description	Qty
A		Left Leg Panel With Pre-installed Levellers	**1**
B		Right Leg Panel With Pre-installed Levellers	**1**
C		Seat Panel	**1**
D		Leg	**1**
E	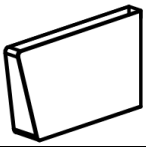	Large Back Cushion	**1**
F	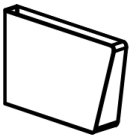	Small Back Cushion	**1**
G	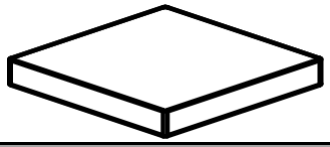	Seat Cushion	**1**

Hardware

Label	Picture	Description	Qty
①		Screw (M7*90mm)	2
②		Bolt (M6*50mm)	7
③	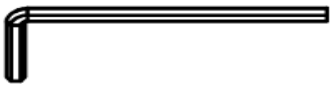	Allen Wrench	1

Assembly Preparation

Before Beginning Assembly:

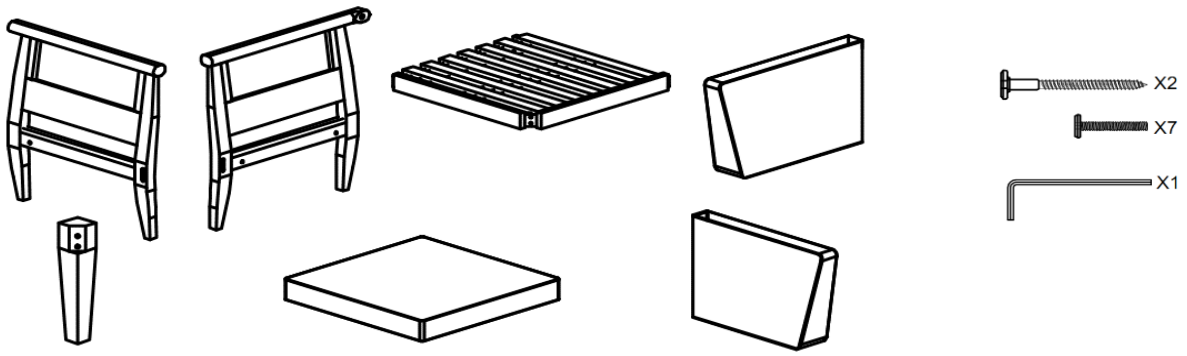

- **Read instruction, cover to cover-**
- **Have 2 adults on hand for assembly-**
- **Do not assembly on flooring or carpet-**
- **Assemble on a clena non- marring surface (packing foam)-**
- **Save all packaging until finished-**

Assembly Steps

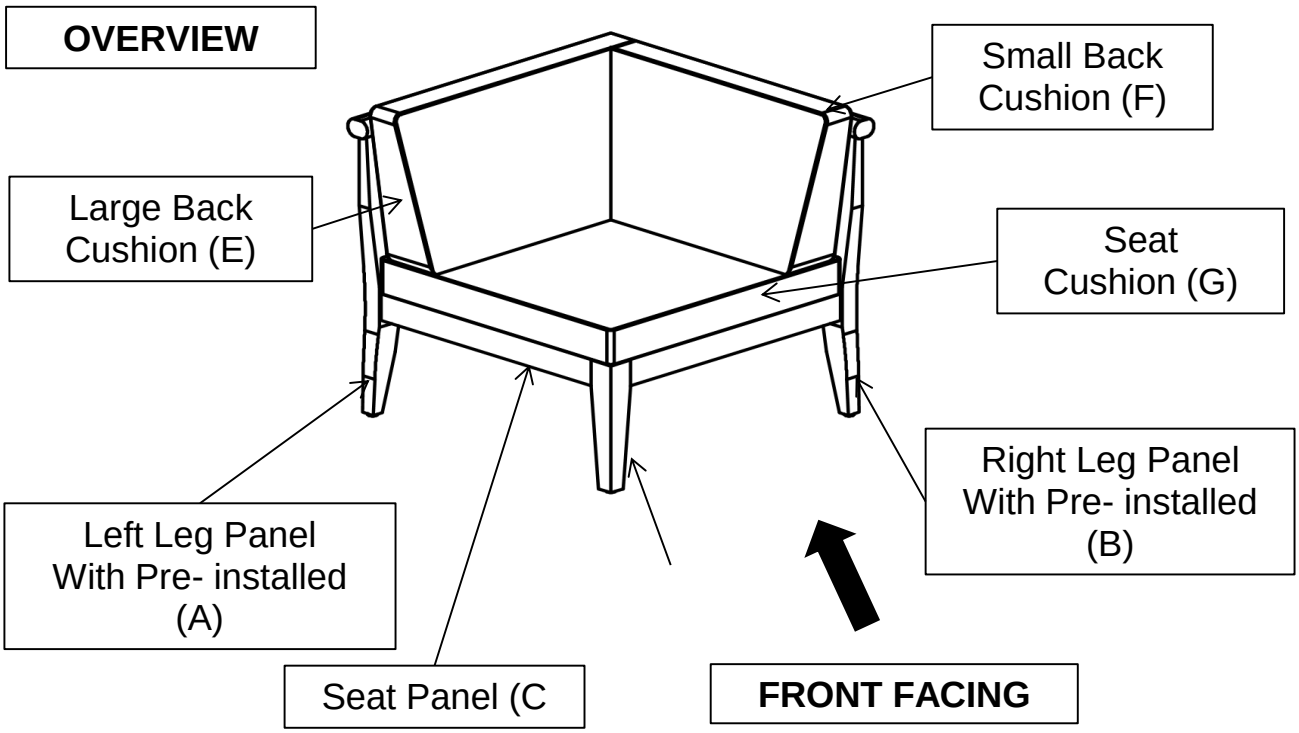

This Corner Chair has multiple parts and may require up to some 30 minutes to assemble. To give you an overview, the above picture is to help you put the various parts into perspective. Please read through the instructions here below to familiarise yourself with the parts and steps before assembly.

Step 1

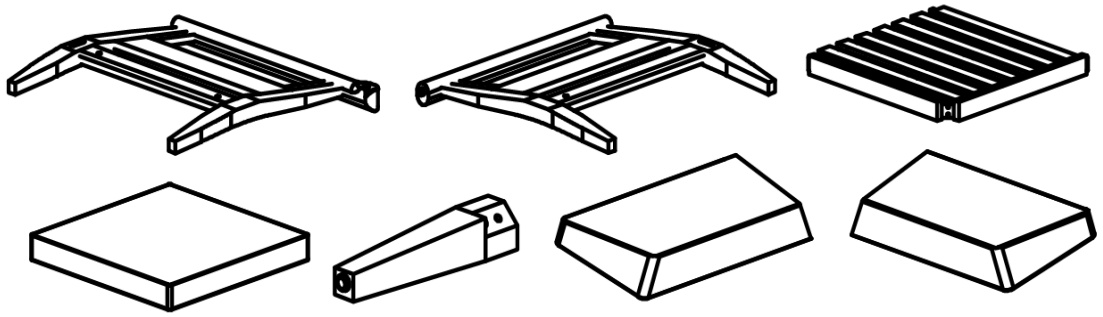

Unpack and place all parts on a clean, non-marring surface.

Step 2

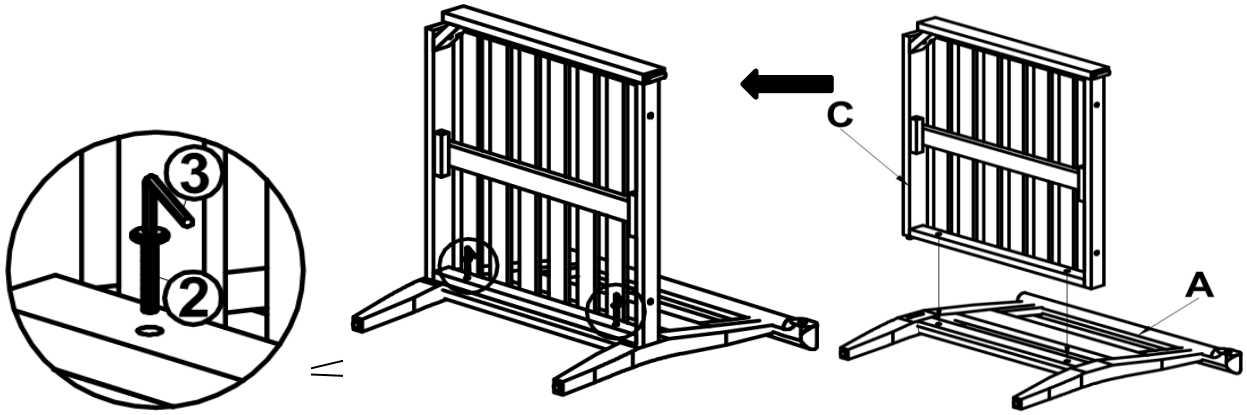

Attach the Seat Panel (C) to the Left Leg Panel With Pre-installed Levellers (A), and secure using Bolts (②) and the Allen Wrench (③).
DO NOT fully tighten the Bolts at this time.

Step 3

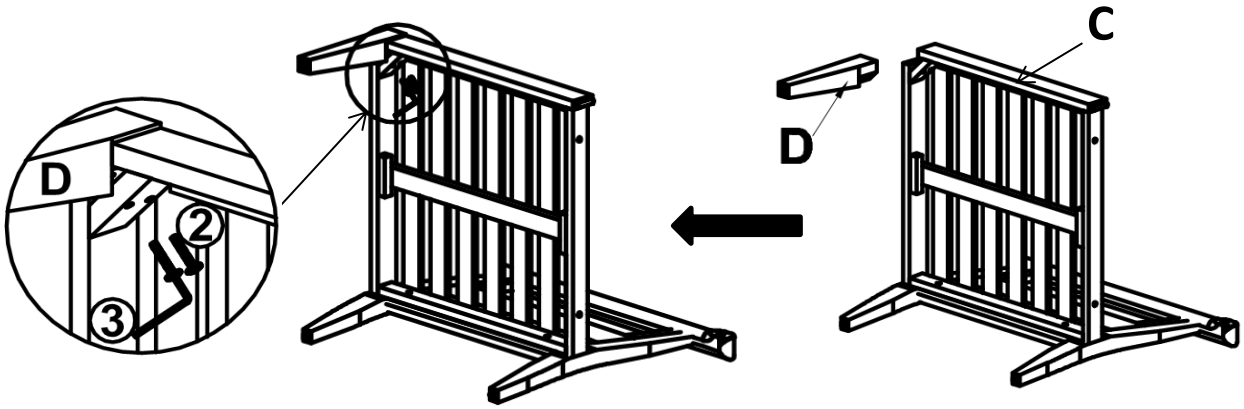

Attach the Leg (D) to the Seat Panel (C), and secure using Bolts (②) and the Allen Wrench (③).
DO NOT fully tighten the Bolts at this time.

Step 4

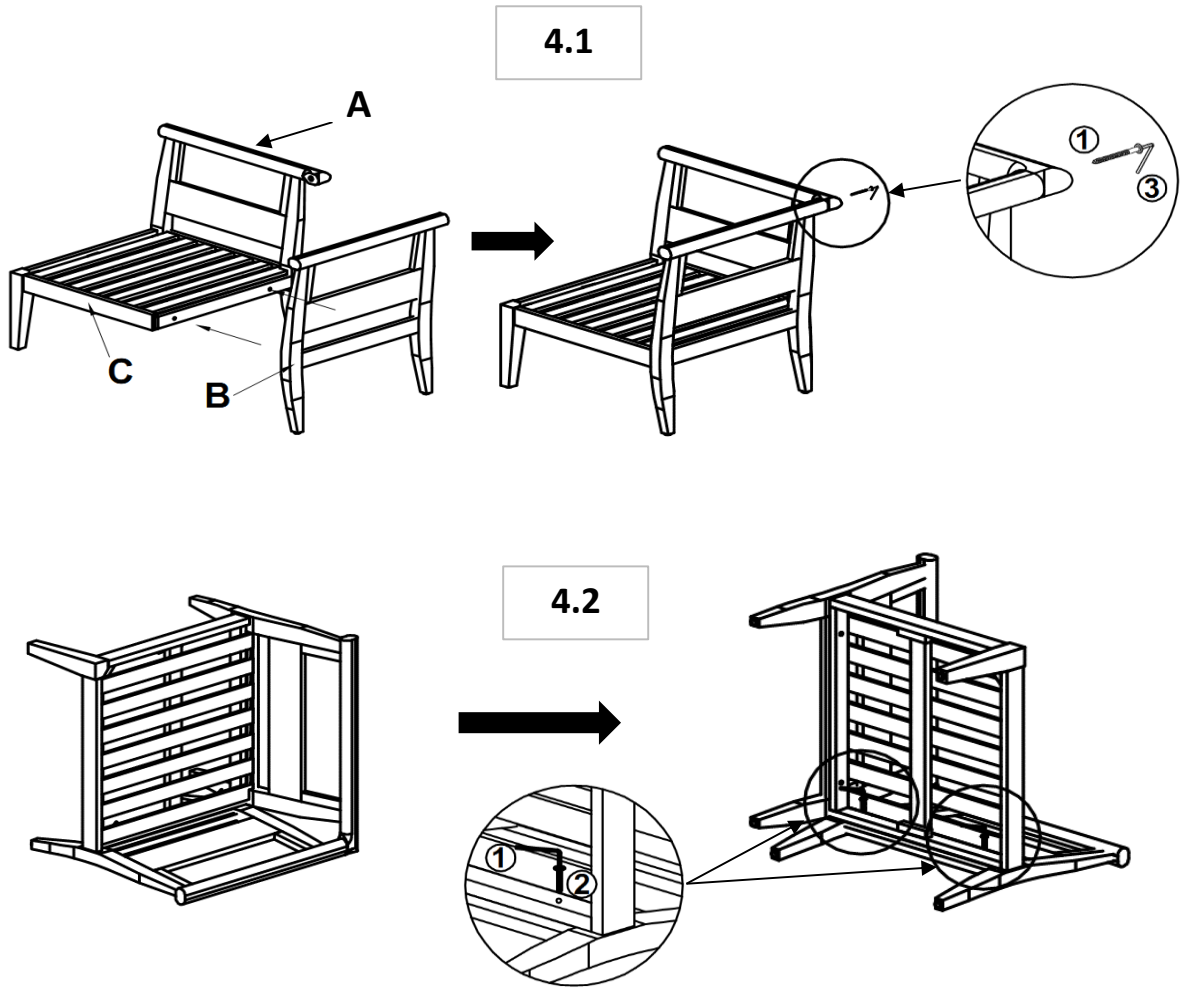

4.1 Stand the assembled part in step 3 up, then with assistance from your adult partner, attach the Right Leg Panel With Pre-installed Levellers (B) to the Left Leg Panel With Pre-installed Levellers (A) using Screws (①) and the Allen Wrench (③).

4.2 Turn the Chair on its side then rotate it to the position as shown above, then secure to Right Leg Panel With Pre-installed Levellers (B) to the Seat Panel (C) using Bolts (②) and Allen Wrench (③).

DO NOT fully tighten the Bolts at this time.

Step 5

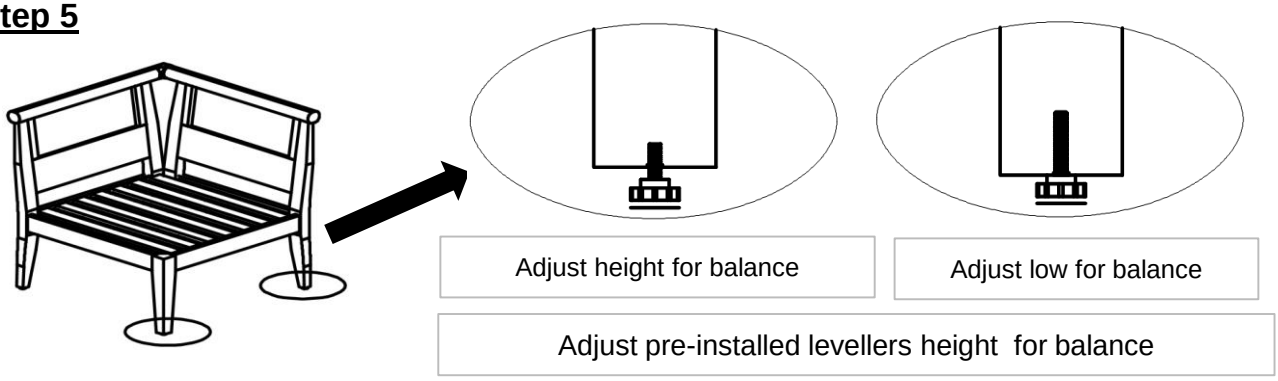

Stand the Corner Chair up with assistance from your adult partner.
Exert pressure floorwards, onto the Corner Chair with both your hands.
This pressure will help the Legs and Corner Chair reach full alignment status.
Check for wobbles on a LEVEL surface.
If no wobbles are found proceed to tighten all Bolts and screws in a sequential manner, until evenly secured.
When tightening the Bolts and screws, tighten sequentially.
Do not tighten any Bolt or screw fully and then move on towards the next one.
If there are any wobbles after tightening, loosen the Bolts and screws and execute the same above process.
Adjust the Levellers until the Corner Chair is well balanced.
To adjust the Levellers, get assistance from an adult partner to lift/lean and hold the Corner Chair while you are working.

Step 6

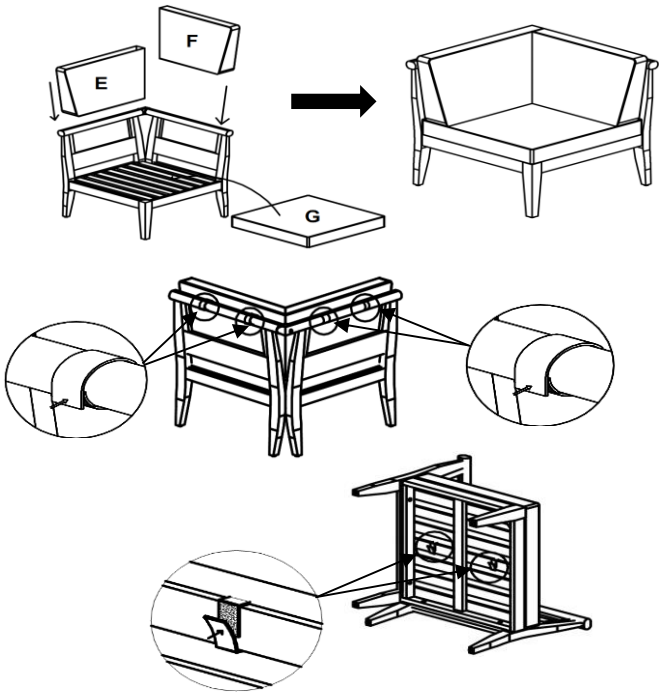

Place the Seat Cushion(G), the Large Back Cushion (E) and the Small Back Cushion (F) onto the Seat Panel (C) as shown in the above picture.
Connect the magic tape straps of the Back Cushions and the Seat Cushion(G) to the Left Leg Panel (A), Right Leg Panel (B) and the Seat Panel(C) as shown in the above picture.
Your Corner Chair is ready for use.
This Corner Chair can only be used on a flat, level surface.

Step 7

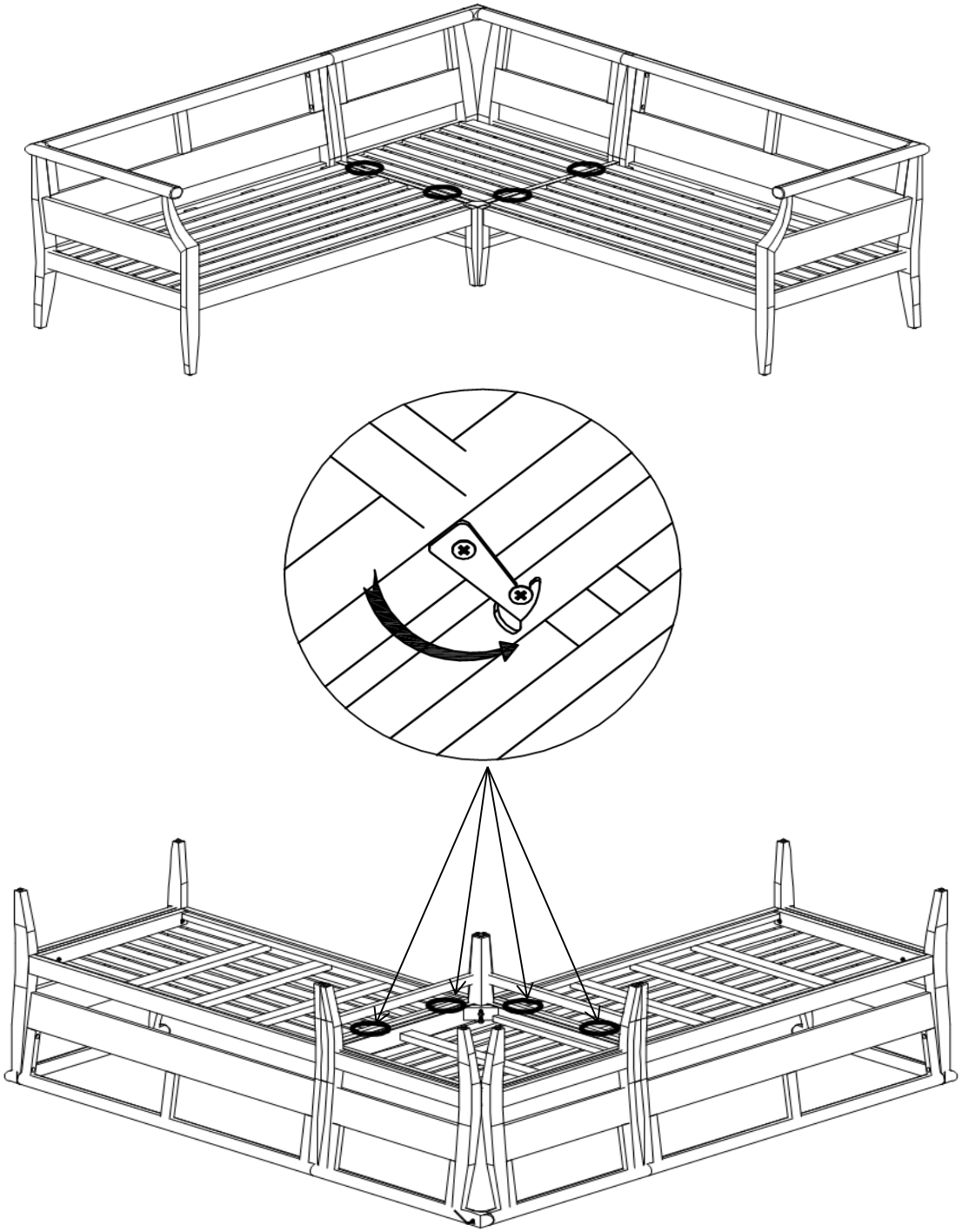

Note: This is an optional step in case you want to connect all seats in a set together and should be done before placing the cushions .
With assistance from your adult partners, turn all seats up side down, then use the pre-fixed clips to connect the them together.

Care & Maintenance

- Do not put hot items directly on furniture surface.
- Do not clean furniture with harsh cleansers or polish.
- To obtain the longest lifespan of your outdoor prodcts, minimizing exposure to direct sunlight is recommended.
- Children should not climb or jump on the furniture.
- Do not write on furniture without a padded barrier to protect the surface.
- To obtain the longest lifespan of your outdoor products, avoid extended and lengthy exposure to rain, snow, and direct sunshine. Whenever possible cover the product and /or place under patio or awnings.
- Not for commercial use. For residential use only.
- Stains may be removed with mild soap solution and damp cloth.
- Dust and pick-up spills using a clean, non-colored, lint-free cloth .