INSTRUCTION MANUAL

BUILT-IN BEVERAGE COOLER

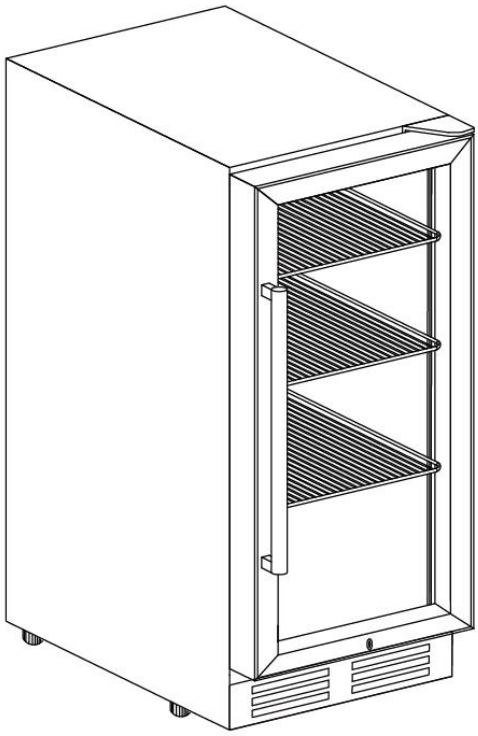

MODEL: NPSING02

Read this manual and follow all safety rules and operating instructions before the first use of this beverage cooler.

TABLE OF CONTENTS

IMPORTANT SAFETY INSTRUCTIONS	3
PRODUCT DIAGRAM	5
INSTALLATION INSTRUCTIONS	6
Before Using Your Beverage cooler	6
To Install Stainless Steel Handle	6
To Install Your Beverage cooler	7
OPERATION INSTRUCTIONS	9
Controls	9
Storage	10
Door Lock	10
Shelves	10
CARE & MAINTENANCE	11
Cleaning Your Beverage cooler	11
Power Failure	11
Vacation Time	11
Moving Your Beverage cooler	12
Energy Saving Tips	12
TROUBLESHOOTING GUIDE	13-14

IMPORTANT SAFETY INSTRUCTIONS

Your safety and the safety of others are very important.

This Beverage cooler complies with the applicable safety requirements and is safe for daily use. However, basic safety precautions should always be followed when using an electrical appliance to reduce the risk of fire, electric shock, and personal injury.

DANGER

- Plug into an individual electrical outlet with a voltage rating that matches the rating label on the cooler (**115/120V AC only, 60Hz, 10A**). Use receptacles that cannot be turned off by a switch or pull chain. Be sure that the plug is fully inserted into the receptacle.
- Plug into a grounded 3-prong outlet. Do not under any circumstances cut or remove the third ground prong from the power cord supplied.
- To protect against electric shock, do not immerse the Beverage cooler, plug or cord in water or other liquids.
- Never unplug the cooler by pulling the power cord. To disconnect the Beverage cooler, always grip the plug firmly and pull straight out from the wall outlet.
- Repair or replace immediately all power cords that have become frayed or otherwise damaged. Do not use a cord that shows cracks or abrasion damage along its length or at either end.
- Do not connect or disconnect the electric plug when your hands are wet. Do not operate the cooler with wet hands, while standing on a wet surface or while standing in water.
- Unplug the Beverage cooler or disconnect power before cleaning or servicing. Failure to do so can result in electrical shock or death.
- When moving the Beverage cooler, be careful not to roll over or damage the power cord.
- Never clean Beverage cooler parts with flammable fluids. These fumes can create a fire hazard or explosion. And do not store or use gasoline or other flammable vapor and liquids in the vicinity of this or any other appliance. The fumes can create a fire hazard or explosion.
- Do not attempt to repair or replace any part of your Beverage cooler unless it is specifically recommended in this manual. All other servicing should be referred to a qualified technician.
- An empty Beverage cooler can be dangerous to children. Remove any latches, lids, locks, and/or doors from unused or discarded Beverage coolers to prevent child entrapment and suffocation. Never allow children to operate, play with or crawl inside this Beverage cooler.

⚠ WARNING ⚠

- Do not use this wine cooler for other than its intended purpose. For indoor, household use only.
- Move this wine cooler by 2 people. Failure to do so can result in injury.
- Place this wine cooler in a well-ventilated area with temperatures above 15°C (60°F) and below 32°C (90°F).
- To ensure proper ventilation for your wine cooler, the front of the cooler must be completely unobstructed.
- This wine cooler must be installed in an area away from wind, rain, water spray or drips.
- The wine cooler should not be located next to ovens, grills or other sources of high heat.
- Do not kink or pinch the power supply cord of wine cooler.
- It is important for the wine cooler to be leveled in order to work properly. You may need to make several adjustments to level it.
- This wine cooler is designed for storing and cooling wines. Do not store perishable food or medical products inside the cooler.
- When disposing of refrigeration wine coolers, special handling is often required. It is the consumer's responsibility to comply with federal and local regulations when disposing of this product.
- **WARNING:** Risk of child entrapment and suffocation. Before you throw away this or an old cooler, remove the door. Leave the shelves in place, so that children may not easily climb inside.

⚠ FLAMMABLE REFRIGERANT GAS ⚠

DANGER - Risk of fire or explosion. Flammable refrigerant used.

DO NOT use mechanical devices to defrost refrigerator. DO NOT puncture refrigerant tubing.

DANGER - Risk of fire or explosion. Flammable refrigerant used. To be repaired only by trained service personnel. DO NOT puncture refrigerant tubing.

CAUTION - Risk of fire or explosion. Flammable refrigerant used. Consult repair manual / owner's guide before attempting to service this product. All safety precautions must be followed.

CAUTION - Risk of fire or explosion. Dispose of property in accordance with federal or local regulations. Flammable refrigerant used.

CAUTION - Risk of fire or explosion due to puncture of refrigerant tubing. Follow handling instructions carefully. Flammable refrigerant used.

CAUTION - To prevent a child from being entrapped, keep out of reach of children and not in the vicinity of the cooler.

PRODUCT DIAGRAM

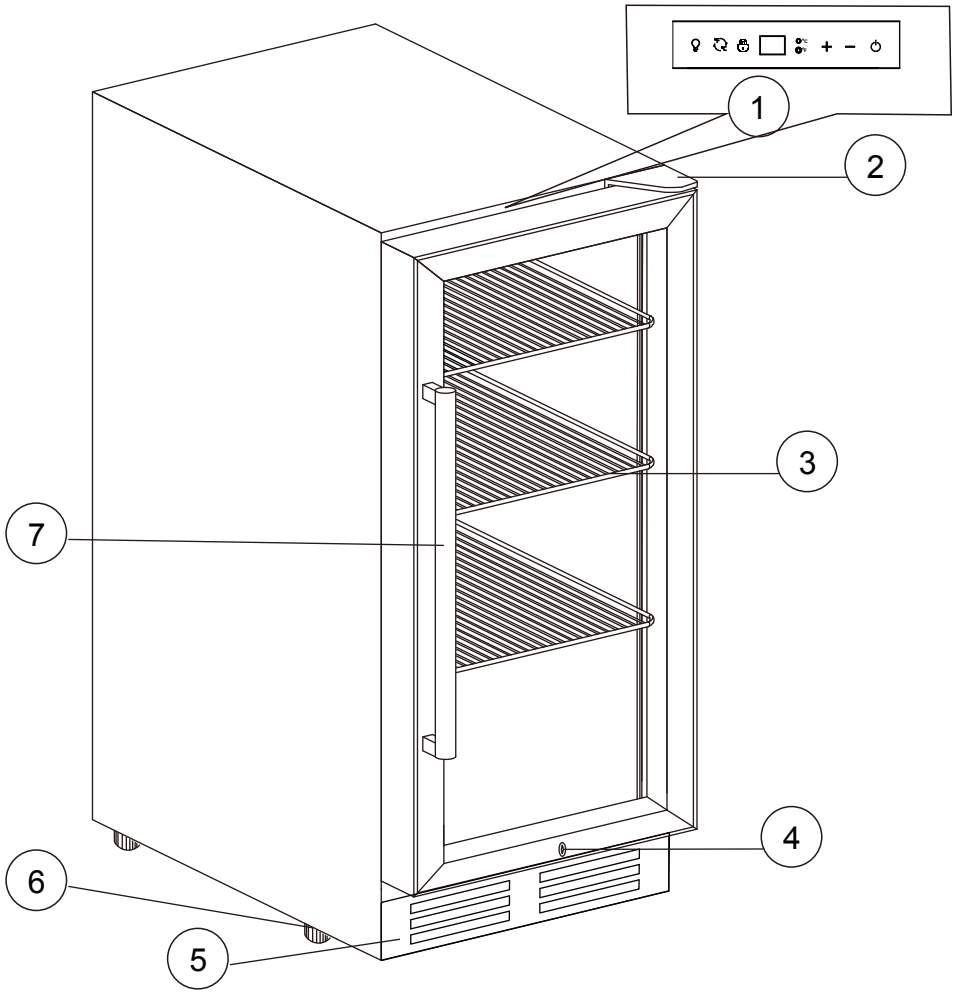

1	Control Panel	2	Top Hinge
3	Wire Shelves	4	Safety Child Lock
5	Exhaust Window	6	Leveling Legs
7	Glass Door with Handle		

INSTALLATION INSTRUCTIONS

Before Using Your Beverage cooler

- Remove the exterior and interior packaging.
- Check to be sure you have all of the following parts:
  - 3 Shelves
  - 2 Keys
  - Stainless Steel Handle
  - Instruction Manual
  - 2 Extra Screws for Installing Handle
- **IMPORTANT:** Before connecting this Beverage cooler to a power source, let it stand upright for approximately **24 hours**. This will reduce the possibility of a malfunction in the cooling system from handling during transportation.
- Clean the interior surface with lukewarm water using a soft cloth.
- Install the handle on the left side of the door.

To Install Stainless Steel Handle

1) Pull away the door gasket in the area where the handle is to be installed, as Illustration #1. The gasket is easily removed by hand, no tools are necessary.

2) Align the handle with the preinstalled screws on the door frame. Tighten the screws with a screwdriver until the handles secure tightly against the door frame, as Illustration #2. (Do NOT over tighten as this will cause damage to the handle assembly).

3) Replace the door gasket to its original position.

Note: This Beverage cooler includes stainless steel handles that are not required to operate this Beverage cooler. If you choose not to use the handle supplied, simply follow step 1 to access the pre-installed screws and remove them and then place 2 decorative plugs (NOT included) into the two holes separately. Continue on to step 3 to replace the door gasket to its original position.

Illustration #1

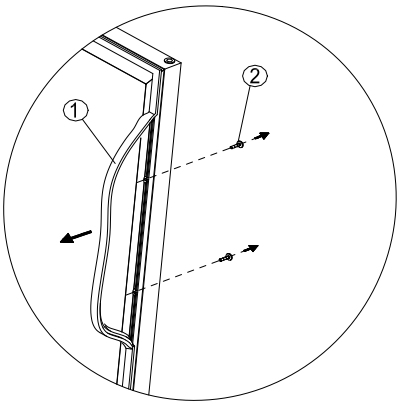

Illustration #2

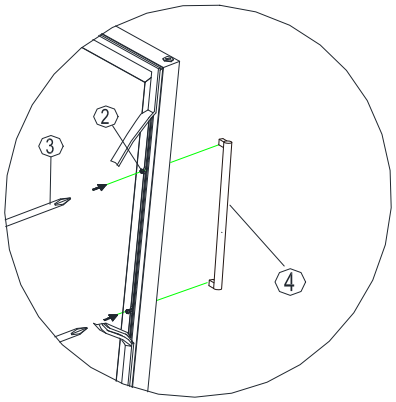

1 Gasket

2 Screw

3 Screw Driver

4 Handle

To Install Your Beverage cooler

- This Beverage cooler is designed for free standing or built-in (fully recessed) installation.
- Place your Beverage cooler on a solid and level floor that is strong enough to support it when it is fully loaded. This will ensure a vibration-free and noise-free operation. Adjust the leveling legs in and out to stabilize the cooler horizontally. If the legs are not properly adjusted, the cooler may be unstable and result in excess noise or vibration.
- Locate the Beverage cooler away from direct sunlight and sources of heat (stove, heater, radiator, etc.). Direct sunlight may affect the acrylic coating and heat sources may increase electrical consumption. Extremely cold ambient temperatures may also cause the cooler not to perform properly.
- It is not advisable to install this cooler in moist areas or directly adjacent to a kitchen sink, as moisture could cause premature corrosion to the components of your new cooler.
- It is recommended you install the Beverage cooler in a place with temperatures **above 60°F (15°C) and below 90°F (32°C)**, and humidity is under 60%. If the ambient temperature is above or below recommended temperatures, the performance of the cooler may be affected. Placing your cooler in extremely cold or hot conditions may cause interior temperatures to

fluctuate, and the temperature range of 3ºC-18ºC (37ºF-65ºF) may not be reached.

- Connect the Beverage cooler to an exclusive, properly grounded, standard electrical supply (**115 V AC only, 60 Hz**), in accordance with the National Electrical Code and local codes and ordinances. Any questions concerning power and/or grounding should be directed toward a certified electrician or an authorized products service center.

Warning: Improper use of the grounded plug can result in the risk of electrical shock. If the power cord is damaged, have it replaced by an authorized service center.

- The Beverage cooler should always be plugged into its own individual electrical outlet which has a voltage rating that matches the rating label on the Beverage cooler. This provides the best performance and also prevents overloading house wiring circuits that could cause a fire hazard from overheated.
- Do not under any circumstances cut or remove the third ground prong from the power cord supplied.
- Do not use an extension cord or adapter plug. However, if you must use an extension cord, it is absolutely necessary that it be a UL-listed, 3-wire grounding type Beverage cooler extension cord having a grounding type plug and outlet and that the electrical rating of the cord is 10 amperes (minimum) and 120 volts.
- Do not use a cord that shows cracks or abrasion damage along its length or at either end.
- If the Beverage cooler is going to be used in an area that is prone to power surges/outages, it is suggested that you use a power surge protector. The surge protector that you select must have a surge block high enough to protect the Beverage cooler it is connected to. Damages due to power surges are not considered a manufacturer covered defect and will void your product warranty.

OPERATION INSTRUCTIONS

Controls

After plugging the Beverage cooler into a wall outlet, the cooler would turn on automatically and the LCD screen would show the temperature inside of the cooler.

After setting your desired serving temperature, allow the cooler to cool down for **3 to 4 hours** before placing wine bottles in the Beverage cooler.

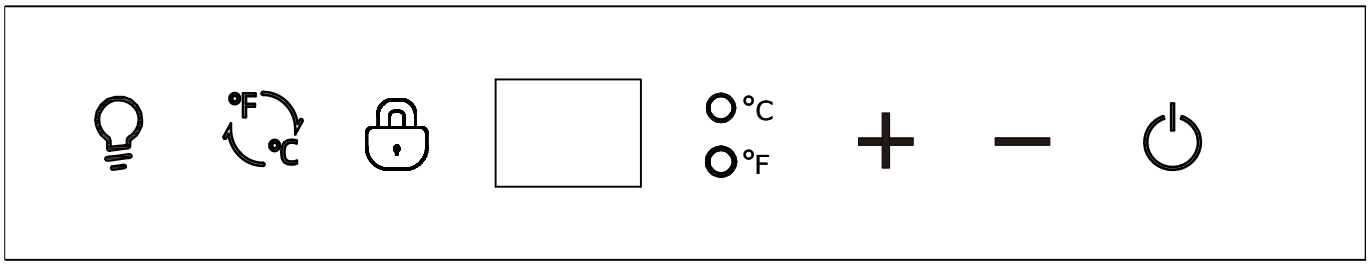

	Press once to turn ON the cooler. Press and hold about 3 seconds to turn OFF the cooler.
	Press to increase or press to decrease the temperature in 1 degree increments between 5°C and 18°C or between 40°F and 65°F.
	Press to begin temperature adjustment and ascertain the current temperature.
	Toggles the temperature display between Celsius and Fahrenheit.
	Press once to turn the interior light ON or OFF.

Storage

Many cans and bottles may differ in size and dimensions. As such the actual number of bottles you may be able to store may vary..

Door Lock

This cooler can be secured with a lock and key. The keys are located inside the plastic bag that contains the Instruction Manual. Insert the key into the lock and turn it clockwise to lock the door, making sure the metal pin is engaged completely. To unlock the door, do the reverse. Remove the key and put it in a secure location.

Shelves

To remove the shelves from the track, pull each shelf out to the shelf post,as shown in figure A. Lift it up again, then slowly pull the shelf out, as shown in figure B.

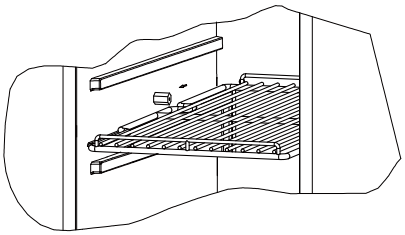

Figure A

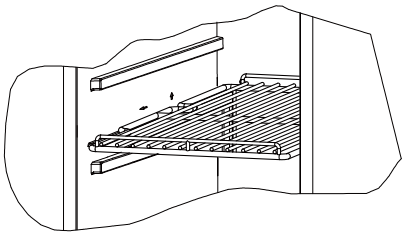

Figure B

CARE & MAINTENANCE

Cleaning Your Beverage cooler

IMPORTANT: Always unplug the cooler before cleaning or performing maintenance. Never use harsh cleansers or scouring pads to clean any part of the cooler.

- Turn off the power, unplug the Beverage cooler, and remove all items including shelves.
- Wash the inside surfaces with warm water and baking soda solution. The solution should be about 2 tablespoons of baking soda to a quart of water.
- Wash the shelves with a mild detergent solution.
- Wring excess water out of the sponge or cloth when cleaning the area near the controls, or any electrical parts.
- Wash the outside cabinet with warm water and a mild liquid detergent. Rinse well and wipe dry with a clean soft cloth. Do not use steel wool or steel brush to rub the stainless steel, which will contaminate the stainless steel with steel particles and rusting may occur.

Power failure

Most power failures are corrected within a few hours and should not affect the temperature of your Beverage cooler. If the power is off for an extended period of time, proper steps should be taken to protect your contents.

Vacation Time

Leave the Beverage cooler operating during vacations of less than three weeks. For periods longer than this, turn the Beverage cooler off and leave the door slightly ajar to prevent odor from building inside the Beverage cooler.

Moving Your Beverage cooler

- Remove all items (bottles) from the cooler;
- Securely tape down any loose items, such as shelves, inside the cooler.
- Turn the adjustable leg up to the base to avoid damage.
- Tape the door shut.
- Ensure that the Beverage cooler stays securely in the upright position during transportation. Protect the outside of the Beverage cooler with a blanket or a similar item.

Energy saving tips

- The cooler should be located in the coolest area of the room away from heat sources or direct sunlight.

- Ensure that the cooler is adequately ventilated. Never cover air vents.

- Only open the cooler door for as long as necessary. Frequent opening of the door will affect internal temperature.

TROUBLESHOOTING GUIDE

PROBLEM	POSSIBLE CAUSE	SOLUTION
The Beverage cooler does not run.	The Beverage cooler may not be plugged in, or plug may be loose.	Ensure the Beverage cooler has been plugged in properly.
	The Beverage cooler is turned off.	Press ⏻ to turn on the cooler.
	House fuse blown or tripped circuit breaker.	Check/replace fuse. Reset circuit breaker.
The Beverage cooler is not cold enough.	External environment may require a higher setting.	Set a colder setting. Allow several hours for the temperature to stabilize.
	The Beverage cooler has recently been disconnected for a period of time.	It takes 3-4 hours for the Beverage cooler to cool down completely.
	Prolonged or frequent door openings.	Open the door less often.
	The door is not closed completely.	Close the door properly.
	The door gasket does not seal properly.	Check the door gasket. Clean or change gasket if necessary.
The compressor turns on and off frequently.	The room temperature is hotter than normal.	It's normal for the Beverage cooler to work harder under these conditions.
	A large amount of contents has been added to the cooler.	A large amount of contents cause the Beverage cooler to run more until the desired temperature is reached.
	Prolonged or frequent door openings.	Open the door less often.
	The temperature has not been set correctly.	Press either + or − to check the set temperature, and set the temperature properly.
	The door is not closed completely.	Close the door properly.
	The door gasket does not seal properly.	Check the door gasket. Clean or change gasket if necessary.

PROBLEM	POSSIBLE CAUSE	SOLUTION
The light does not work.	Not plugged in.	Plug the cooler in.
	The circuit breaker tripped or a blown fuse.	Check the breaker and/or fuses.
	The light button is "OFF".	Press to turn the light ON.
Vibrations.	The cooler is not leveled.	Check to assure that the cooler is level.
	The bottles are vibrating.	Make sure the bottles don't touch each others.
	There is an object under the cooler.	Remove the object under the cooler.
The cooler seems to make too much noise.	The cooler is not level.	Level the cooler.
	Normal noise from the flow of the refrigerant	The rattling noise may come from the flow of the refrigerant, which is normal. As each cycle ends, you may hear gurgling sounds caused by the flow of refrigerant in your cooler. Contraction and expansion of the inside walls may cause popping and crackling noises.
The door will not close properly.	The cooler is not level.	Level the cooler.
	The door was reversed and not properly installed.	Re-install the door properly.
	The gasket is dirty.	Clean the door gasket.
	The shelves are out of position.	Place the shelves properly.
Moisture build up on interior or exterior of the Beverage cooler.	This is normal during high humidity periods.	Lower the room humidity.
	This is normal in high temperature environment.	Move the cooler to a cooler place, and avoid heat and sunlight.
	Prolonged or frequent door openings.	Open the door less often.
	The door does not seal completely.	Check door gaskets for proper seal.
Error Code: E1-E2-E3-E4-E7-E8	A sensor has failed.	Contact the customer service