SNUGVISTA

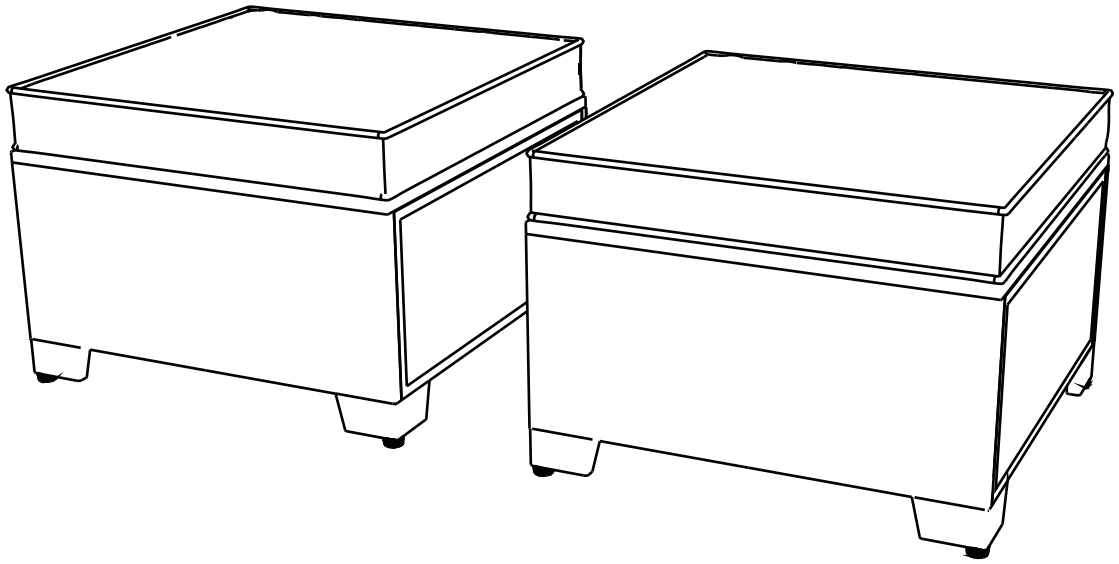

Patio Rattan Ottoman Product Manual

Model:HB-WSOTM

Thank you for purchasing our outdoor rattan ottoman combo! Please read these instructions carefully to ensure that your furniture is assembled, used, and maintained safely.

WARNING

WARNINGS

Not suitable for children
This footrest set is for adults only. Avoid allowing children to play or climb furniture to reduce the risk of injury.
Do not stand on furniture
The furniture is designed for sitting. Do not stand, jump, or put excessive weight on the armrests or backrests.
Avoid modifications
Do not modify or attempt to repair the footrest set. Contact customer service for any necessary repairs or replacement parts.

Important Safety Information

Choking Hazard: Keep packaging materials, small parts, and screws away from children. This product contains parts that could be harmful if swallowed.
Adult Supervision: Always supervise children around the furniture, especially when playing or climbing.
Stable Surface: For safety and stability, ensure the sofa set is placed on a level, stable surface. Avoid placing it on uneven or slippery ground.
Weight Limit: Please do not exceed the recommended weight capacity for each seating unit and coffee table to prevent damage. Refer to the product's weight specifications for more details.
Cushion Safety: Ensure that cushions and pillows are securely in place before using the furniture. Avoid using the product if any cushions are damaged or misplaced.
Protect from Weather: Although the rattan material is designed for outdoor use, we recommend covering the sofa set or moving it to a sheltered area during heavy rain, snow, or extreme sunlight exposure to protect the cushions and prolong the life of the set.
Proper Assembly: Always ensure that all components are properly assembled and that all screws and bolts are tightened securely before use. Check for loose screws periodically.

CONTENTS

Important.....1

List of Parts in Box.....2

List of Parts in Box.....3

Installation.....4

CONTACT US

If you have any questions or concerns regarding our product, please don’t hesitate to contact our customer service team at [service@outsofas.com]. We are committed to providing excellent service and ensuring your satisfaction.

E-mail:service@outsofas.com

Parts List

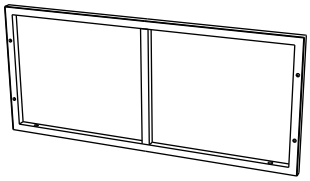

Long Side Part

Ⓐ × 4

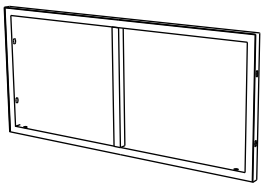

Short Side Part

Ⓑ × 4

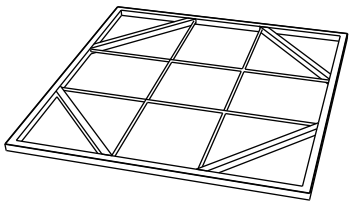

Ottoman Seat Part

Ⓒ × 2

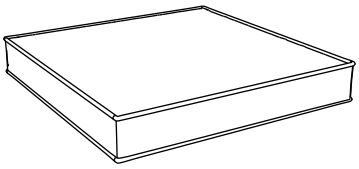

Seat Cushion

Ⓛ × 2

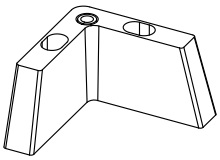

High L-Shaped Feet

Ⓙ × 8

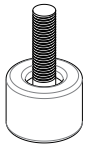

Adjustable Screws

Ⓟ × 8

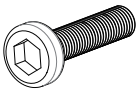

Bolt M6×35

Ⓢ × 26

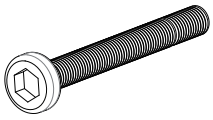

Bolt M6×60

Ⓣ × 18



Washer Nut

Ⓡ × 18

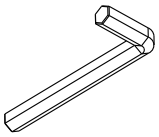

Spanner

Ⓦ × 1

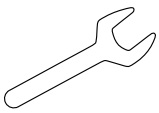

Wrench

Ⓥ × 1

Restoration of rattan

Ⓨ × 4

Instruction

Step 1： Use bolts (S) to assemble the long side part (A) and short side part (B) of the ottoman.

NOTE: Don't tighten it.

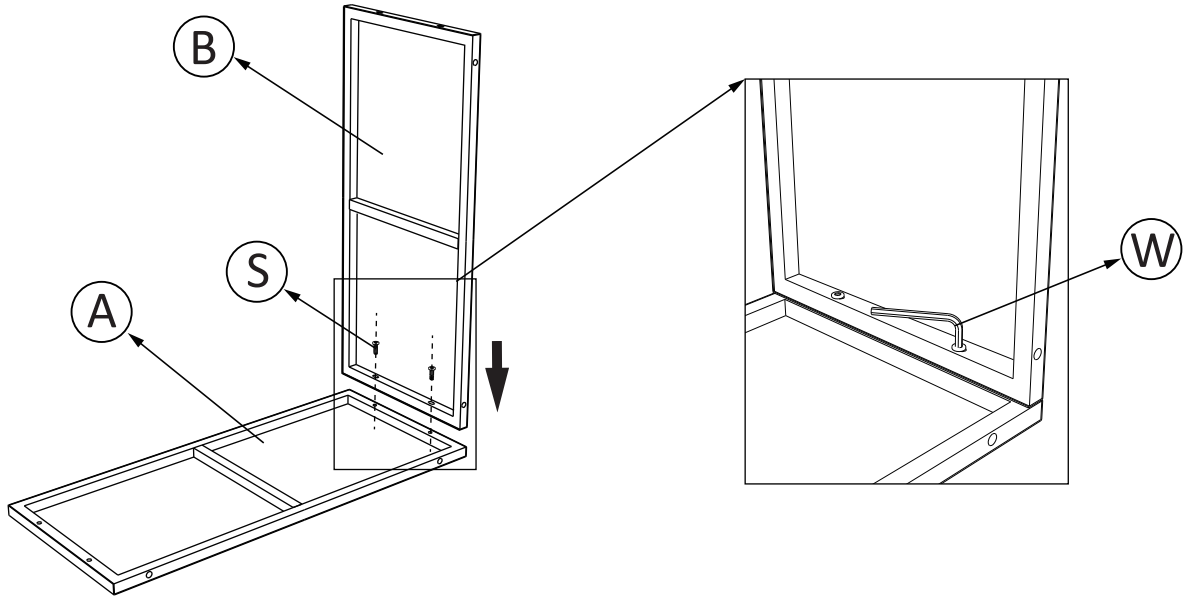

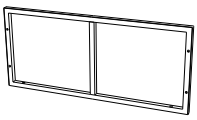 Ⓐ × 1

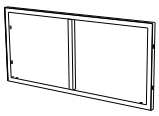 Ⓑ × 1

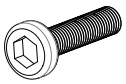 Ⓢ × 2

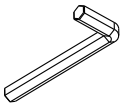 Ⓦ × 1

Step 2： In the same step, use the bolt (S) to install the short side part (B) on the other side.

NOTE: Don't tighten it.

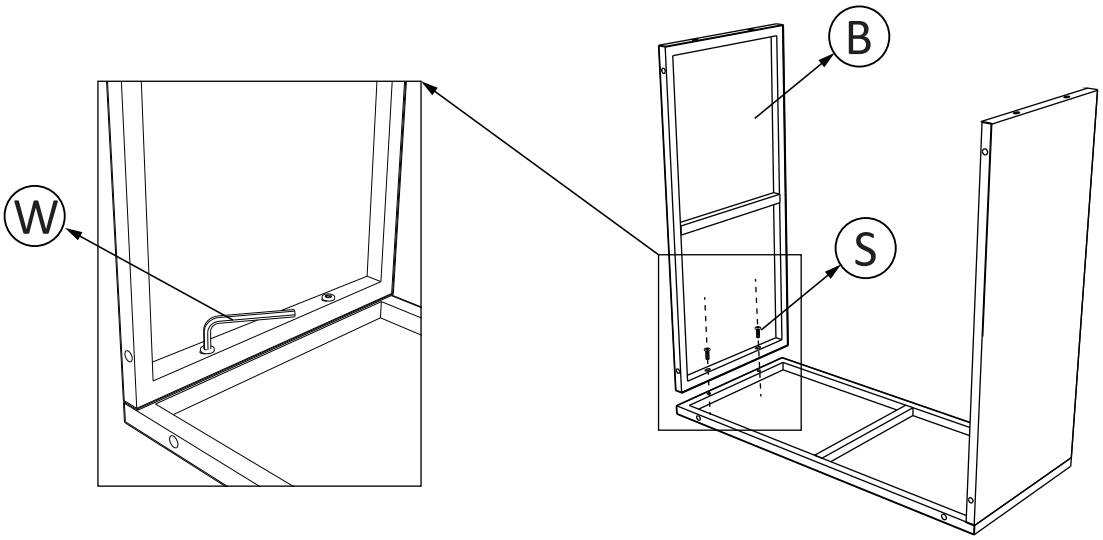

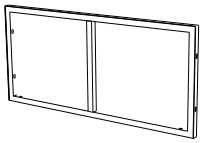 Ⓑ × 1

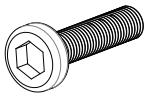 Ⓢ × 2

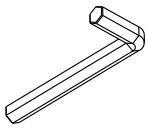 Ⓦ × 1

Instruction

Step 3: Use the bolt(S) to install the long side part (A) to the other side of the short side part (B).

NOTE: Don't tighten it.

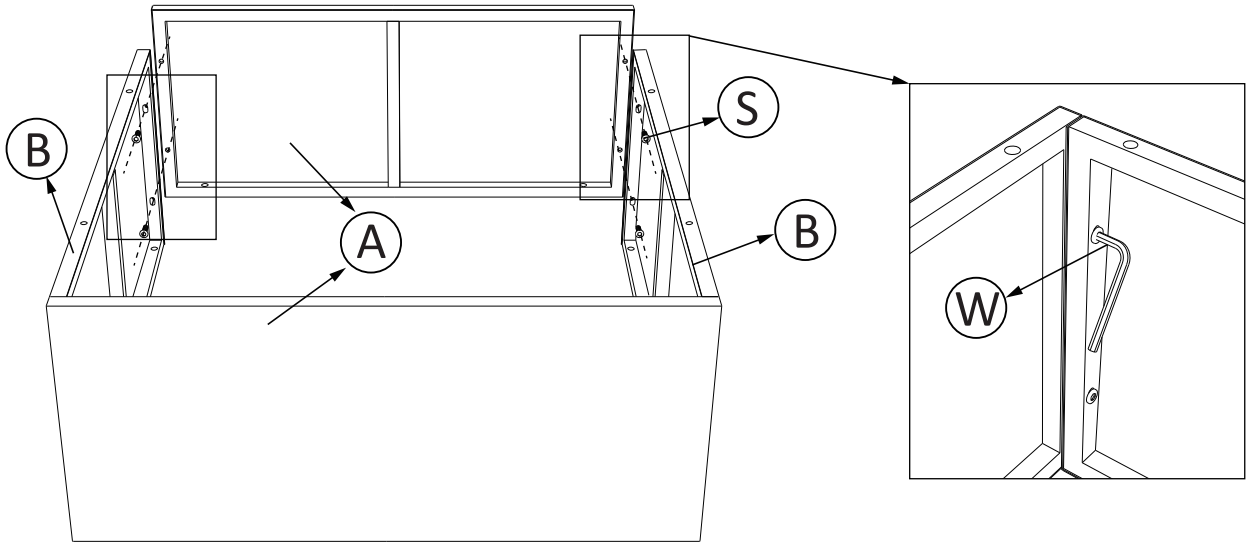

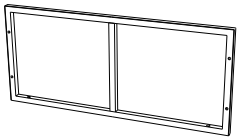 Ⓐ × 1

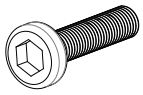 Ⓢ × 4

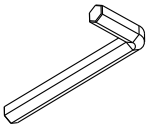 Ⓦ × 1

Step 4: The ottoman seat part (C) is aligned with the hole above the long side part and is mounted using a bolt (S).

NOTE: Please tighten the bolts.

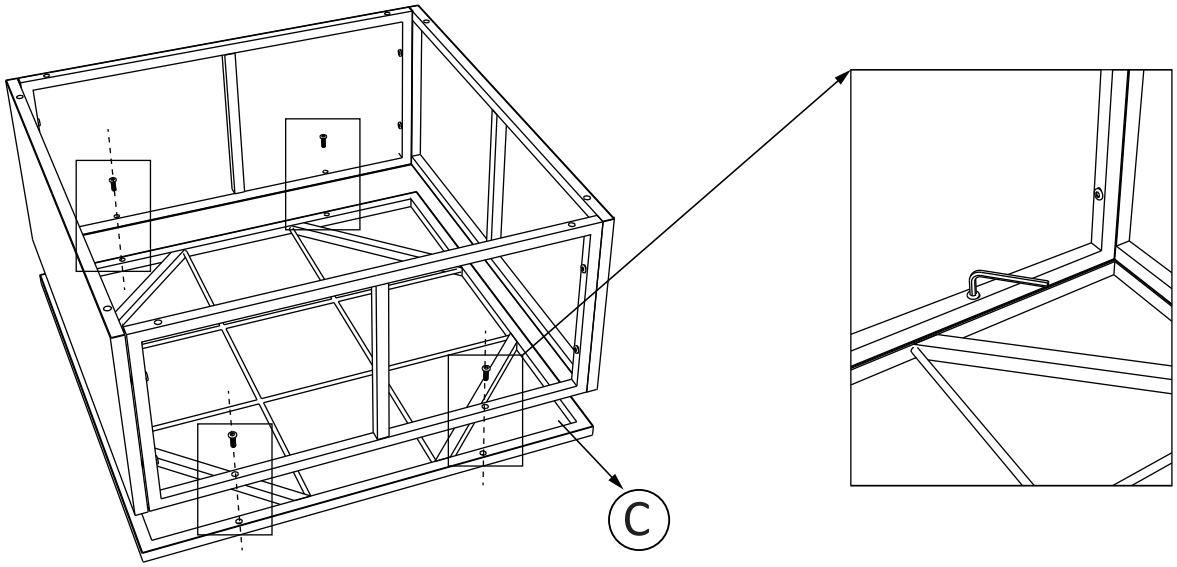

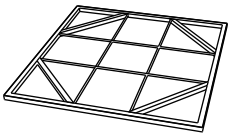 Ⓒ × 1

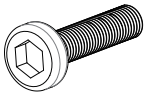 Ⓢ × 4

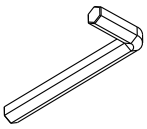 Ⓦ × 1

Instruction

Step 5: Install the foot pad (J) into the hole under the foot rest side part through the bolt (T) and nut (R), tighten the bolt, and then screw the adjusting bolt (P) into the hole position below the foot pad (J).

NOTE: Please tighten the bolts.

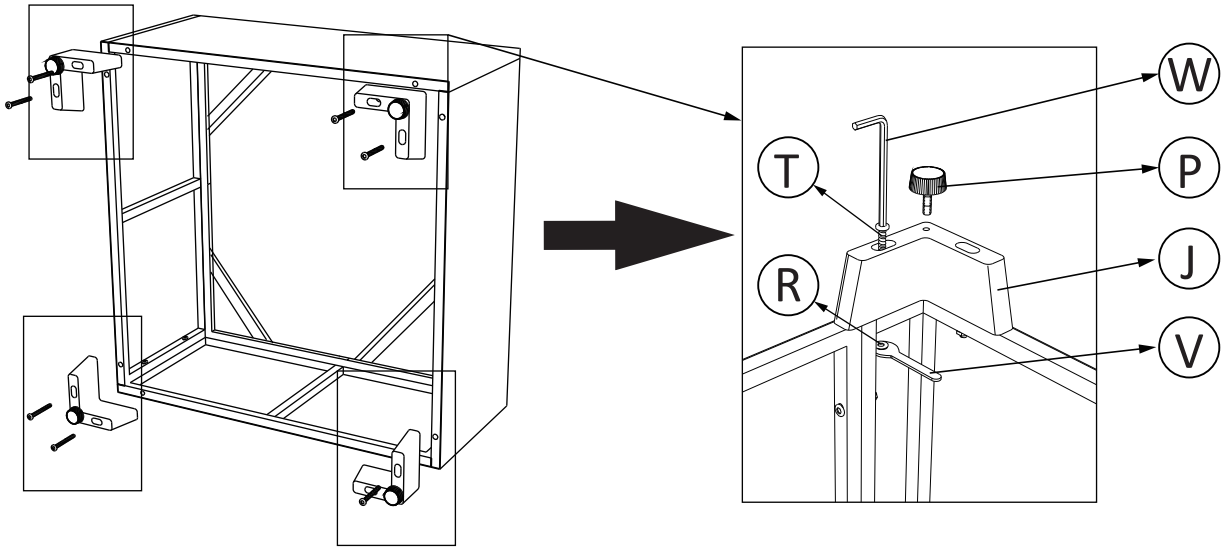

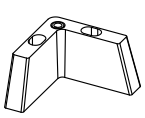
Ⓙ × 4


Bolt M6×60
Ⓣ × 8

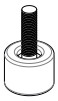
Ⓟ × 4


Ⓡ × 8

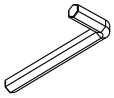
Ⓦ × 1


Ⓥ × 1

Step 6: Tie the elastic band under the ottoman seat cushion (L) to the olive mouth of the seat part (C), and after the ottoman is installed, follow the steps above to install another ottoman.

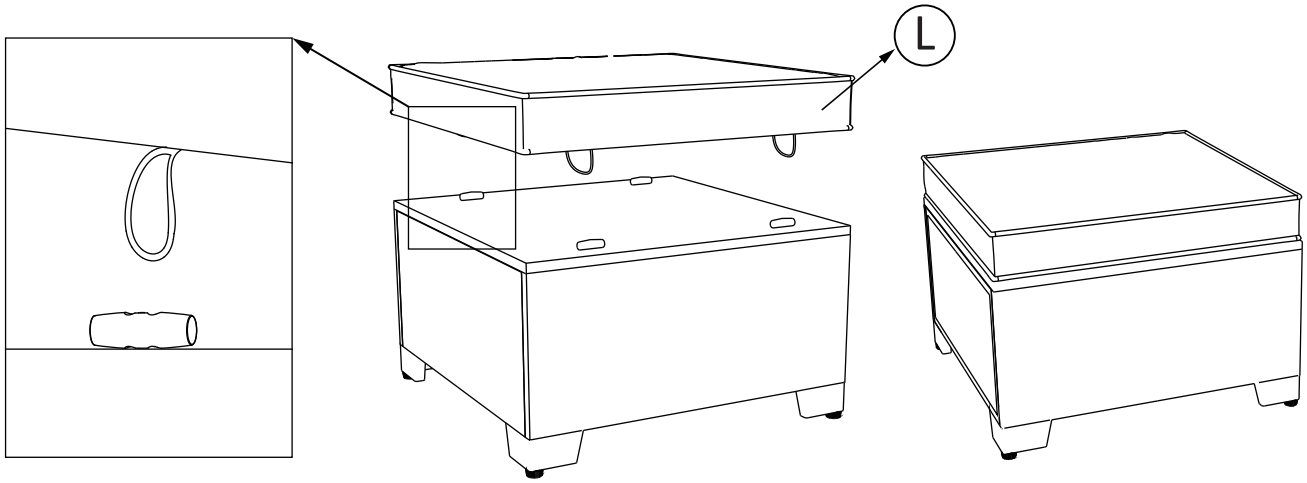

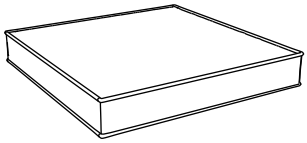
Ⓛ × 1

Combinations and Permutations

1 Sofa 6-piece set and 2 Ottomans

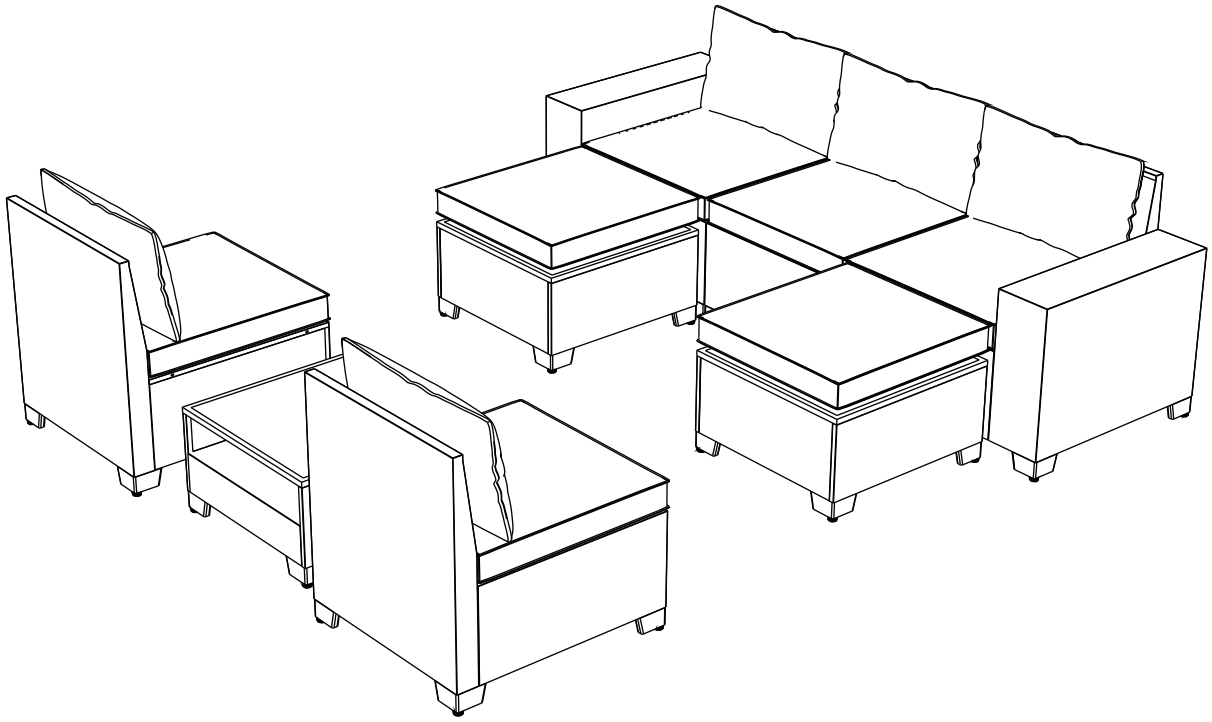

1 Rocking chair 3-piece set and 2 Ottomans

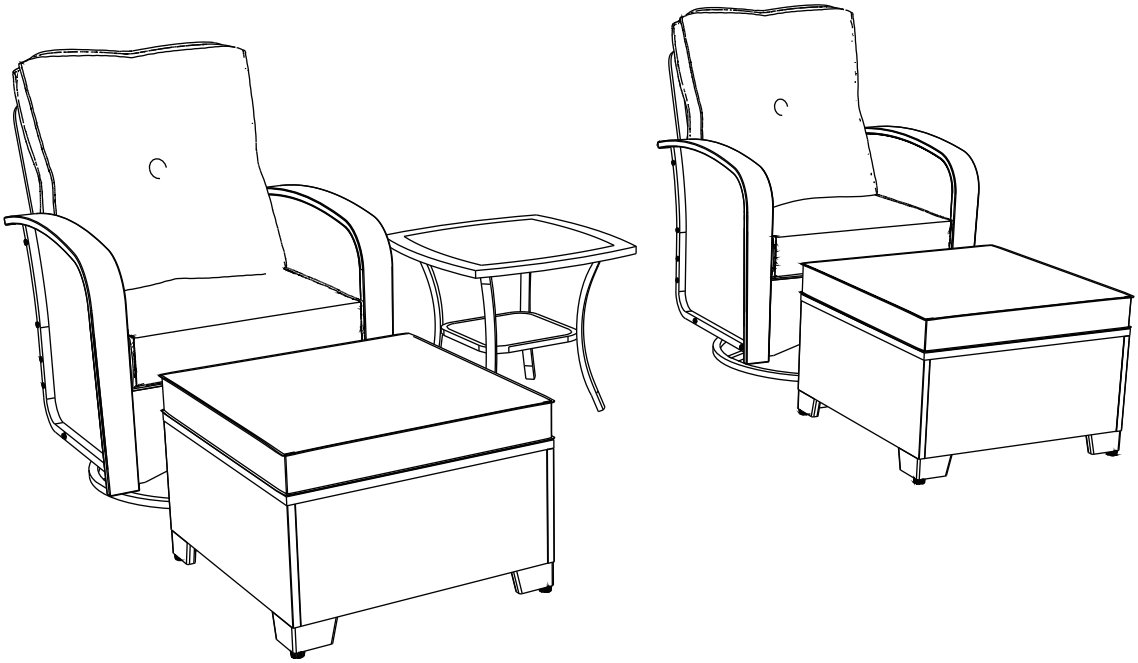

A variety of combinations are available. For more matching options, please visit the store's homepage. You can choose combinations suitable for your family. If you have any questions, please contact our customer service, and we will reply to you on the same day.