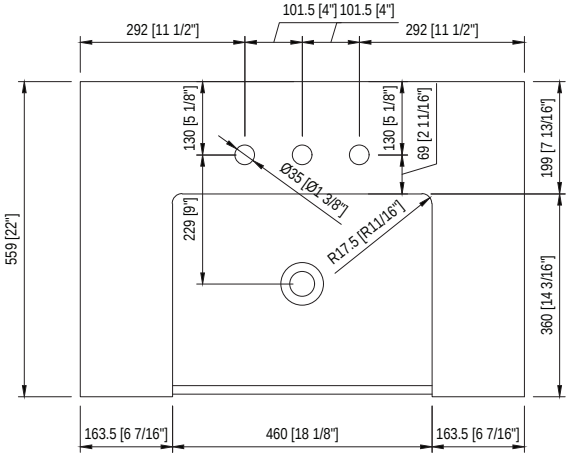

TOP VIEW

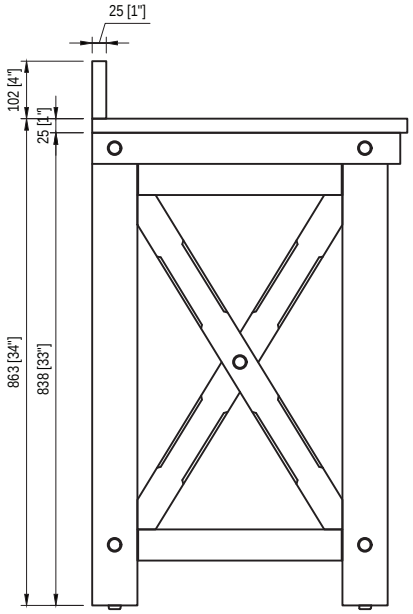

SIDE VIEW

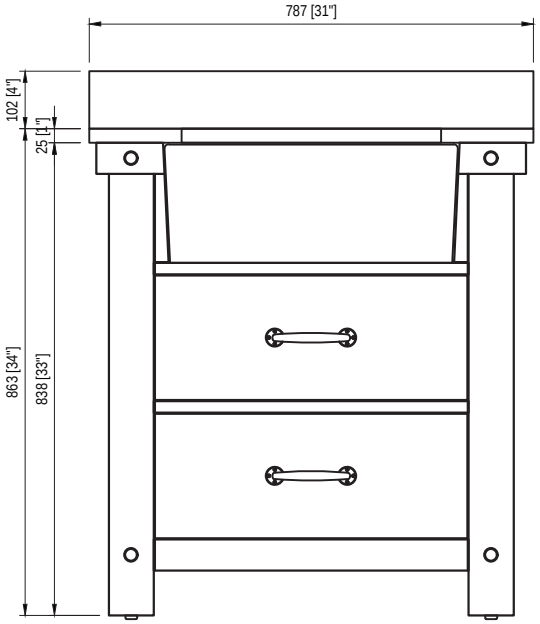

FRONT VIEW

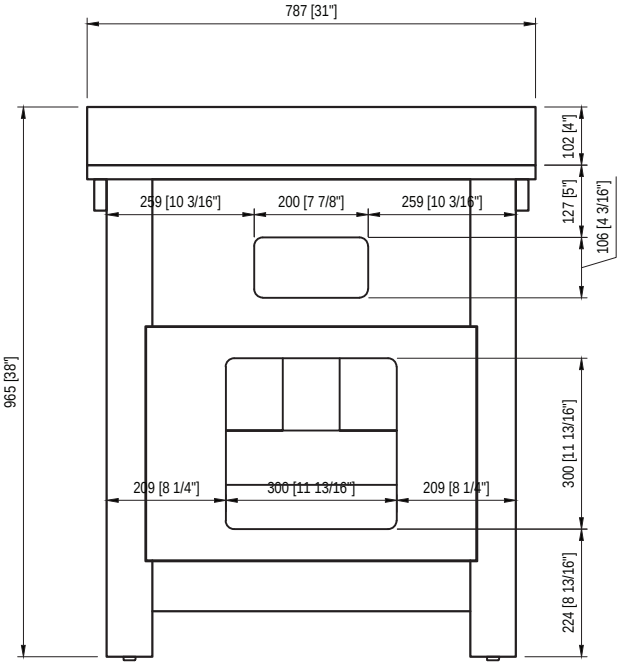

BACK VIEW

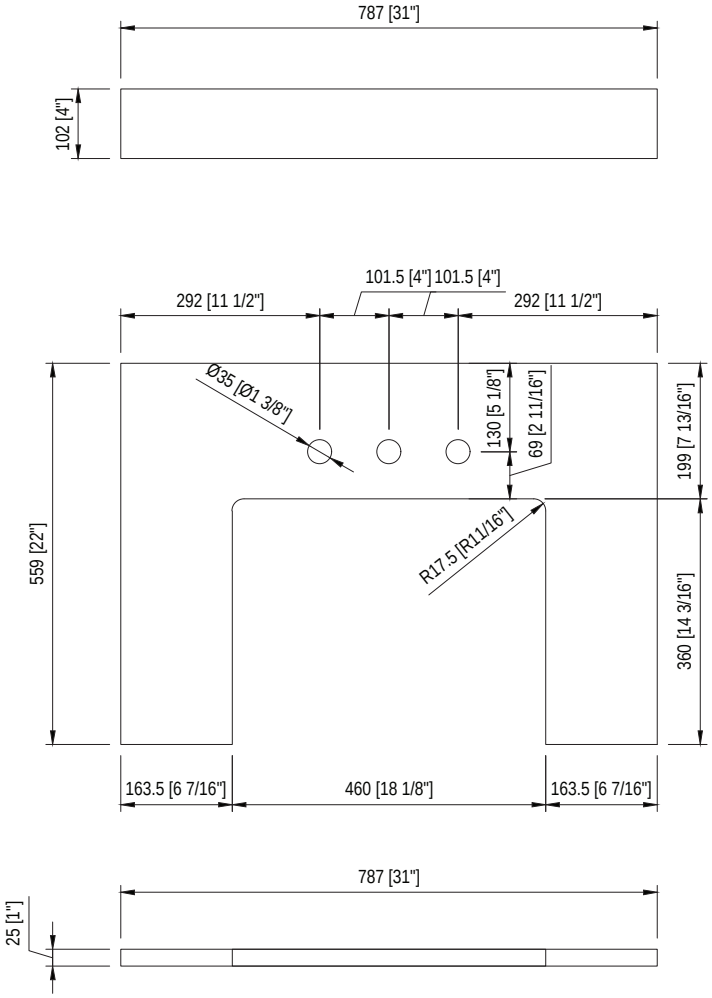
787 [31"]
102 [4"]
101.5 [4"]
101.5 [4"]
292 [11 1/2"]
292 [11 1/2"]
Ø35 [Ø1 3/8"]
130 [5 1/8"]
69 [2 11/16"]
199 [7 13/16"]
559 [22"]
R17.5 [R11/16"]
360 [14 3/16"]
163.5 [6 7/16"]
460 [18 1/8"]
163.5 [6 7/16"]
787 [31"]
25 [1"]

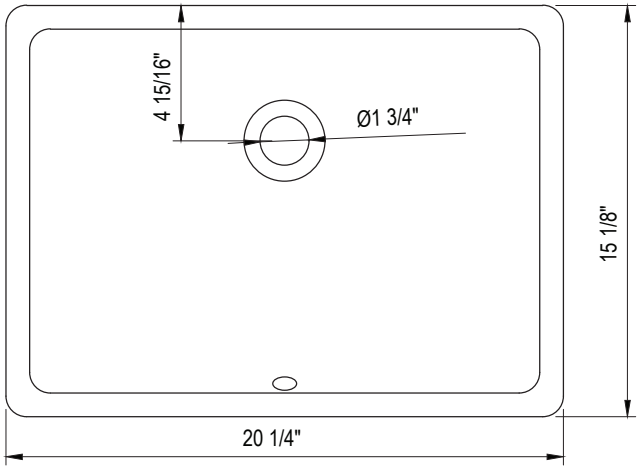
4 15/16"
Ø1 3/4"
15 1/8"
20 1/4"

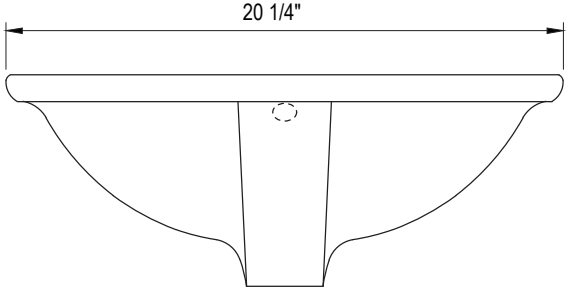
20 1/4"

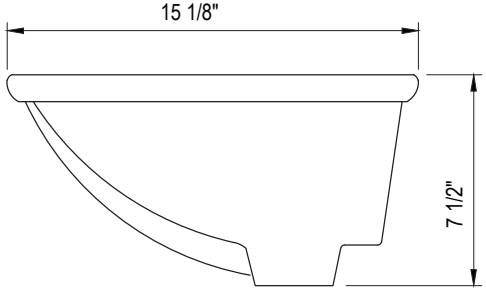
15 1/8"
7 1/2"

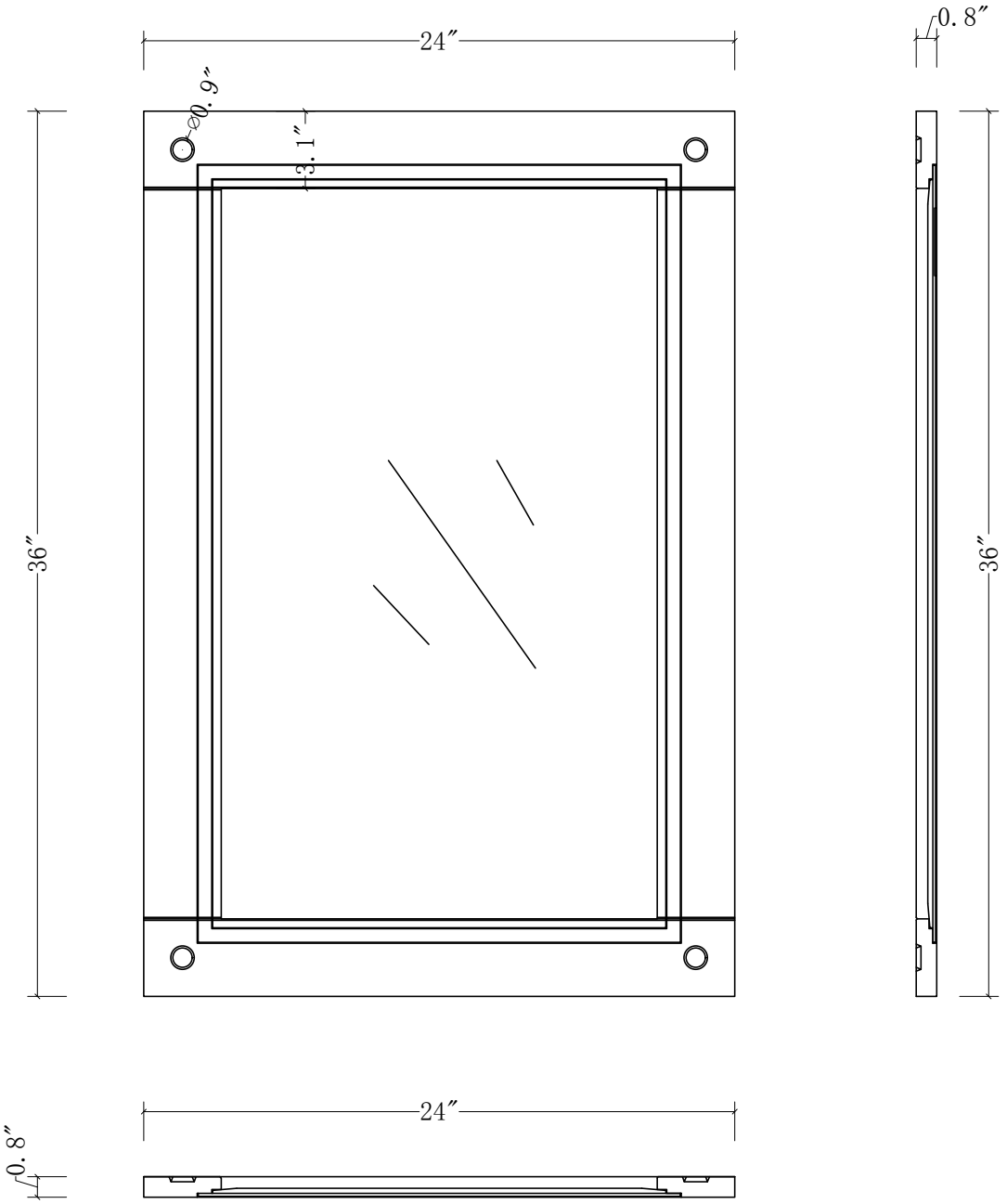
24″
0.8″
⌀0.9″
3.1″
36″
36″
24″
0.8″

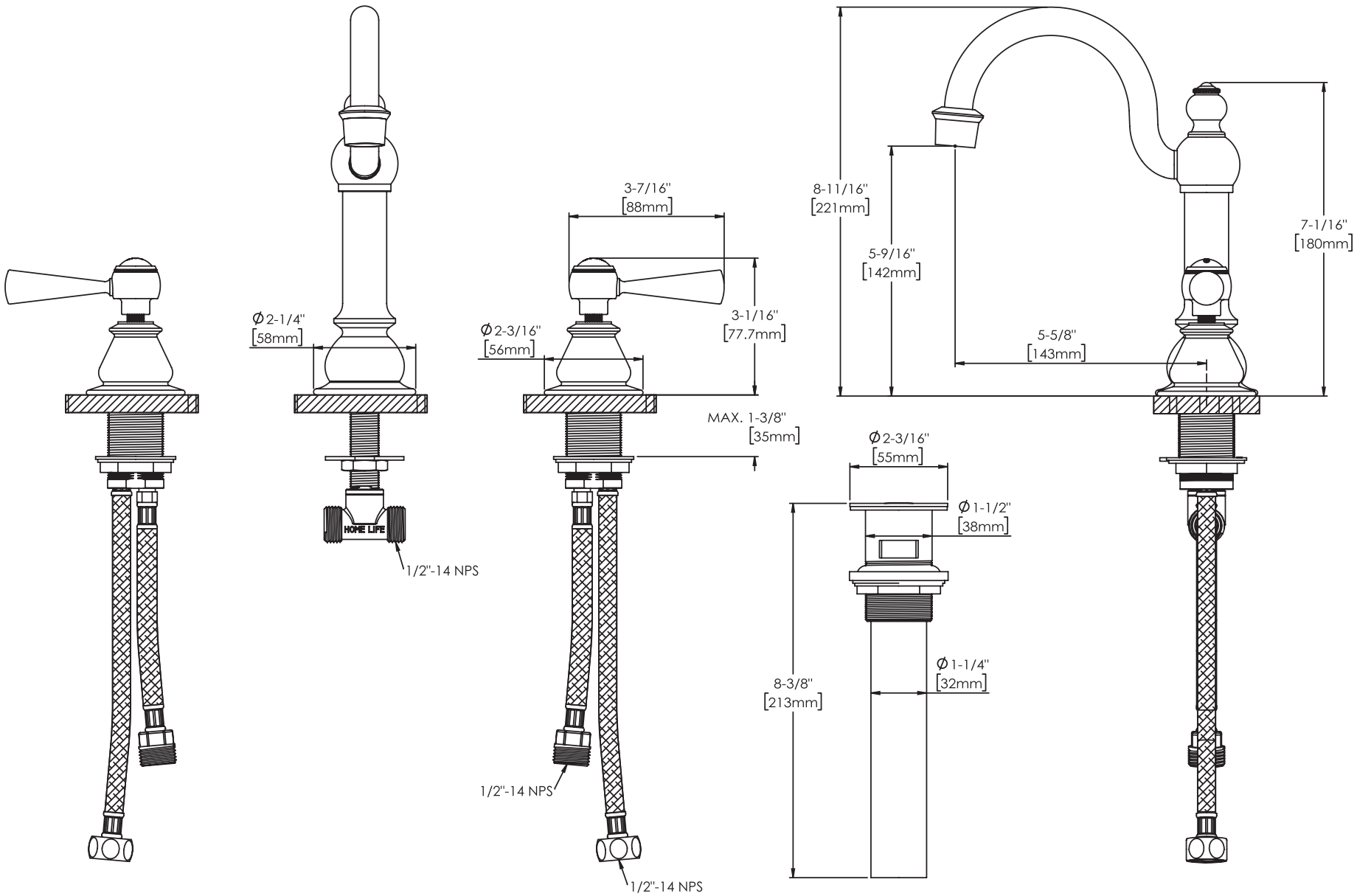
Ø2-1/4"
[58mm]
HOME LIFE
1/2"-14 NPS
3-7/16"
[88mm]
Ø2-3/16"
[56mm]
3-1/16"
[77.7mm]
MAX. 1-3/8"
[35mm]
1/2"-14 NPS
1/2"-14 NPS
8-11/16"
[221mm]
5-9/16"
[142mm]
5-5/8"
[143mm]
7-1/16"
[180mm]
Ø2-3/16"
[55mm]
Ø1-1/2"
[38mm]
Ø1-1/4"
[32mm]
8-3/8"
[213mm]

2024-12-19