ASSEMBLY INSTRUCTIONS

Patio Seating Set 3PCS

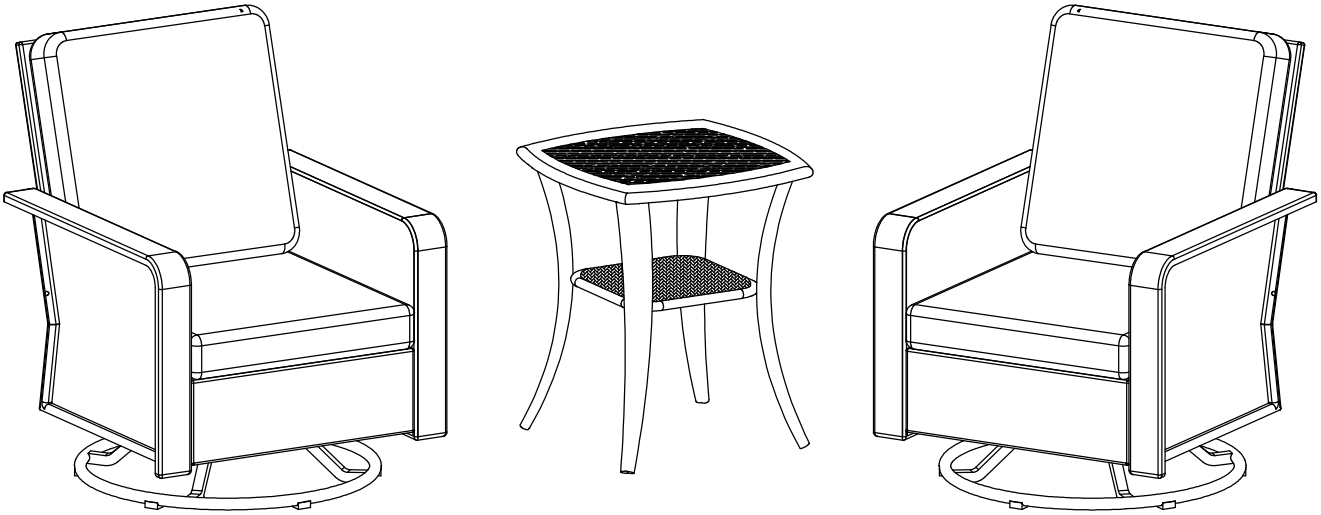

Notice：

1.Follow the installation instructions. Please confirm all accessories are preset before installation.

2.Do not fully tighten the screws during initial assembly.Fully tighten screws only once all pieces which are correctly assembled.

3.If you encounter any problems during installation, please contact our customer service.

WARRANTYINFORMATION

- Do not expose the surfaces to direct sunlight or to extreme environmental conditions.

- Clean the surfaces preferable with a clean damp cloth, then dry with a clean towel.

- Do not use solvents or abrasive materialsto clean the unit. If you decide to use a cleaning agent,test first on an area hidden from view.

- Replacement parts might be available to you at no charge, with an original proof of purchase and where a defect has arisen, wholly or substantially, as a result of faulty manufacturing, parts or workmanship during the Warranty Period.

- The warranty does not ex tend to regular wear and tear,nor the manufacturer assumes liability for damages or consequences due to accidents. incorrect assembly, negligence,improper use modifications, or not heeding the above warnings.

- Thank you so much for your support! We hope you enjoy your purchase. If there is any damage or missing accessories,please feel free to contact us for free replacement or refund. You can find us through the order number page and we will do our best to solve the problem for you.

The cushion needs to be restored to 90% within 24 hours after unpacking and to 100% after 48 hours.

Thank you !

Assembly Instruction

(Single Swivel Chair)

SC-A	SC-B	SC-C	SC-D	SC-E	SC-F	SC-G	S	S1	S2	N	N1	W	H	O
						Cushion	M6*35	M6*40	M6*45	M6	Self-locking nut M6			
1PC	1PC	1PC	1PC	1PC	1PC	1PC	10PCS	4PCS	4PCS	4PCS	4PCS	26PCS	1PC	1PC

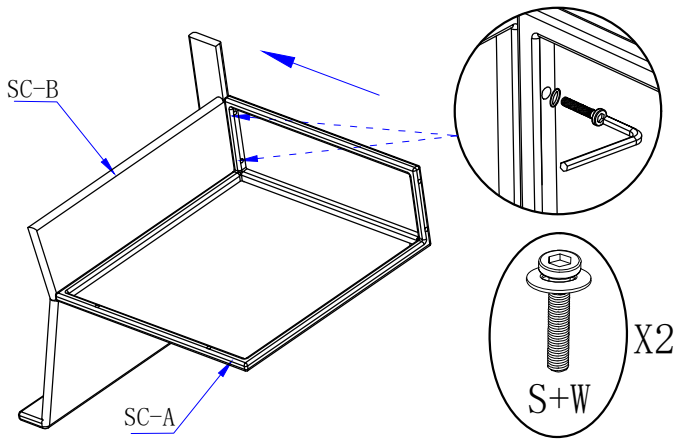

STEP 1

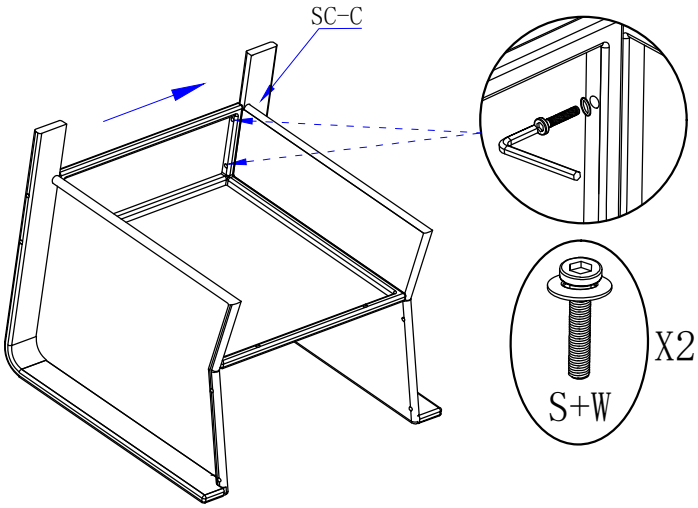

STEP 2

Do not fully tighten the screws during initial assembly.
Fully tighten screws only once all pieces which are correctly assembled.

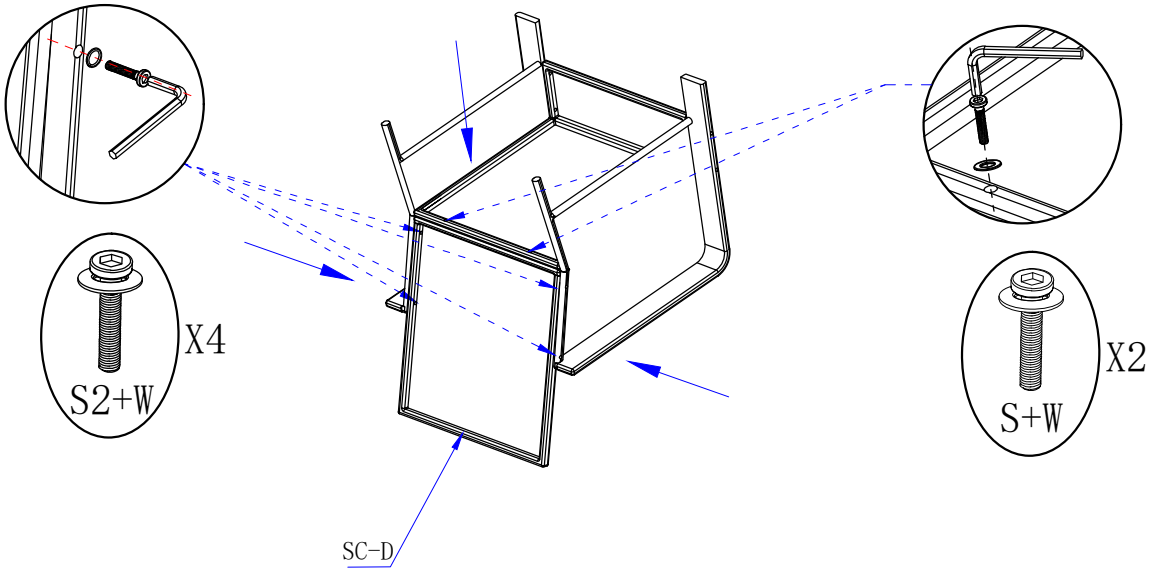

STEP 3

Assembly Instruction

(Single Swivel Chair)

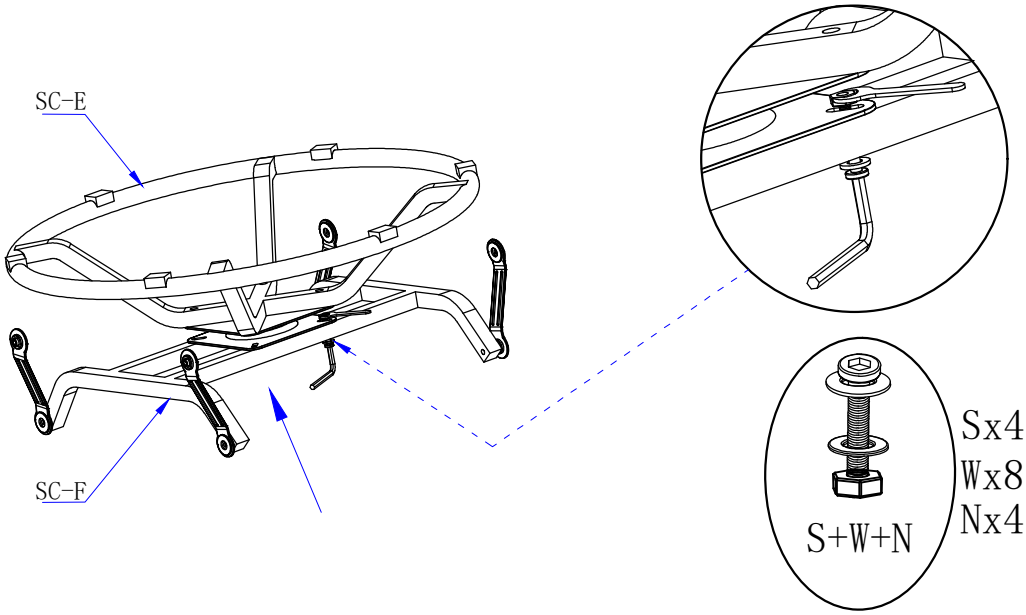

STEP 4

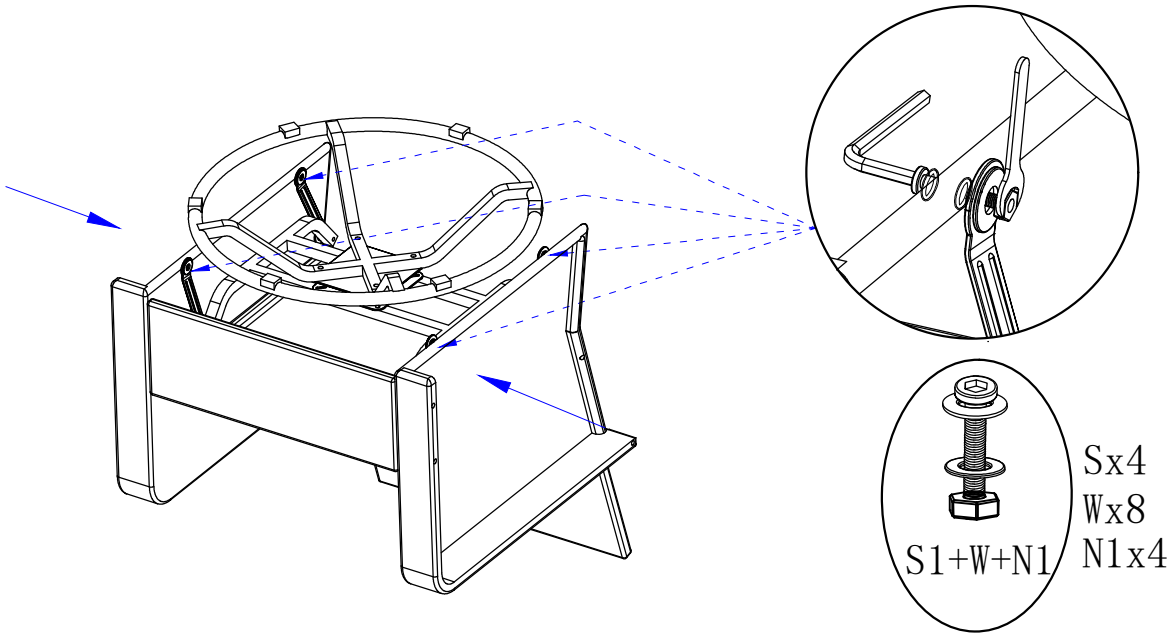

STEP 5

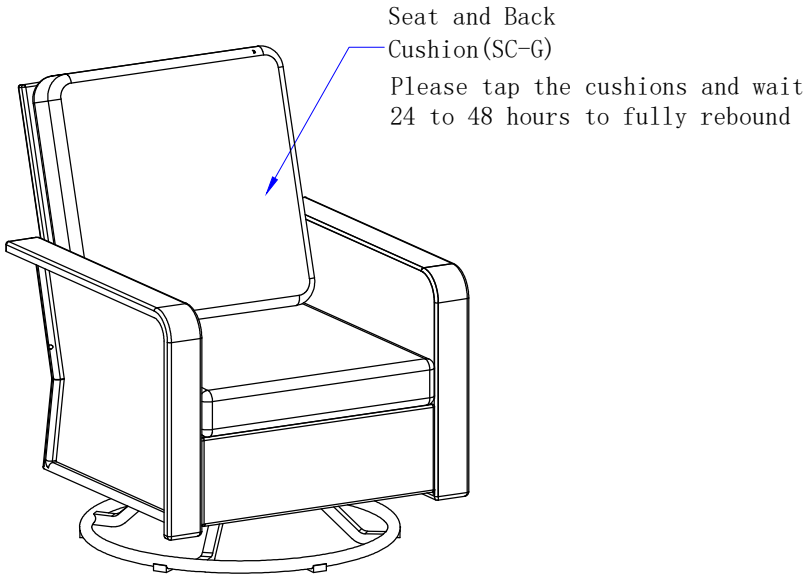

FINISH

Assembly Instruction

(Side Table)

A	B	C	S3	W	H
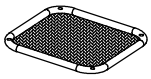		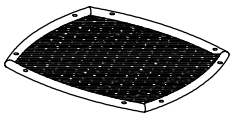	M6*16		
1PC	2PCS	2PCS	12PCS	12PCS	1PC

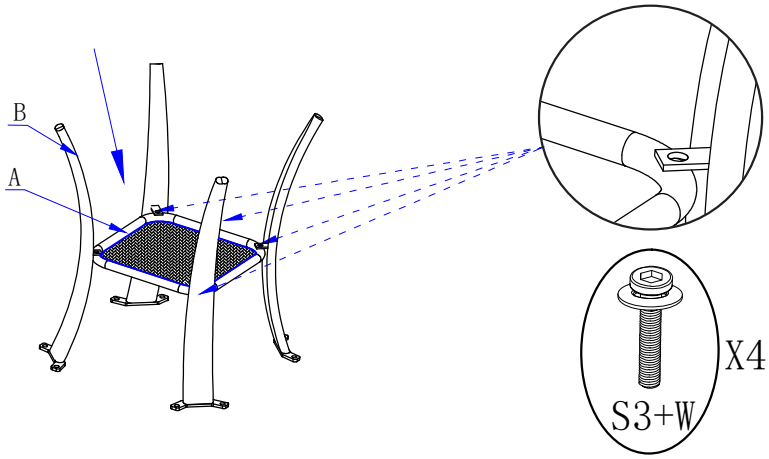

STEP 1

Do not fully tighten the screws during initial assembly.
Fully tighten screws only once all pieces which are correctly assembled.

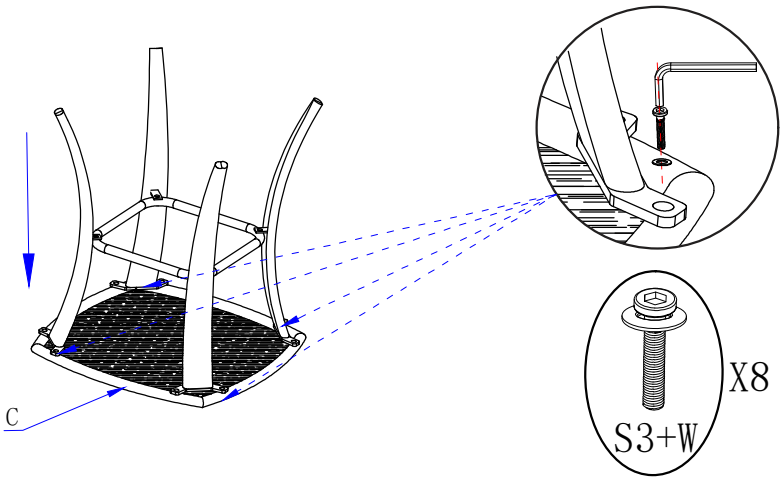

STEP 2

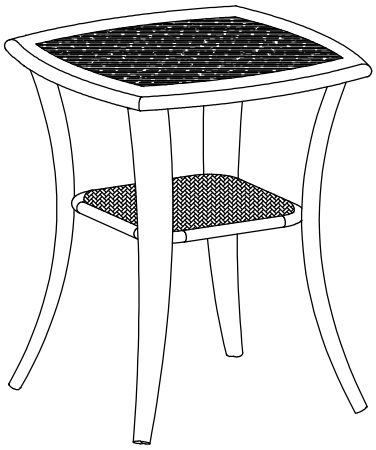

FINISH

Assembly Instruction

（Foot pedal and coffee table）

Single Swivel Chair	Side Table
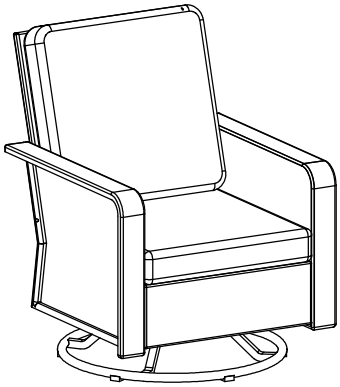	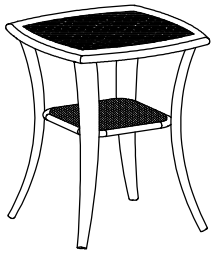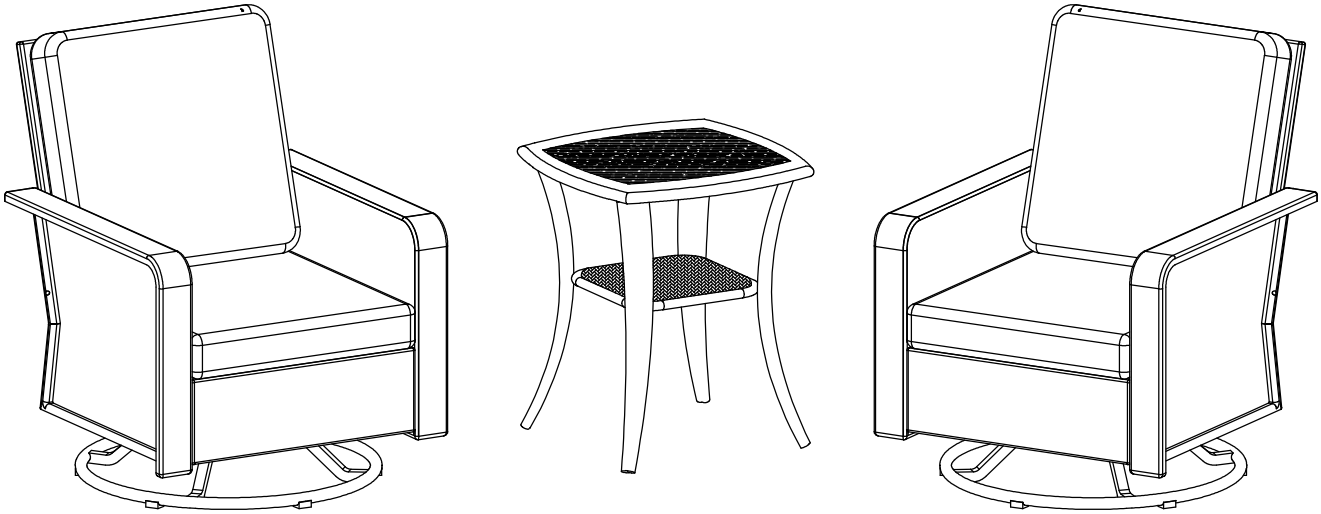
2PCS	1PC