IK304805 PART LIST

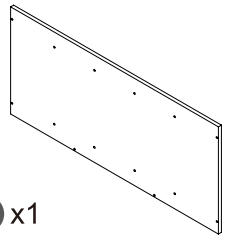

A x1

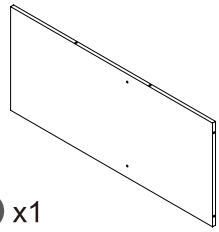

B x1

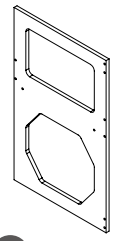

C x1

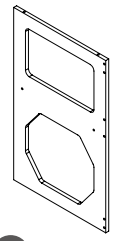

D x1

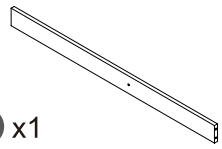

E x1

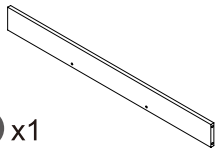

F x1

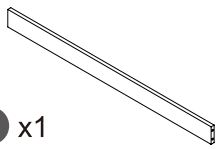

G x1

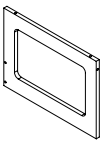

H x1

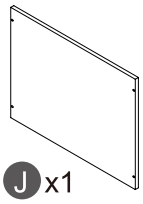

J x1

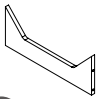

K x1



L x4

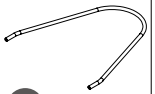

M x4

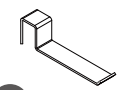

N x2



P x4+1



Q x8+1



R x8+1



S x35+2

⚠ ***Please pay attention to hole direction of each board.***

Step 1

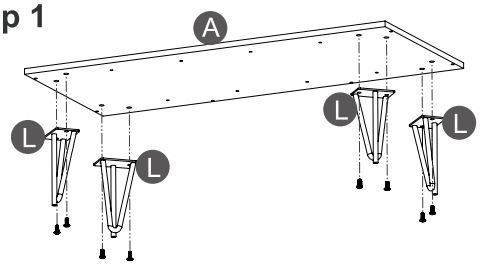



Q×8

Step 2

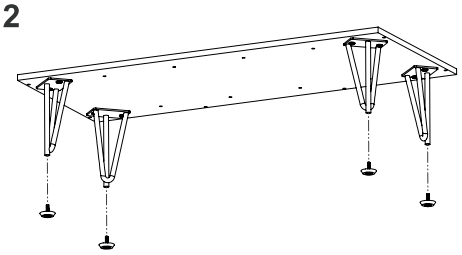



P×4

Step 3

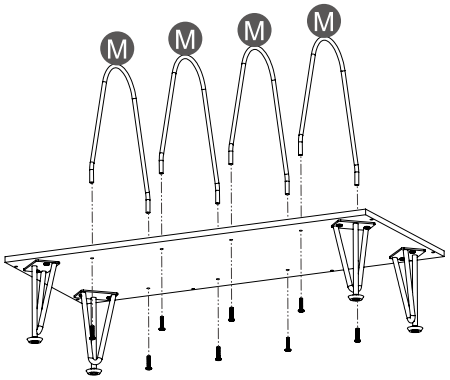



R×8

Step 4

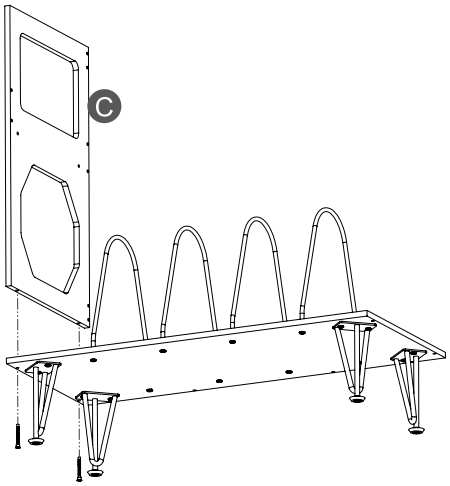



S×2

Step 5

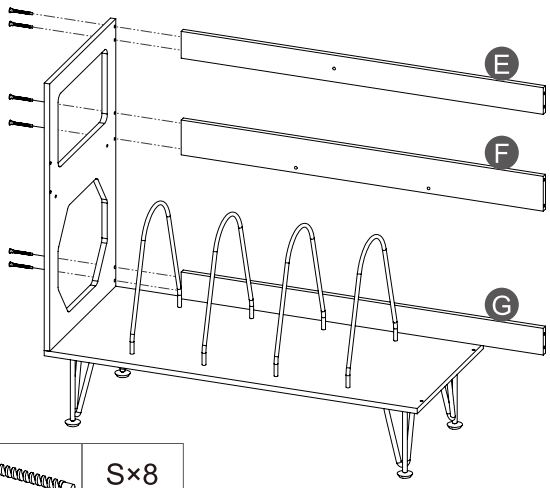



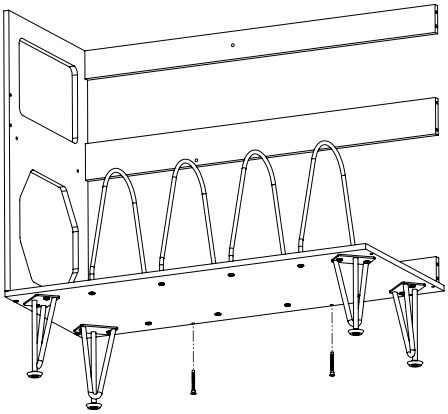

S×8

Step 6

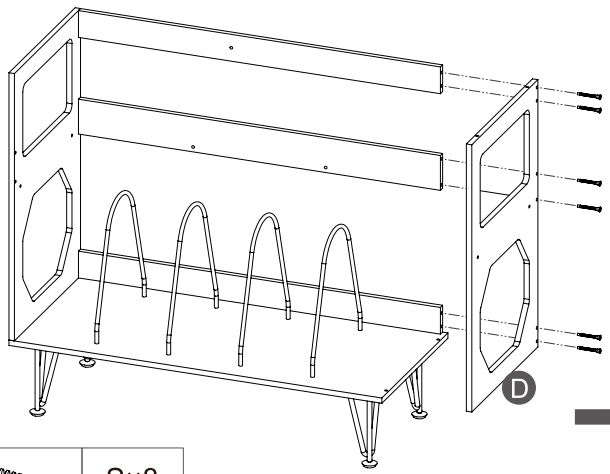

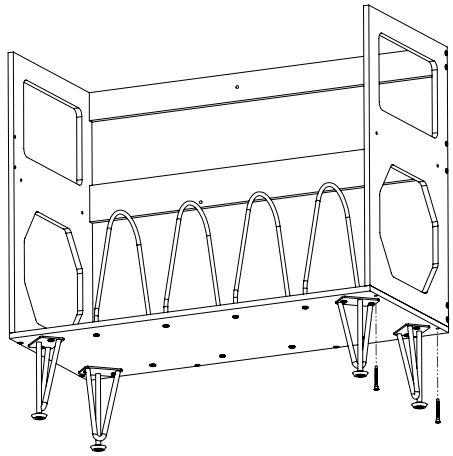



S×8

⚠ ***Please pay attention to hole direction of each board.***

Step 7

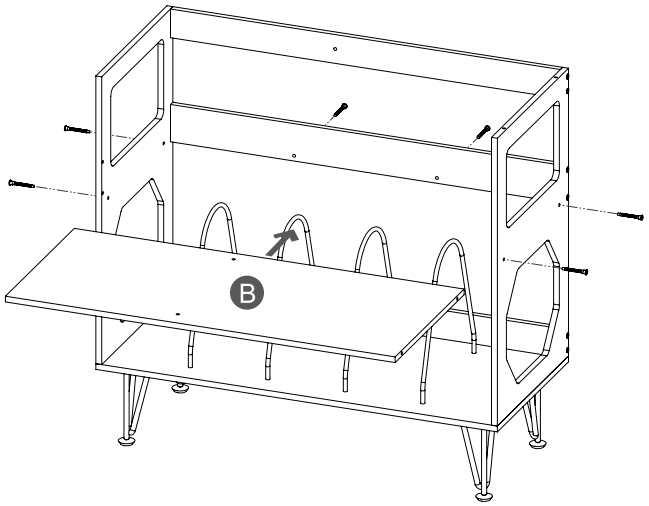

S×6

Step 8

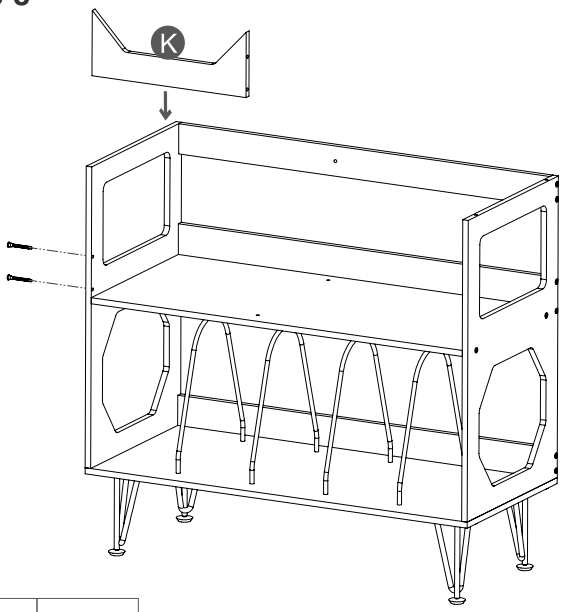

S×2

Step 9

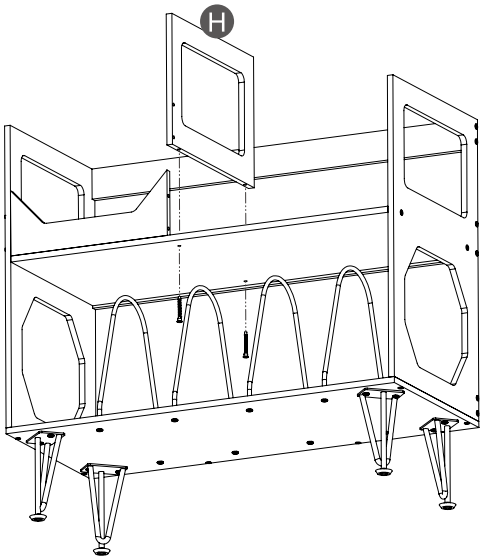

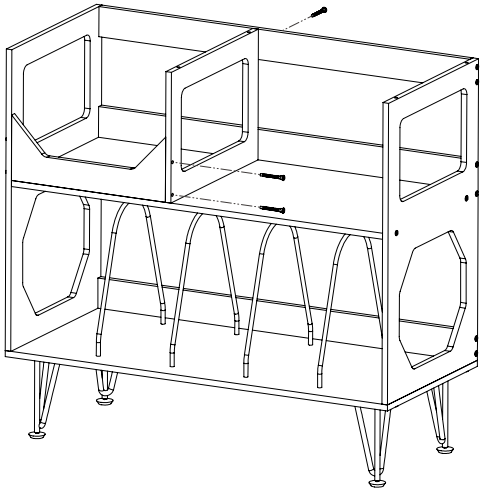

S×5

Step 10

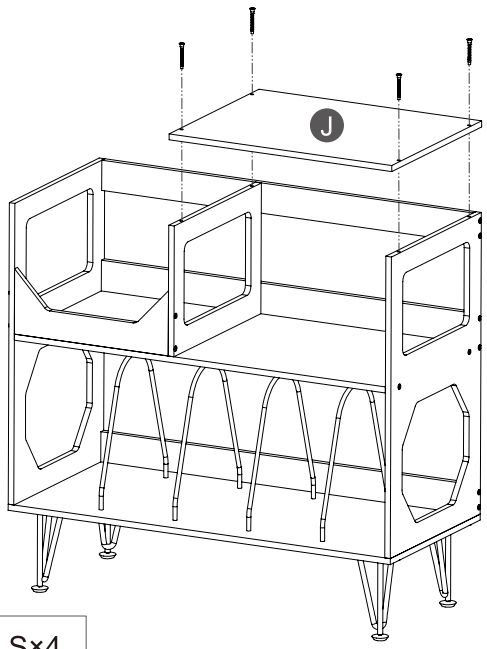

S×4

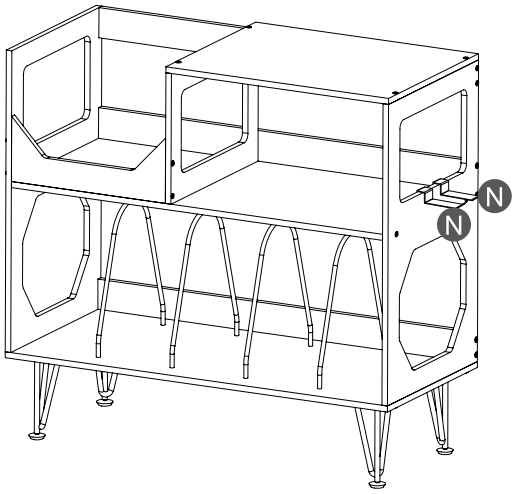

COMPLETION