The ceiling

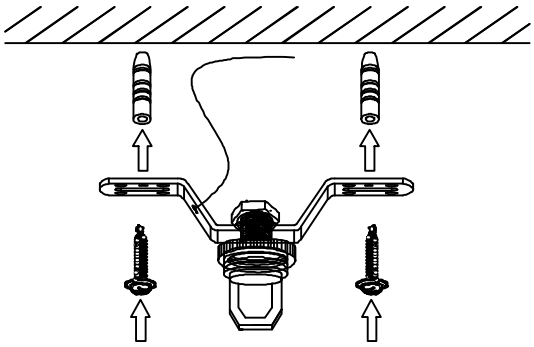

1 Step1 :Measure and determine the hole positions of the hanging plate on the ceiling by using the hole positions on the hanging plate.

2 Step2 : Punch holes in the positioning mark according to the size of the expansion screw, then hammer the expansion screw into the hole with a hammer (leaving one centimeter outside) and then counter clockwise unscrew the nut and meson to lock the hanging plate. (If your ceiling is not concrete but a wooden suspended ceiling,use self-tapping screws directly to secure the cross-hanging panels).

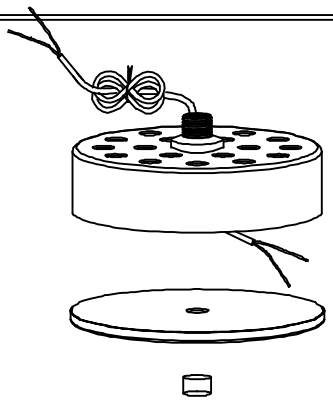

3 Step3 : As shown in the figure 3 thread the main wire through the lamp holder.

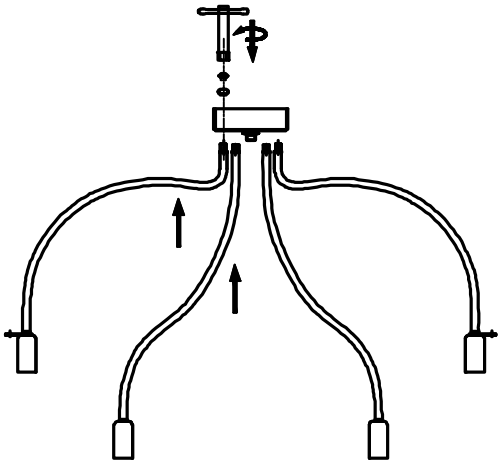

4 Step4 : As shown in the figure 4, install the lamp arm from the inside out onto the lamp holder.

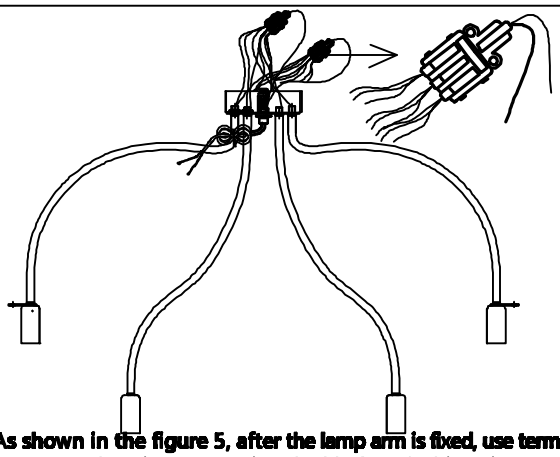

5 Step5 : As shown in the figure 5, after the lamp arm is fixed, use terminal blocks to connect the wires, separating the black and white wires. Insert every three branch wires into one terminal hole, and connect them to the main wire according to the color using terminal blocks.

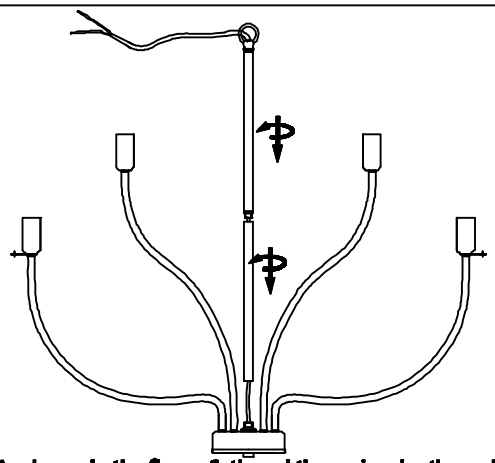

6 Step6 : As shown in the figure 6, thread the main wire through the round tube. Connect the two round tubes, and then tighten them onto the lamp holder.

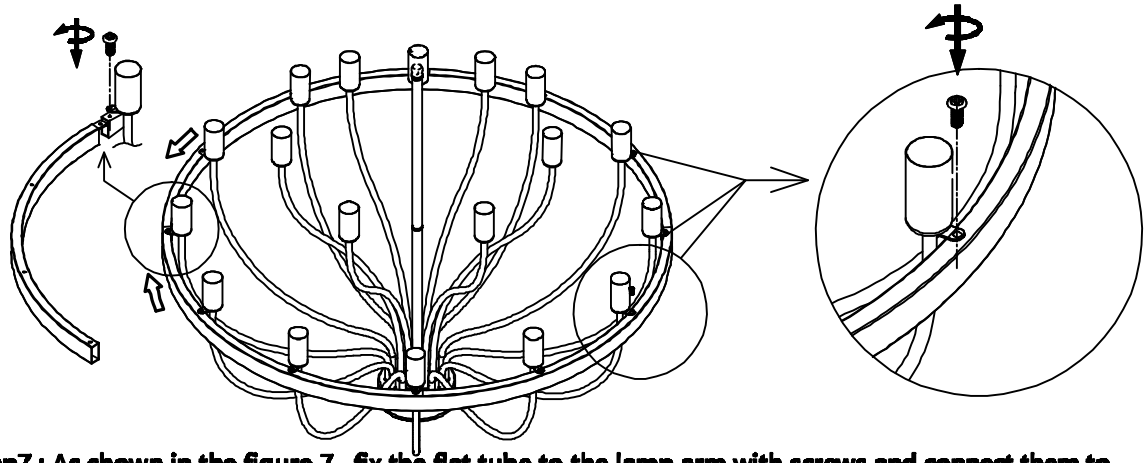

7 Step7 : As shown in the figure 7, fix the flat tube to the lamp arm with screws and connect them to form a circle.

The ceiling

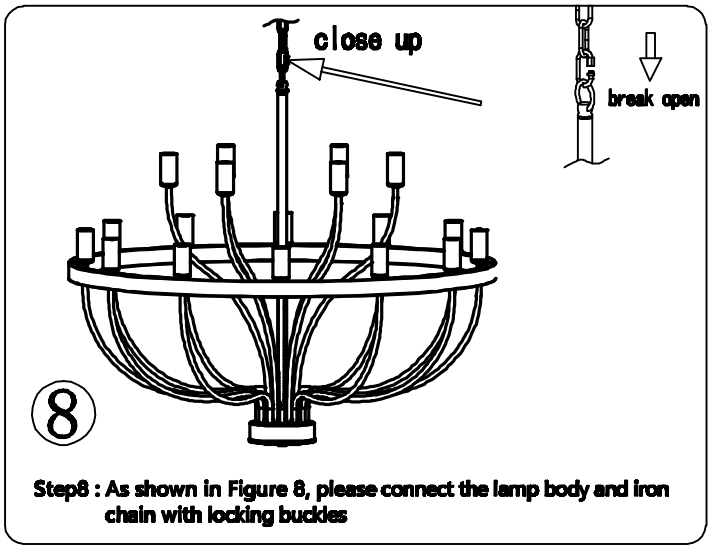

Step8 : As shown in Figure 8, please connect the lamp body and iron chain with locking buckles

Step9 :As shown in Figure 9, please connect the lamp body and the ceiling panel with locking buckles

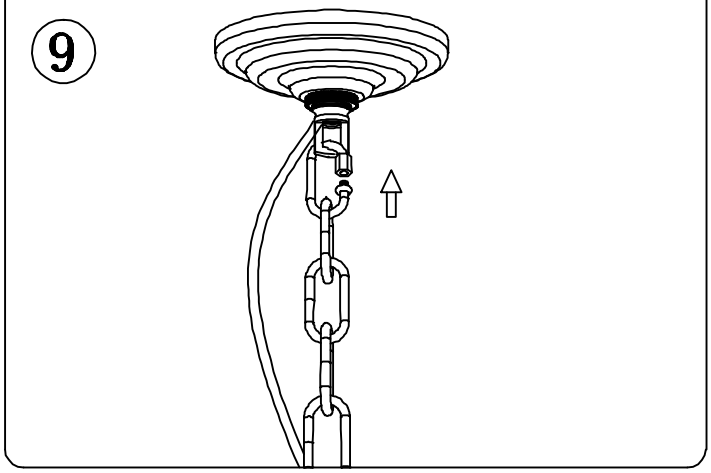

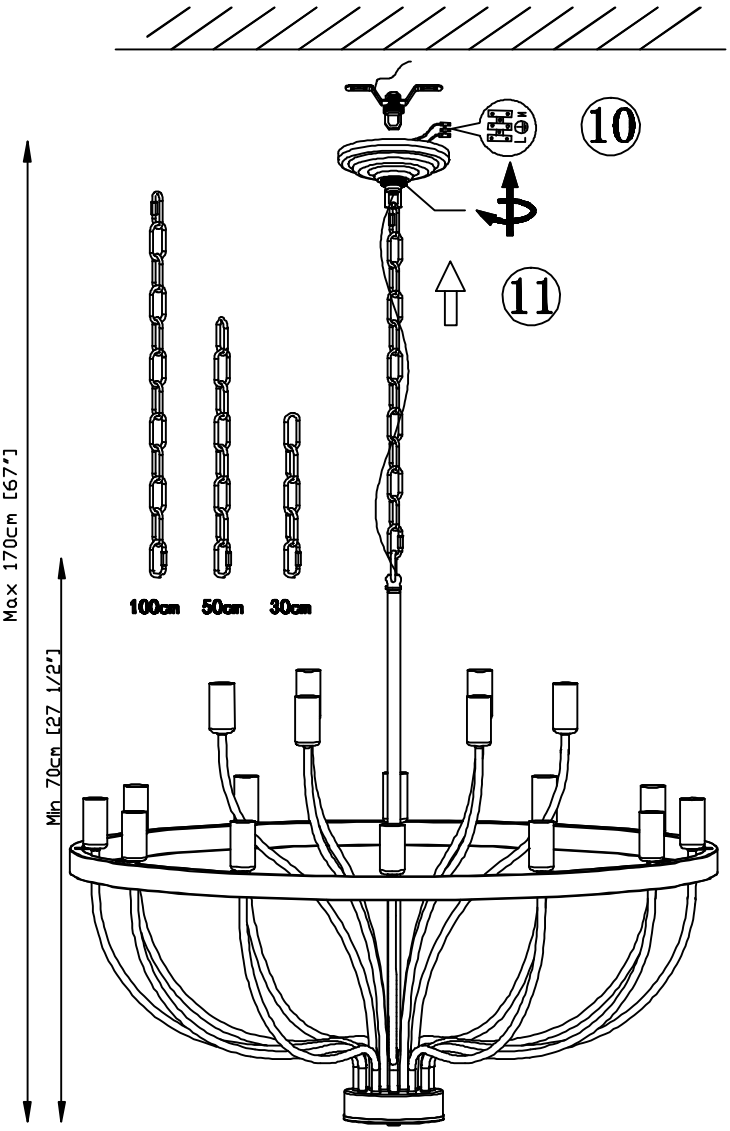

Step10 :Connect the ground wire properly and switch on the 110V power supply. Check the main wire of the lamp body to see if the lamp can work properly. It is recommended that a professional electrician install this lamp.

Step11 :Finally, use a circular ring to fix the ceiling-mounted plate firmly on the hanging plate.

part list :

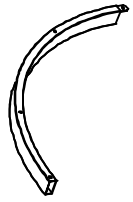
4pcs

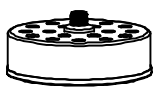
1pcs

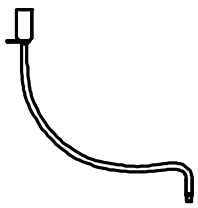
12pcs


6pcs

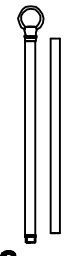
2pcs

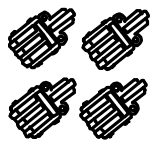
4pcs

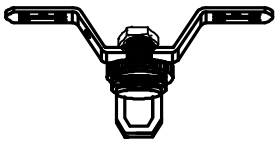
1pcs

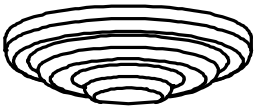
1pcs


15pcs

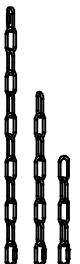
3pcs

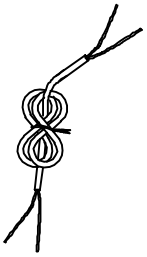
1pcs

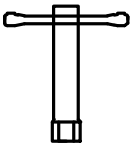
1pcs