LS4220,1,2,3,4,5,8XL,XLAB
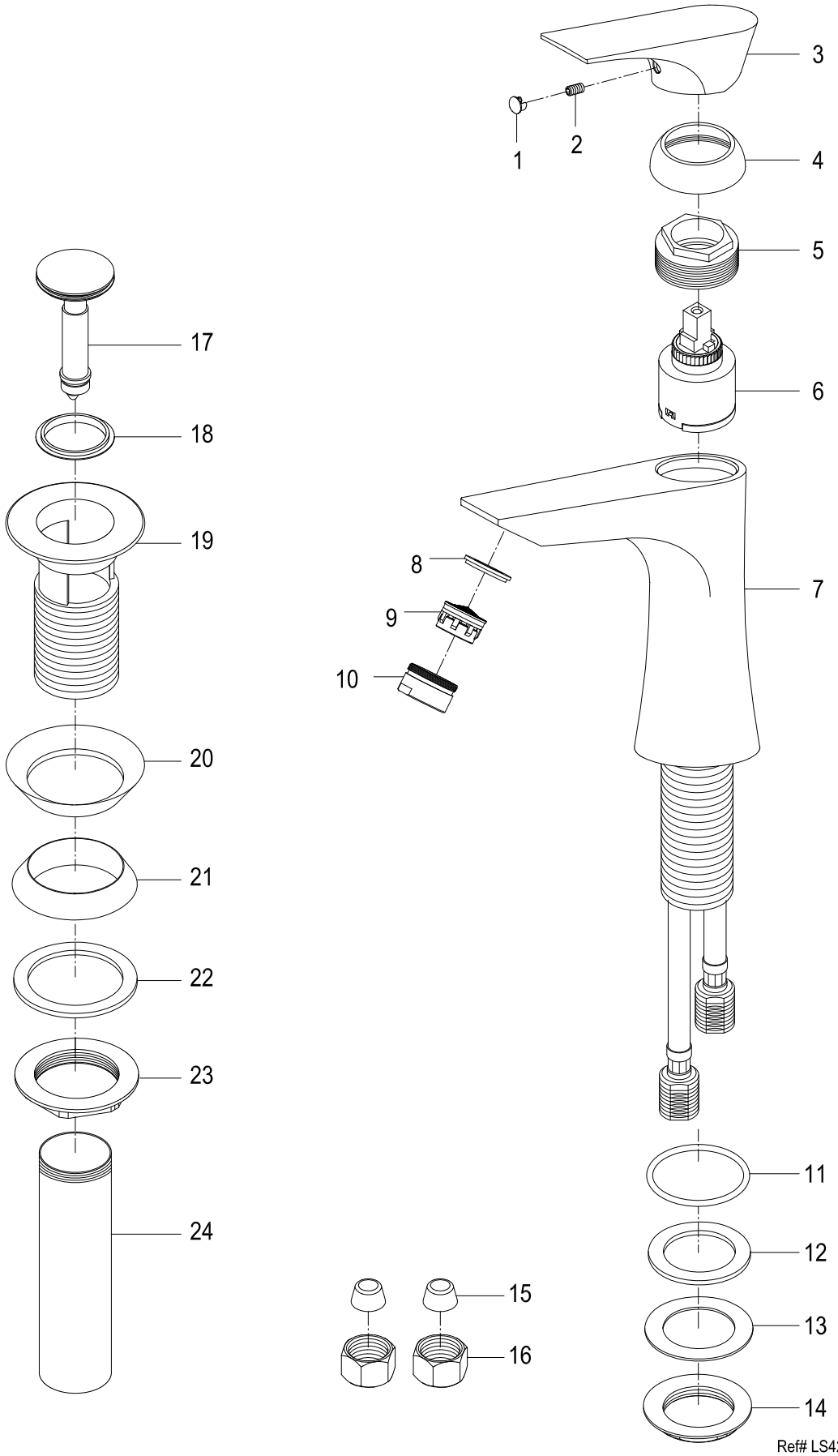
Single Handle Lavatory Faucet With Push-Up Pop-Up