ASSEMBLY INSTRUCTIONS

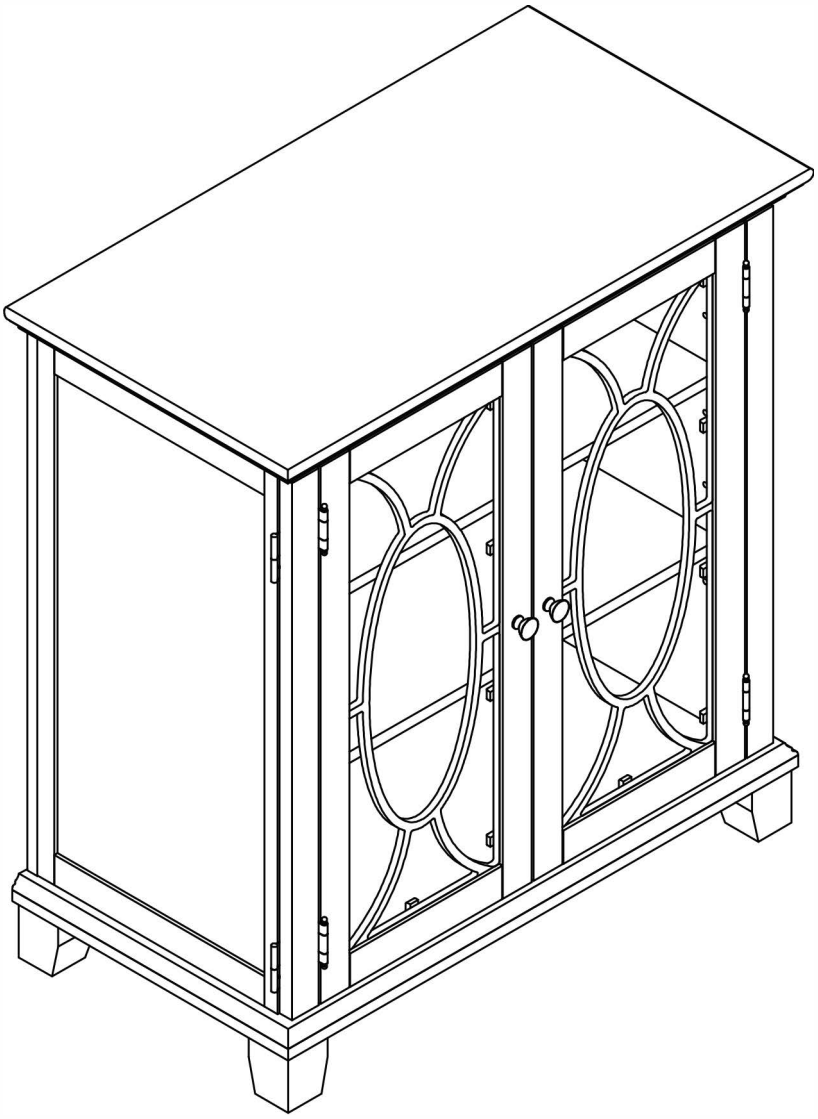

TOOLS REQUIRED

Allen Wrench

(Included)

Phillips Screwdriver

(Not Included)

2 - Persons Recommended

ASSEMBLY RATING

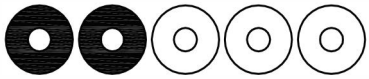

EASY ⟶ DIFFICULT

The Assembly Rating is a 5-point system showing the level of effort needed to assemble a specific product.

CHECK BEFORE STARTING

Are you missing anything?

Double-check all parts, hardware and accessories listed on Page 6 are accounted for.

Should we send any replacements?

Are there any irregularities or flaws in the parts? We can send replacements!

Check out our Quick Tips!

We recommend reviewing the pre-assembly handouts. Even experts need a refresher now and then!

Prep Time!

Please review the assembly instructions and all diagrams prior to assembling. Set up your workspace by laying the parts and hardware out separately, then begin!

PRE ASSEMBLY INTRODUCTION

We understand building ready-to-assemble furniture can be a challenging experience for some. To help avoid confusion, we have provided some helpful tips that may speed up the process.

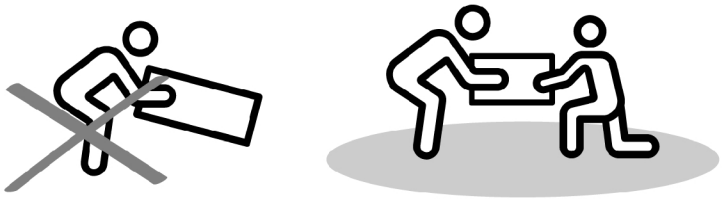

Teamwork

ALWAYS have at least two people to help with transporting and assembling the product to avoid potential injury and/or damage.

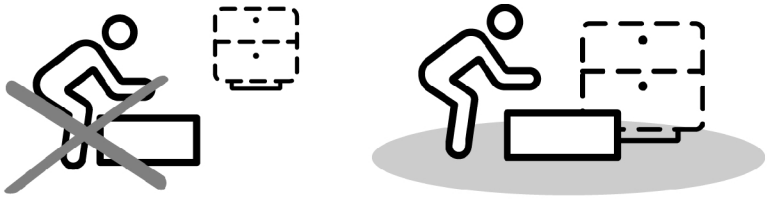

Suitable Location

Assembling near the area of the intended location is highly recommended.

Sufficient Space

Make sure you have enough space to move around during the assembly.

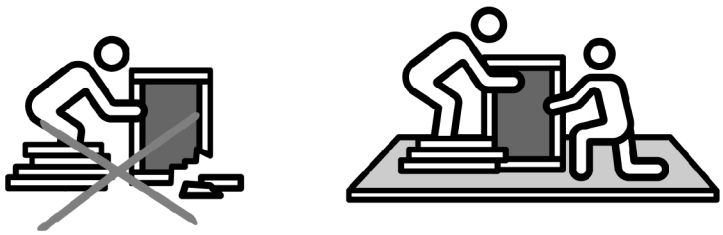

Avoid Scratches

Use cardboard, blankets or a carpeted area while assembling furniture to prevent scratches.

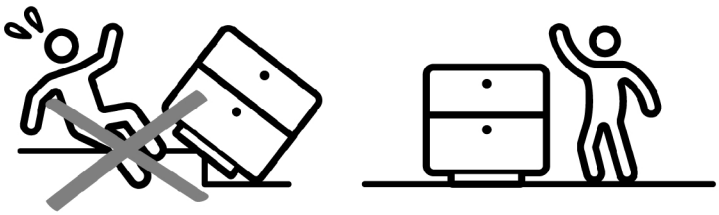

Flat Surface

Make sure the furniture rests on a flat and level surface with each leg evenly touching the floor.

ASSEMBLY AND CARE ADVICE

FAILURE TO FOLLOW THE GUIDELINES BELOW MAY RESULT IN INJURY AND/OR PROPERTY DAMAGE.

Position each part correctly and insert screws or bolts into their respective holes.

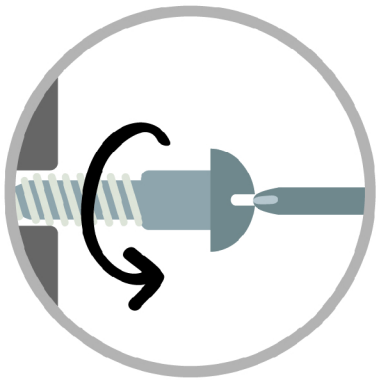

Turn clockwise to tighten and only tighten when step is completed or when instructed to do so.

Use the appropriate hand tools or power tools for assembly. Select steps, such as tightening screws and/or bolts, may require hand tools to avoid causing damage during assembly.

Save the instructions and store any supplied tools for later maintenance.

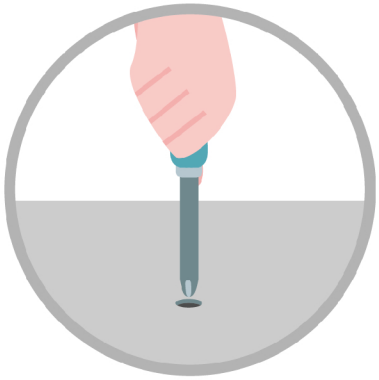

After two weeks, check and tighten any loose hardware and repeat again every six months thereafter.

IT IS THE USER'S RESPONSIBILITY TO MAINTAIN THE FURNITURE. THE HARDWARE MAY LOOSEN OVER TIME AND MAY CAUSE THE FURNITURE TO BE WOBBLY AND UNABLE TO SUPPORT ITS INTENDED WEIGHT CAPACITY. THIS MAY LEAD TO COLLAPSE AND MAY CAUSE SERIOUS INJURY.

KITCGEN ISLAND

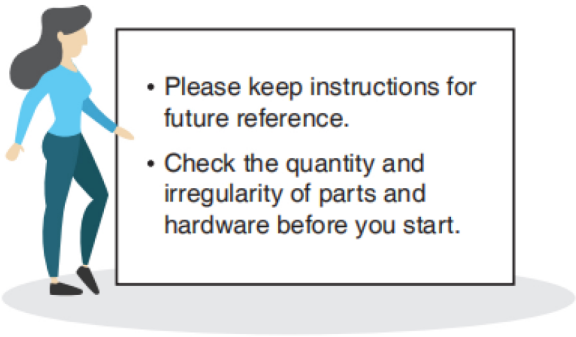

- Please keep instructions for future reference.
- Check the quantity and irregularity of parts and hardware before you start.

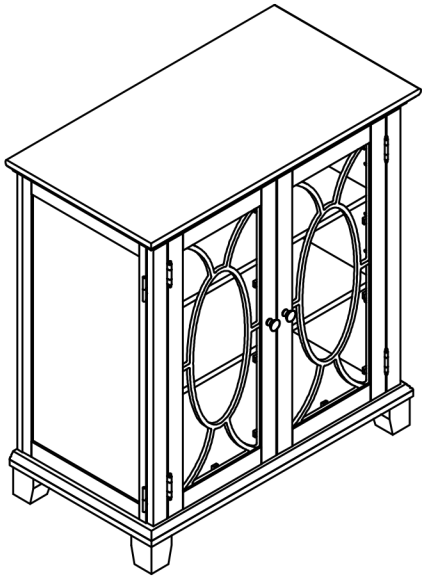

PARTS

#1 1pc

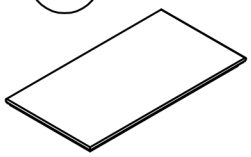

Top panel

#2 1pc

Left side panel

#3 1pc

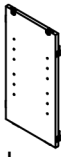

Right side panel

#4 1pc

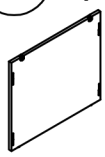

Back panel

#5 1pc

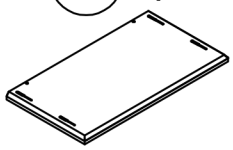

Bottom panel

#6 1pc

Left door

#7 1pc

Right door

#8 2pcs

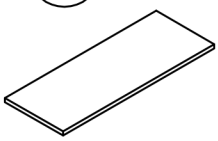

Adjustable shelf

#9 4pcs

Legs

HARDWARE

#A 2pcs

Knob

#B 2pcs

Handle screw
Ø5/32"*19mm

#C 8pcs

Shelf support
Ø6.5mm

#D 4pcs

Bolt
Ø1/4"*80mm

#E 4pcs

Spring Washer
Ø1/4"

#F 4pcs

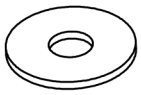

Flat washer
Ø1/4"

#G 1pc

Allen Wrench

#H 1Set

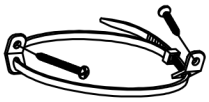

Anti tip kit

Exploded View

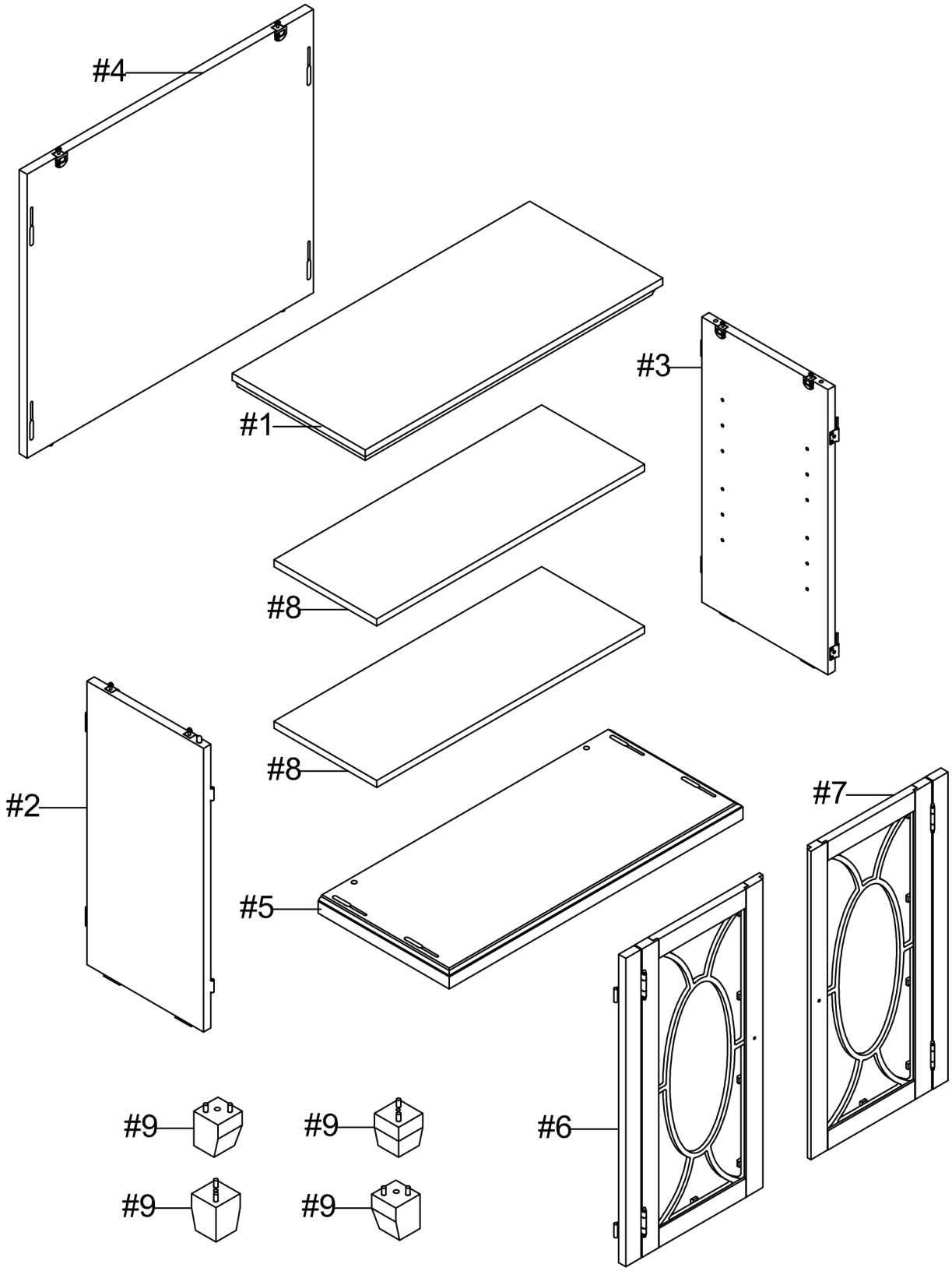

ASSEMBLY INSTRUCTIONS

1

Hardware (#D) x4pcs

Hardware (#E) x4pcs

Hardware (#F) x4pcs

Hardware (#G) x1pc

Part (#9) x4pcs

Part (#5) x1pc

Align legs (#9) to the bottom panel (#5), secure using bolts (#D),Spring Washer (#E) and Flat washer (#F). Then fully tighten them using Allen Key(#G).

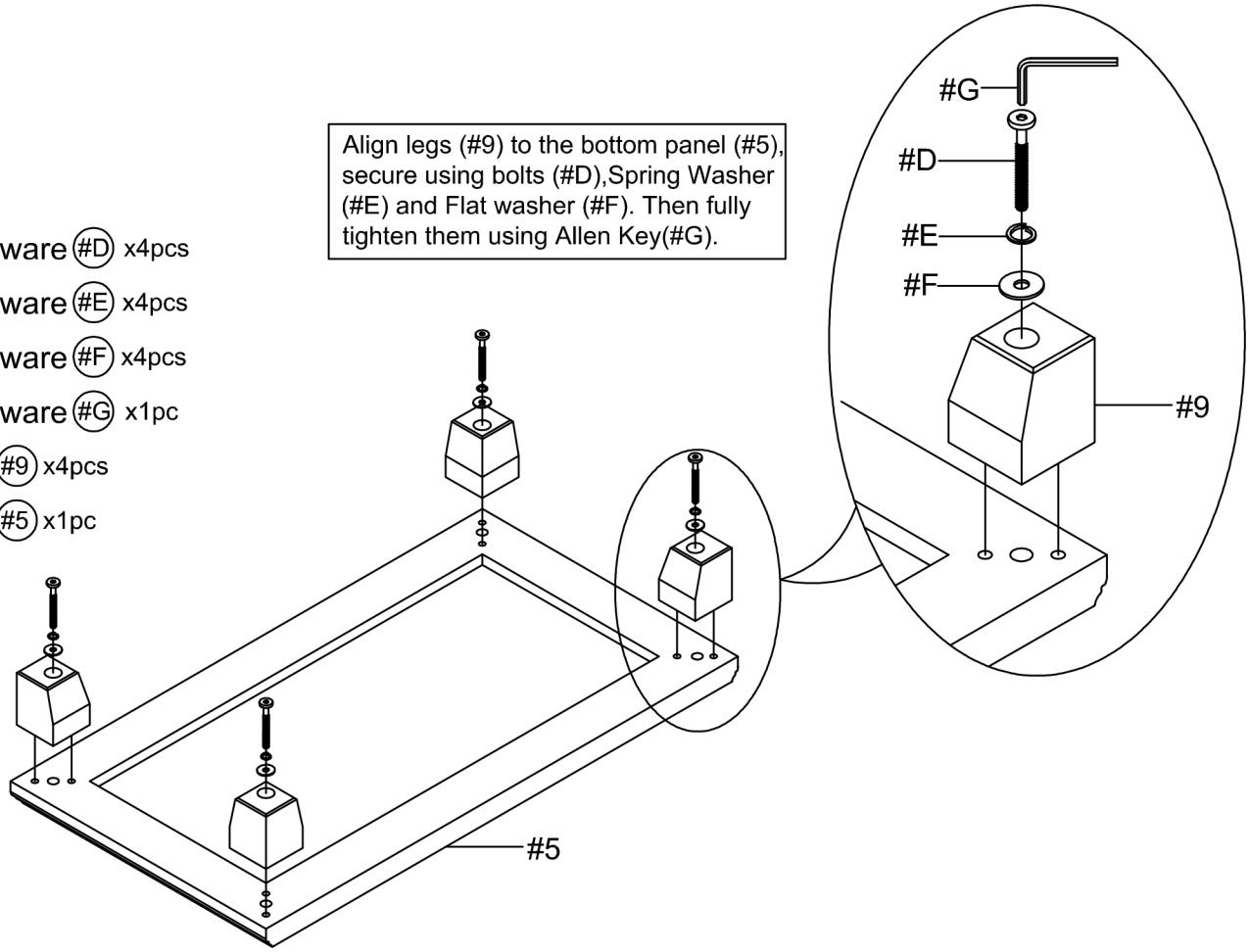

2

Part (#2) x1pc

Part (#3) x1pc

Part (#5) x1pc

Insert and slide side panels (#2,3) to the bottom panel (#5).

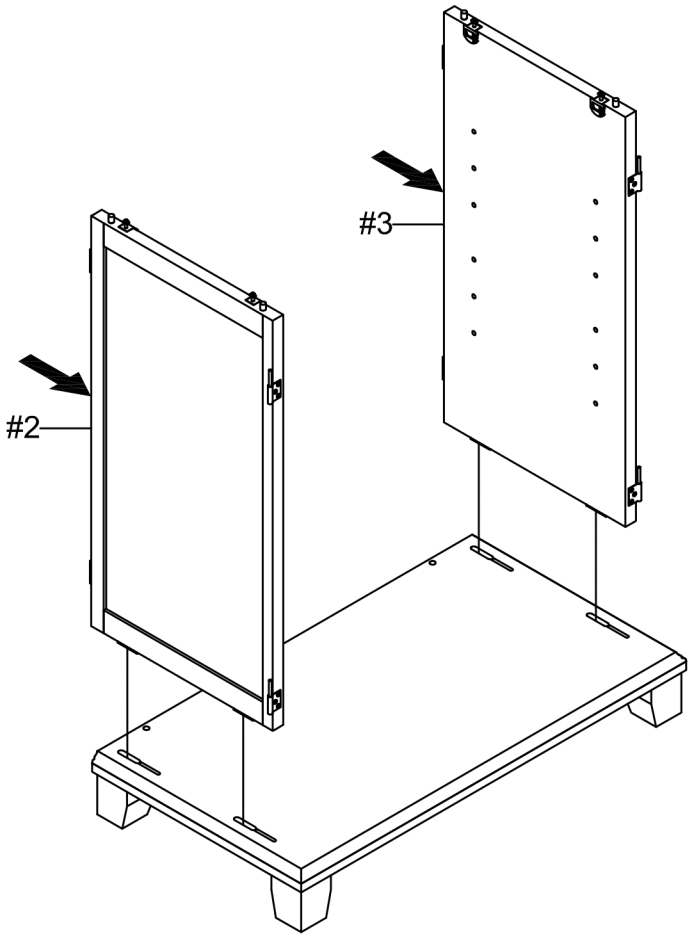

ASSEMBLY INSTRUCTIONS

3

Part (#4) x1pc

Insert and slide the back panel (#4) to the side panels.

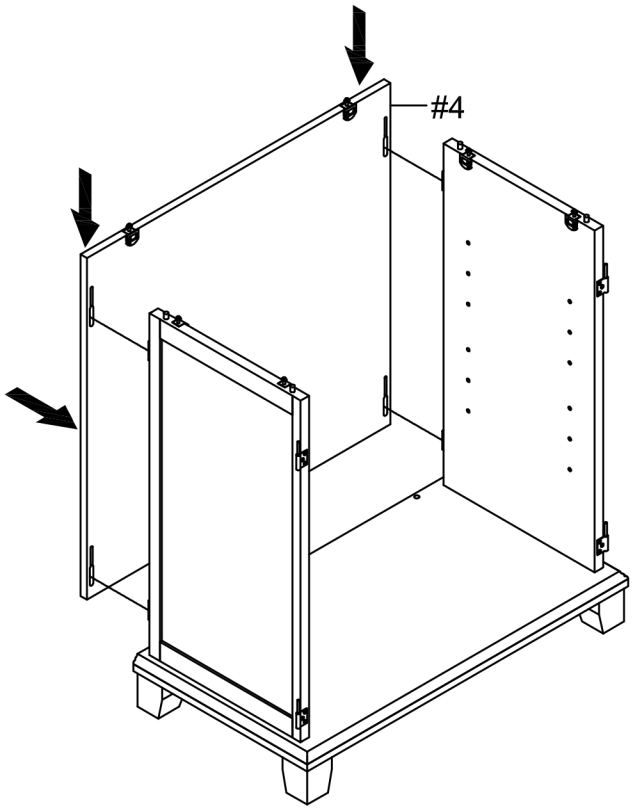

4

Hardware (#C) x8pcs

Part (#8) x2pcs

Insert shelf supports (#C) to the desired height of the shelf (#8), then place the shelf (#8) onto the shelf supports (#C).

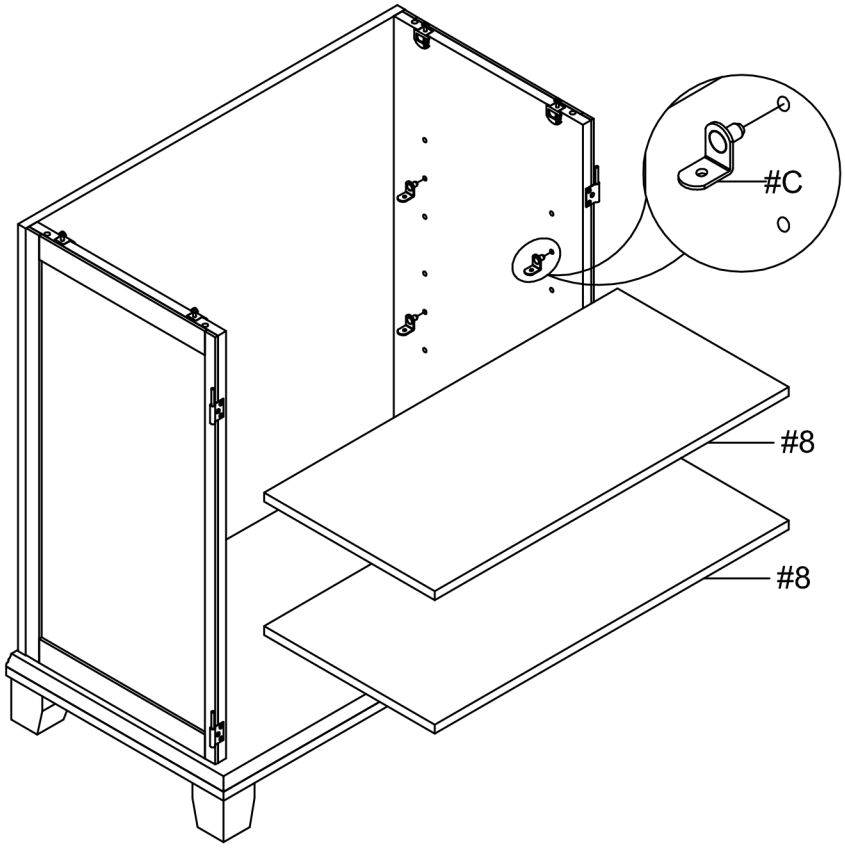

ASSEMBLY INSTRUCTIONS

5

Part #6 x1pc

Part #7 x1pc

Align and attach the shelf pins on the doors (#6,7) to the shelf pins on the side panels.

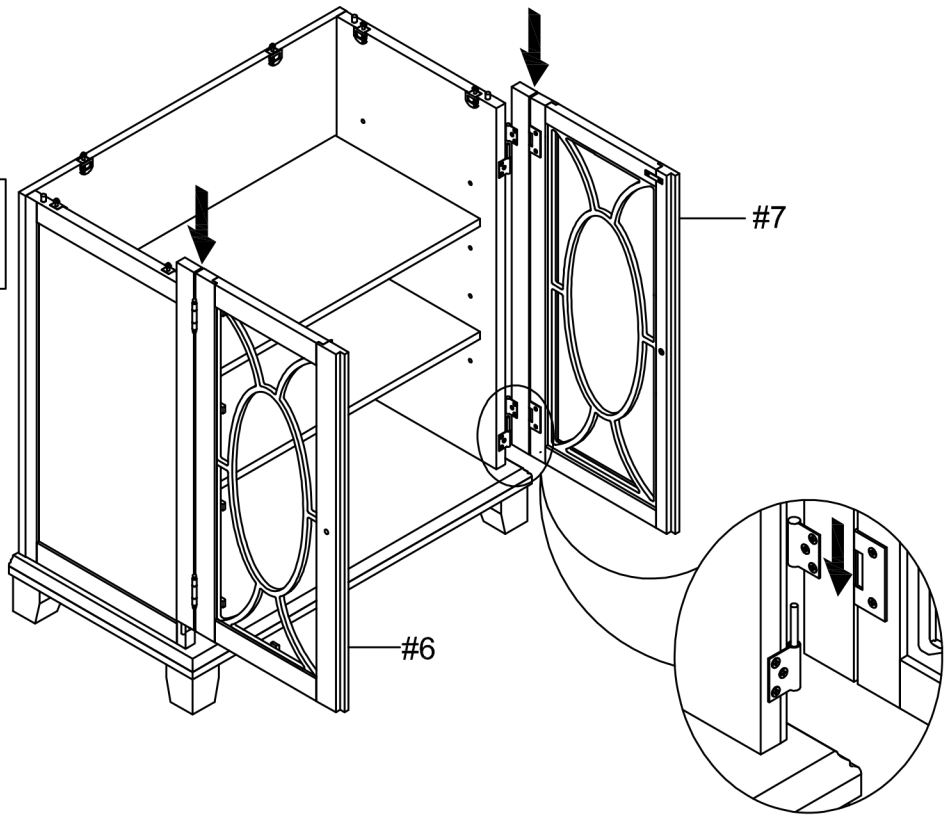

6

Part #1 x1pc

Please ensure that the lock is unlocked as shown in the diagram, then align the top panel (#1) to the pins. Secure by locking the pins to the top panel (#1).

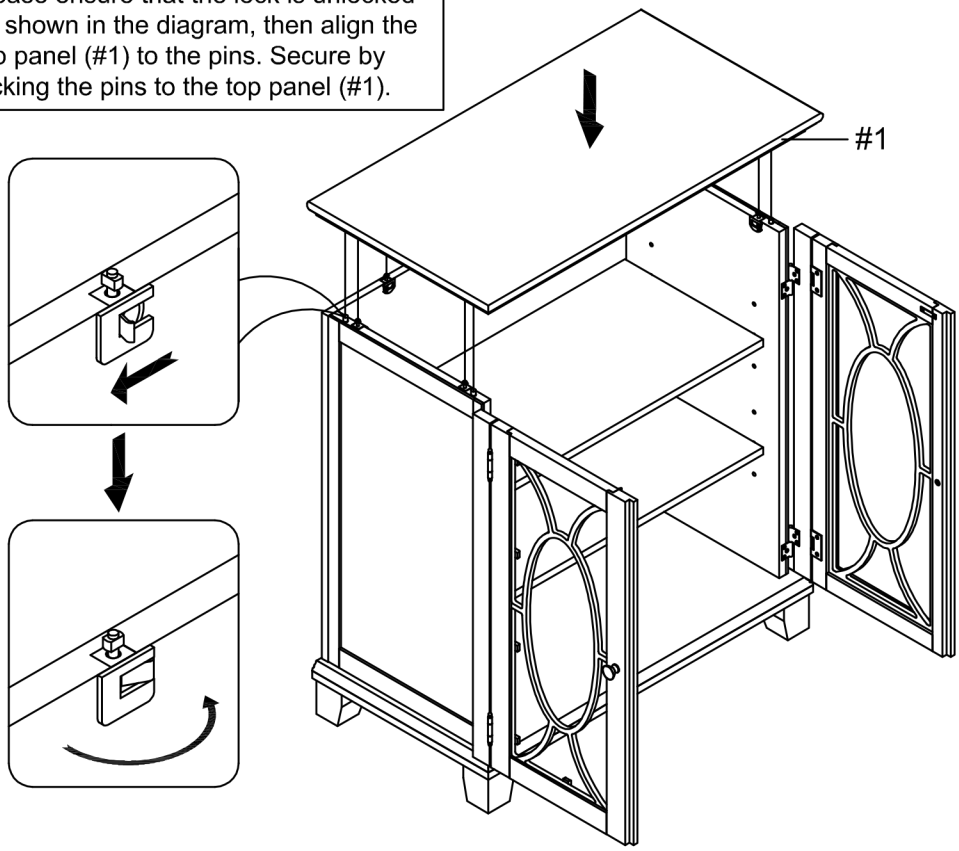

ASSEMBLY INSTRUCTIONS

7

Hardware (#A) x2pcs

Hardware (#B) x2pcs

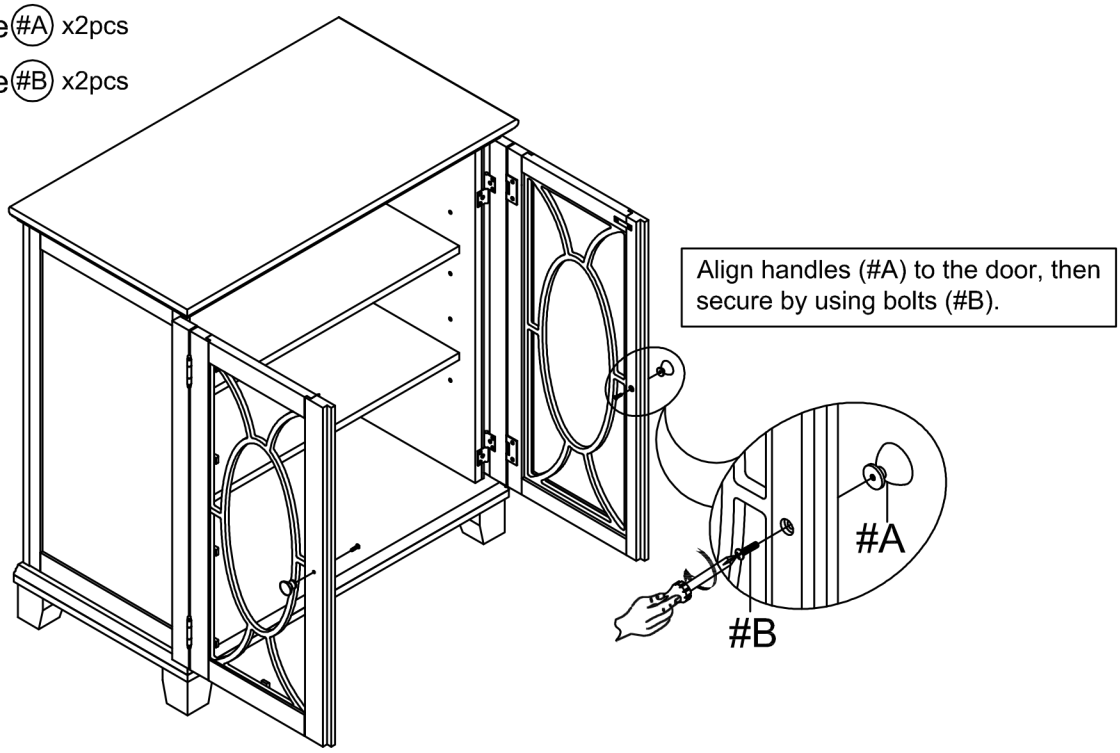

8

Hardware (#H) x1Set

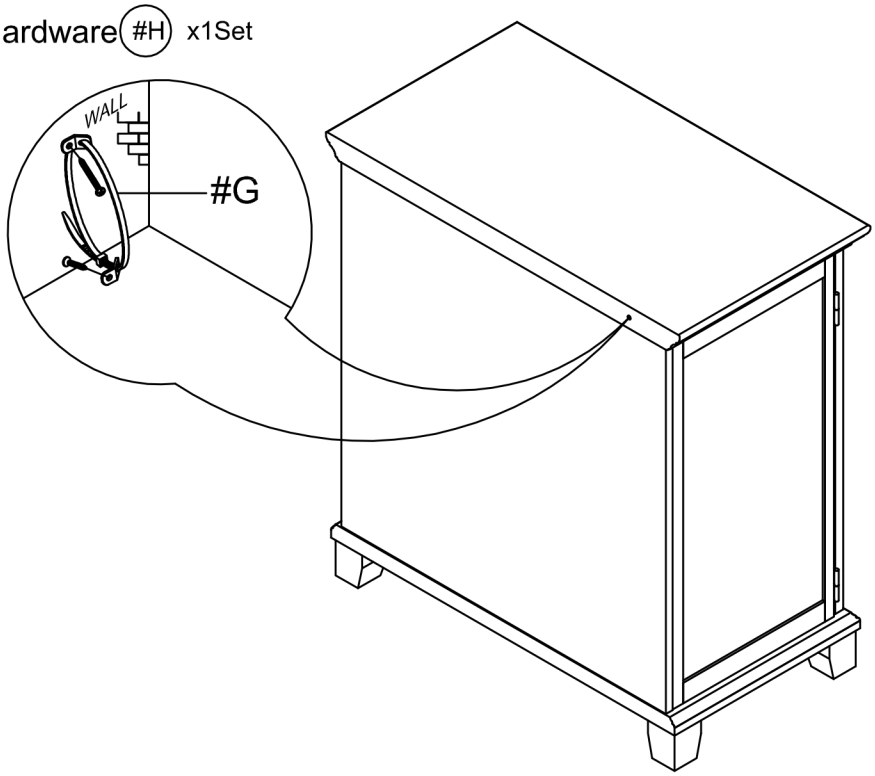

ASSEMBLY COMPLETED

Please ensure the furniture rests on an even and flat surface. If the product wobbles or feels loose, double-check all bolts and/or screws are properly tightened and secured.

Keep this handy!

Please retain this instruction manual and any order-related information for future reference.

Lift, don't drag!

To avoid damage to product please always LIFT the product when transporting of adjusting the placement.

ASSEMBLY INSTRUCTIONS

Wall Mounting and Fixing

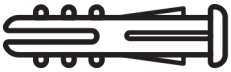

EXPANSION WALL ANCHOR

Our provided expansion wall anchors are only suitable for masonry walls, such as drywall, plaster or concrete, and are best for holding lightweight items or for anti-tip prevention. If you are unsure of the correct wall anchor to use with the product, please request professional guidance. liability for product damage or failure due to using the incorrect anchors will fall on the installer.

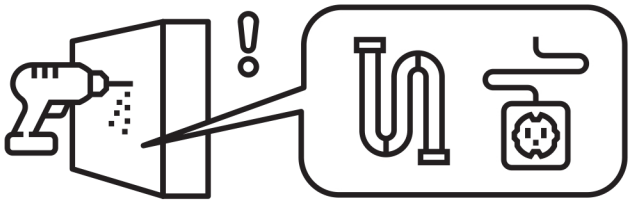

CHECK BEFORE PROCEEDING

Prior to drilling or hammering, please check for wires or pipes. We recommend using a stud finder to locate a stud, which will offer more appropriate resistance and hold more weight.

QUICK TIPS

1.If unsure of the proper size, always choose a larger screw and wall anchor.

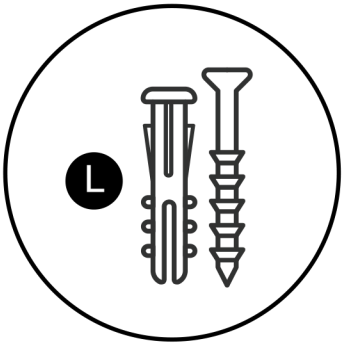

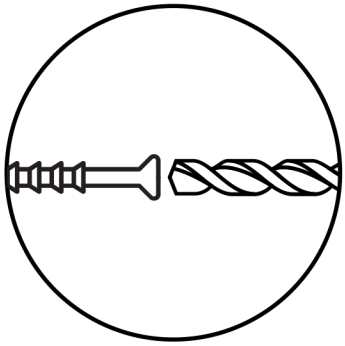

2. Match the drill bit to the wall anchor and hole size.

3. Only drill horizontally. Do not force the drill or enlarge the hole for the wall anchor.

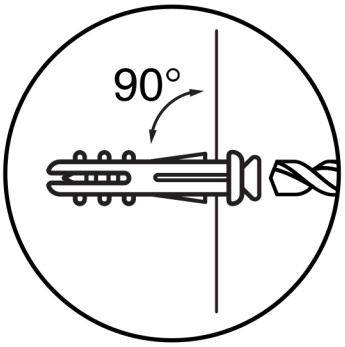

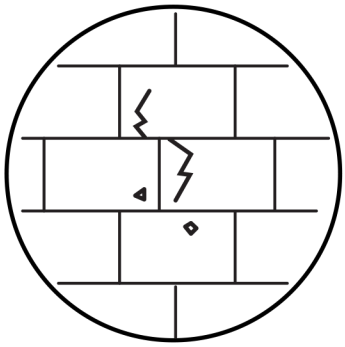

4. Take extra care when drilling into high walls or ceramic tiles. Wall anchors should be a tight fit for the hole. Never use wall anchors in ceilings.

MAINTENANCE

We recommend a yearly check to see if the wall anchor or screw has loosened. If so, please remove the existing wall anchor and screw, and use a new anchor.