INSTALLATION

Product Manual

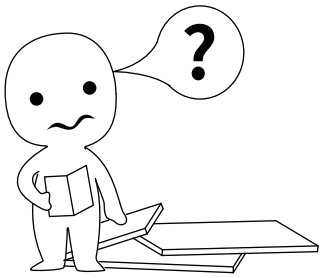

IMPORTANT INFORMATION!

please read the entire manual before starting to assemble and/or using this product.follow the manual thoroughly and keep it for further reference.

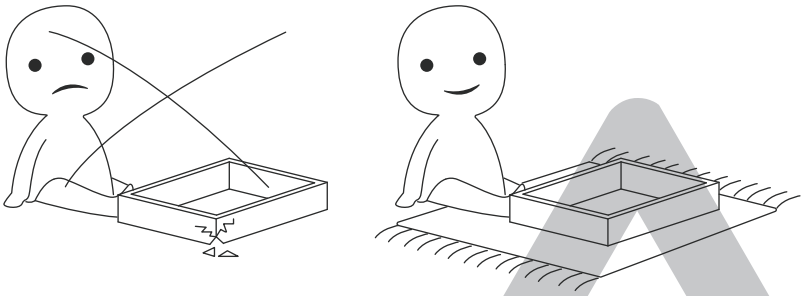

AVOID SCRATCHES!

In order to avoid scratching this furnuture should be assembled on a soft layer-could be a rug.

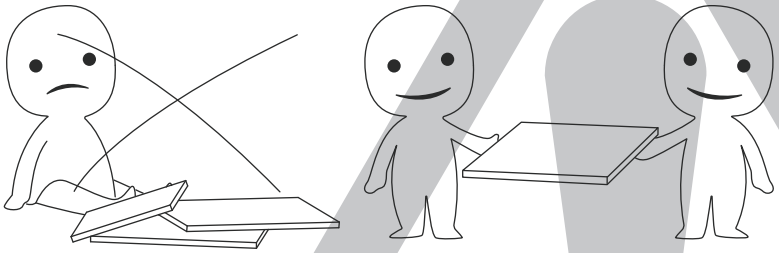

IMPROVE EFFICIENCY !

Try to find a partner to install with you, which can speed up the installation efficiency and shorten the time.

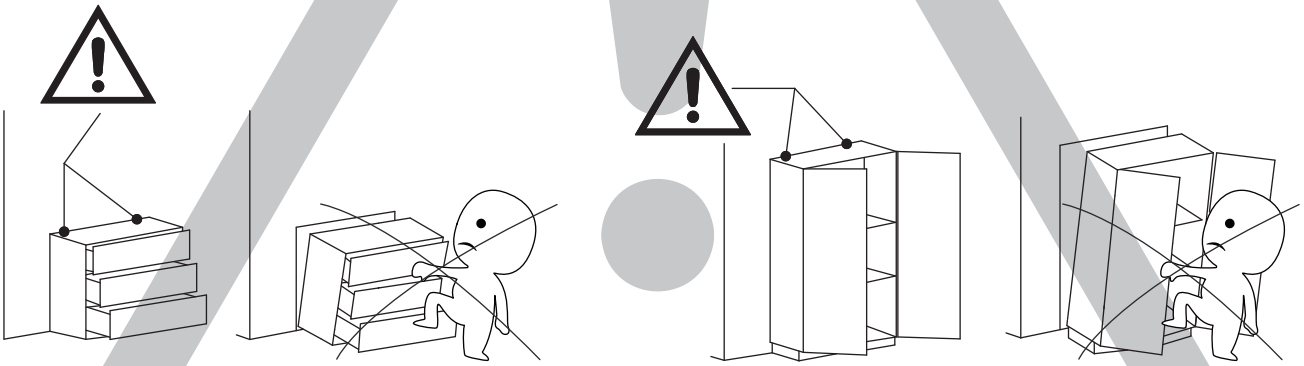

ANTI-TOPPLE WARNING !

Overturned furniture can cause serious or fatal crush injuries. To prevent tipping over, be sure to use the wall attachment, if not included with this product. Please purchase the wall attachment that fit your wall. If unsure, seek professional advice. Please read and follow each step of the instructions carefully.

IMPORTANT !

It is important that any product which is assembled using any kind of screw is re-tightened 2 weeks after assembly,and once every 3 months - in order to assure stability through-out the lifespan of the product.

For regular maintenance and cleaning of the product, for the frame, please use a rag dipped in neutral detergent to fully wipe it, and then dry it with a clean rag.For glass materials, wipe with a rag dampened with water glass cleaner, and then dry with a dry rag.

Do not use an electric screwdriver, and do not use too much force when installing, because the board is easy to break.

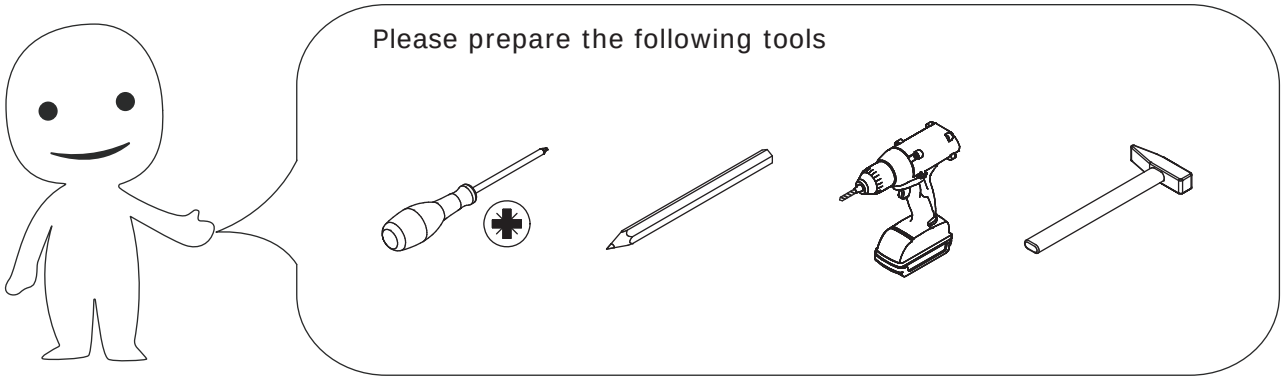

When installing, please carefully confirm whether each screw corresponds to the manual, accessories with similar shapes can be distinguished by size

A x 41	B x 41	C x 53	D x 38	E x 240
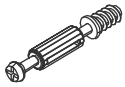 M5 x 42 mm	∅15 x 12 mm	M5 x 40 mm	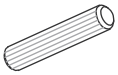 ∅8 x 40 mm	M3.5 x 14 mm

F x 10	G x 8	H x 2	I x 16	J x 18
M6 x 12 mm	M6 x 25 mm	M3 x 25 mm	M3 x 14 mm	

K x 8	L x 12	M x 4	N x 2	O x 2
∅6 mm	M4 x 16 mm	6612-96	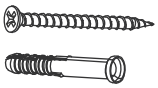 M5 x 55 mm ∅8 x 60 mm	

P x 18	Q x 8	R x 8	S x 20	T x 4
	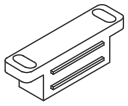	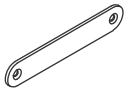	∅21 x 1 mm	113

x 1
#4

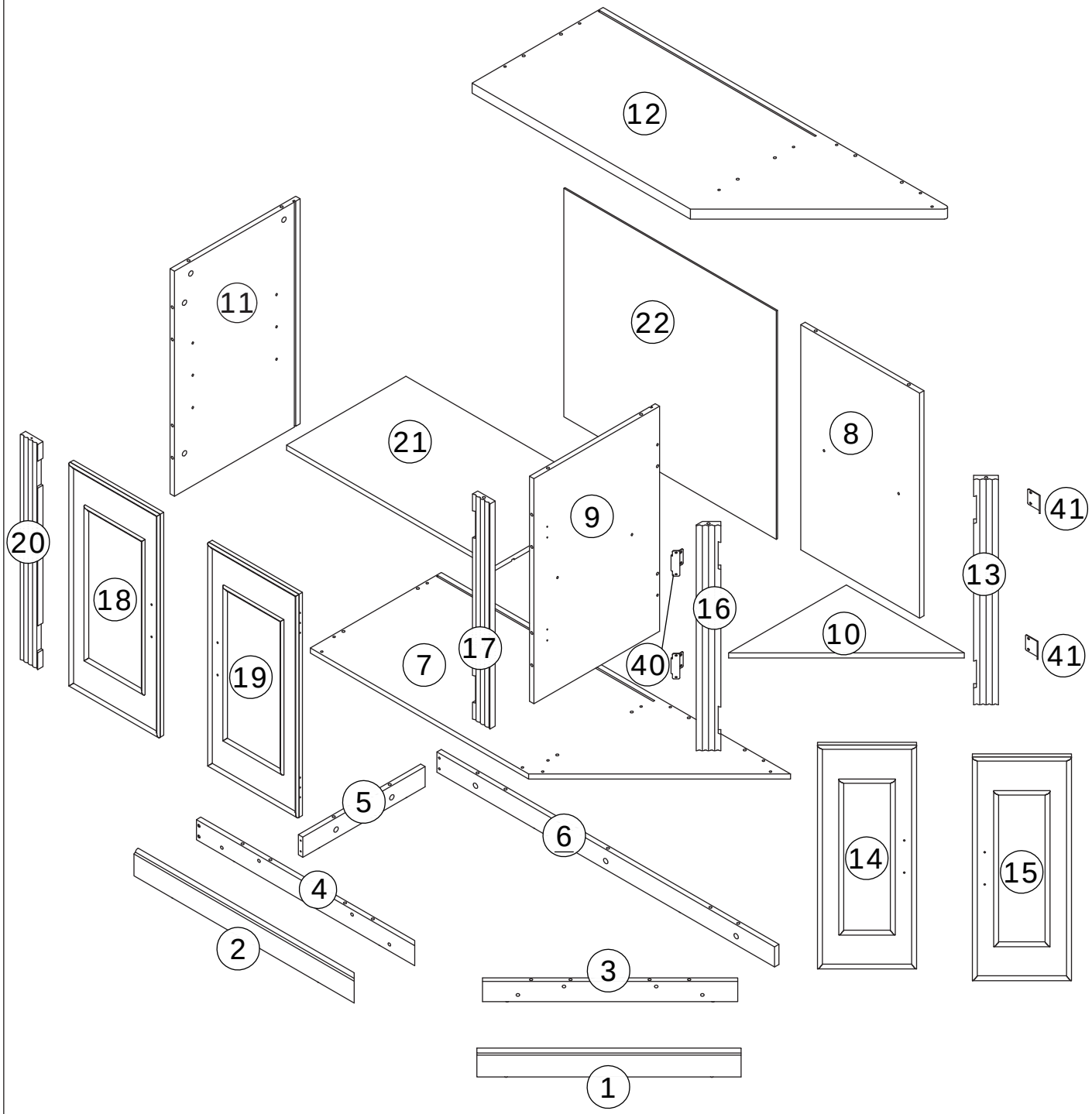
12
11
22
21
8
9
20
18
19
17
7
16
40
10
13
41
41
5
6
4
2
3
14
15
1

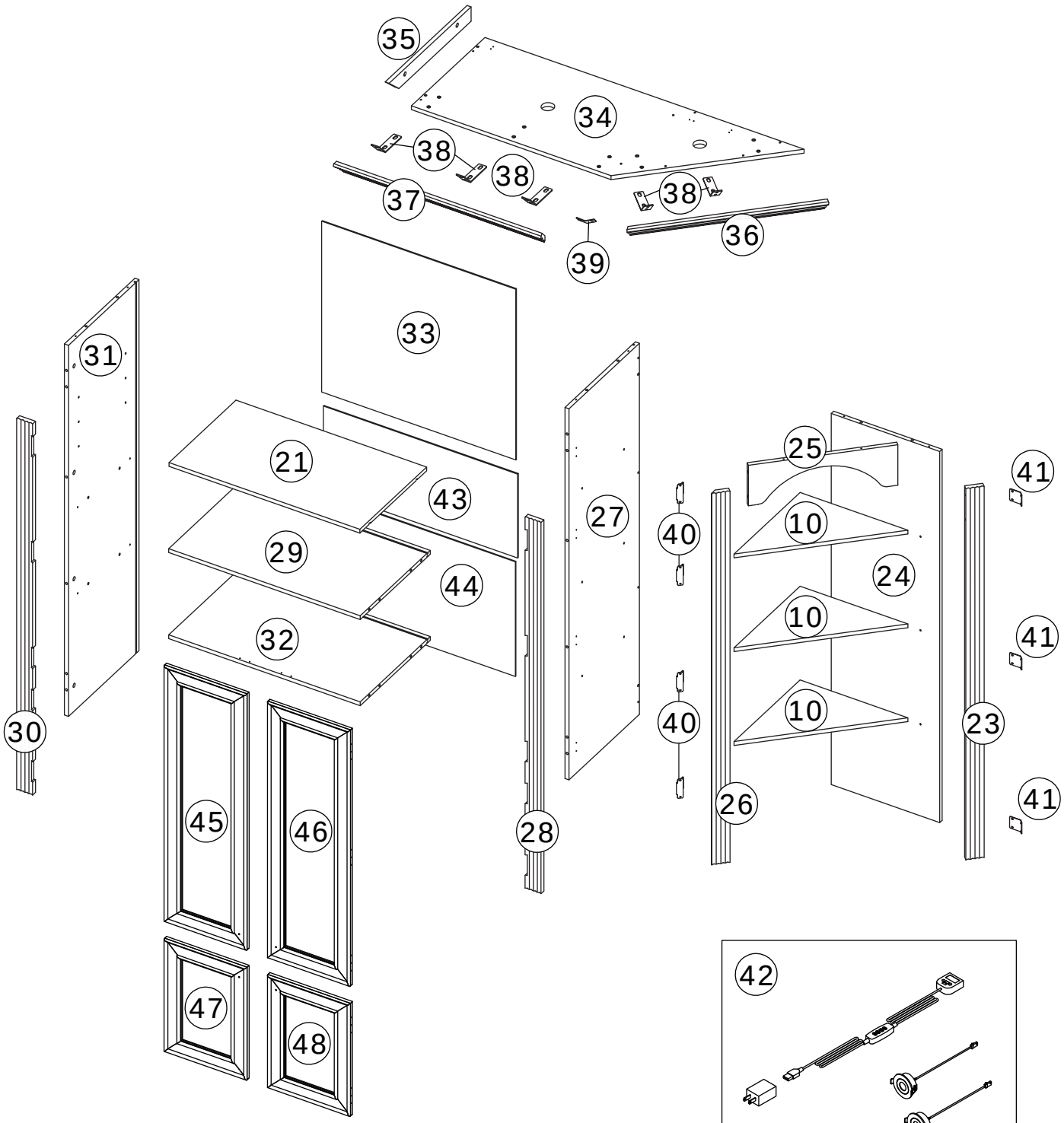

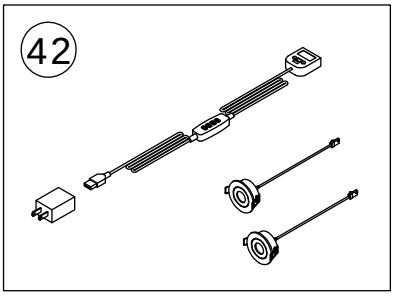

⚠WARNING

Children have died from furniture tipover.To reduce the risk of furniture tipover:

- ALWAYS install Anti-tip device provided.
- NEVER put a TV on this product.
- NEVER allow children to stand,climb or hang on drawers,doors,or shelves.
- NEVER open more than one drawer at a time.
- Place heaviest items in the lowest drawers.

This is a permanent label.
Do not remove!

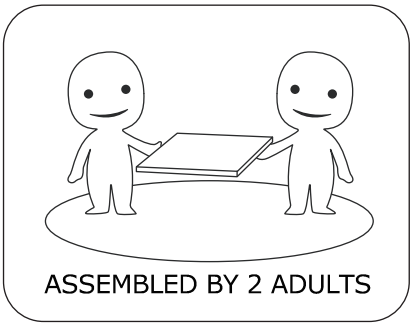

1

C x 2

M5 x 40 mm

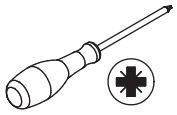

Attach plate 10 to plate 8 and secure it with screws (C).

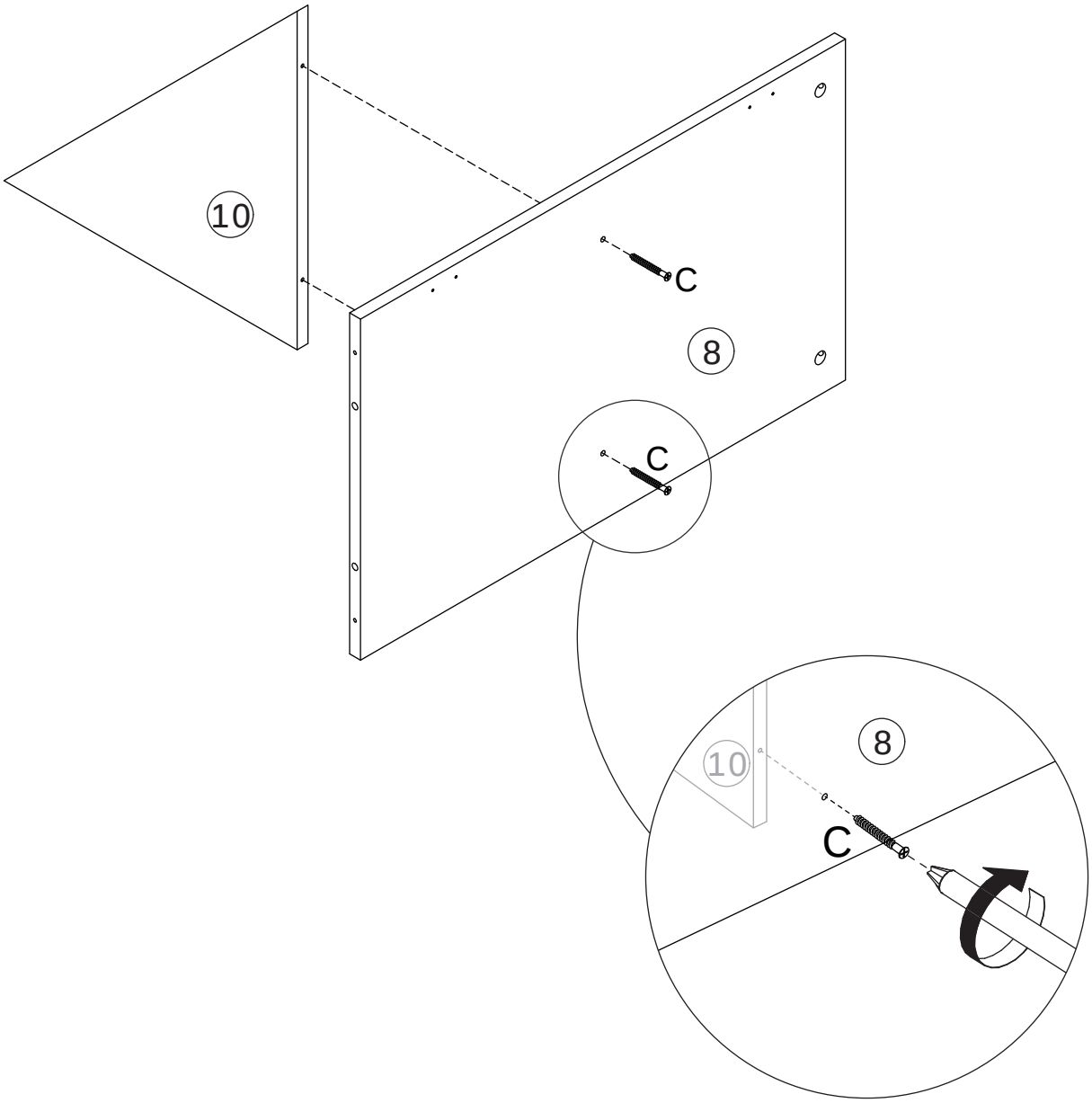

2

C x 4	D x 2	
M5 x 40 mm	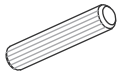 ∅8 x 40 mm	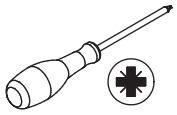

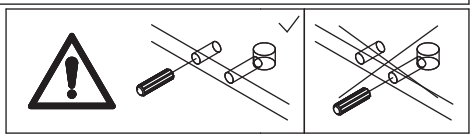

Connect plates 8 and 10 to plate 9 using wooden dowels (D), and secure them with screws (C).

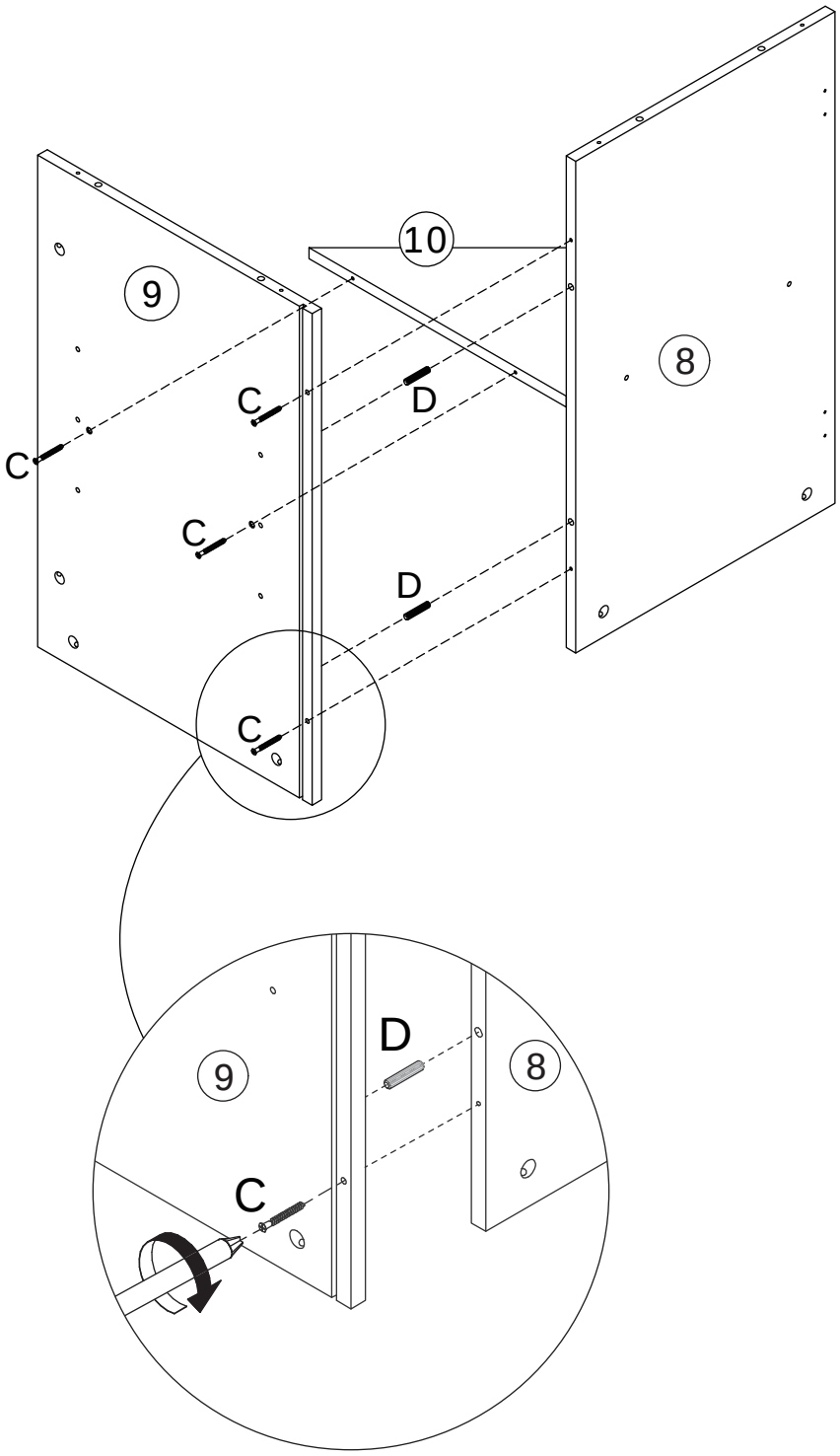

3

A x 2	E x 10	P x 2	
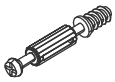 M5 x 42 mm	M3.5 x 14 mm		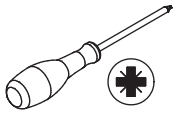

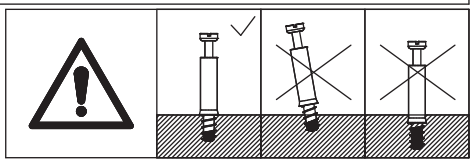

First screw eccentric rod (A) to plate 17, then secure hinges (P) to plate 17 using screws (E).

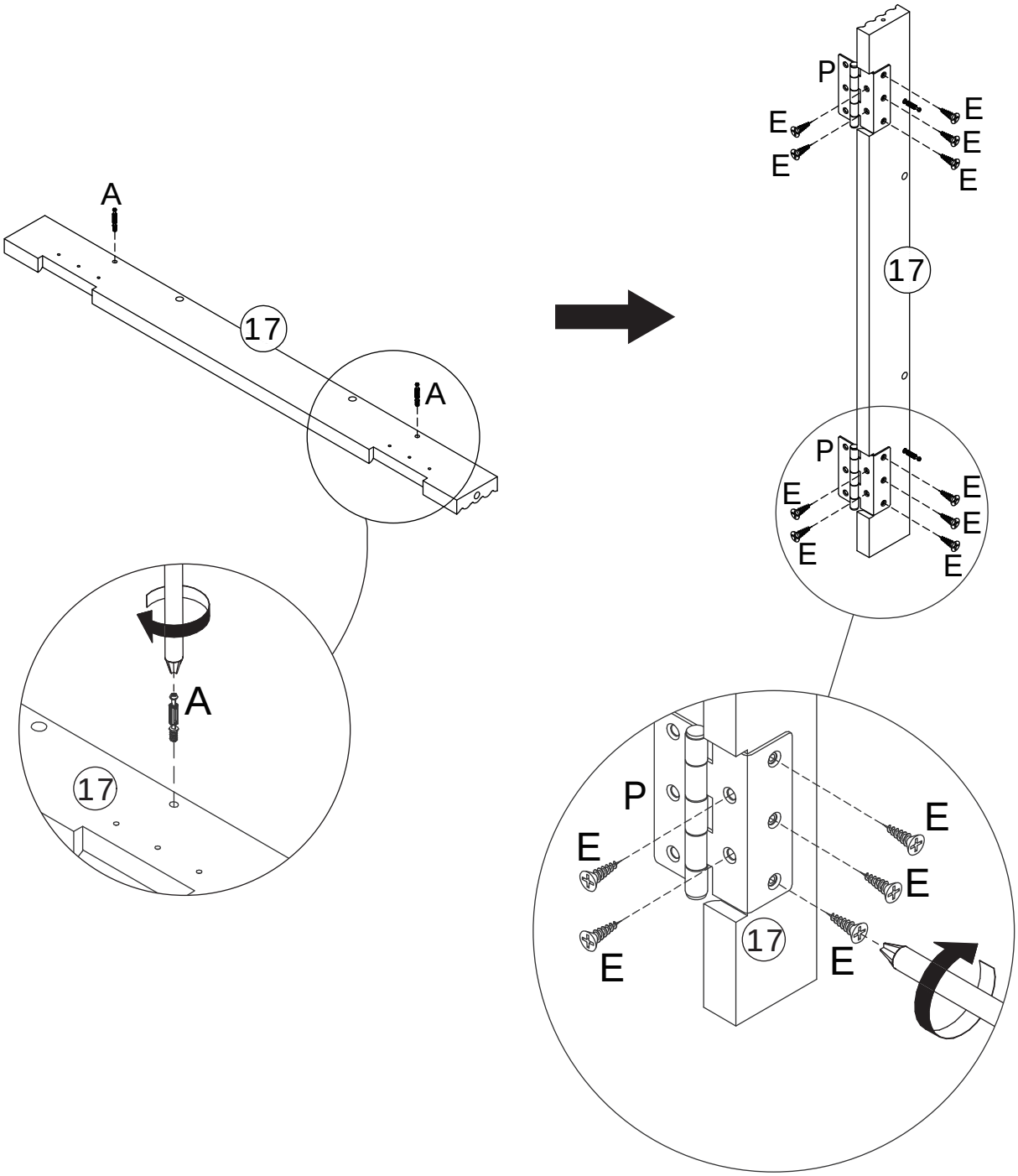

4

B x 2	D x 2	
	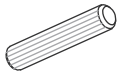	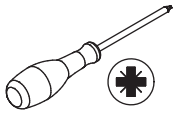
∅15 x 12 mm	∅8 x 40 mm	

Connect plate 17 to plate 9 using wooden dowels (D), then insert the eccentric wheel (B) and tighten it by turning clockwise.

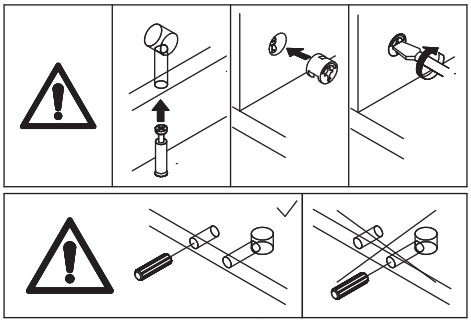

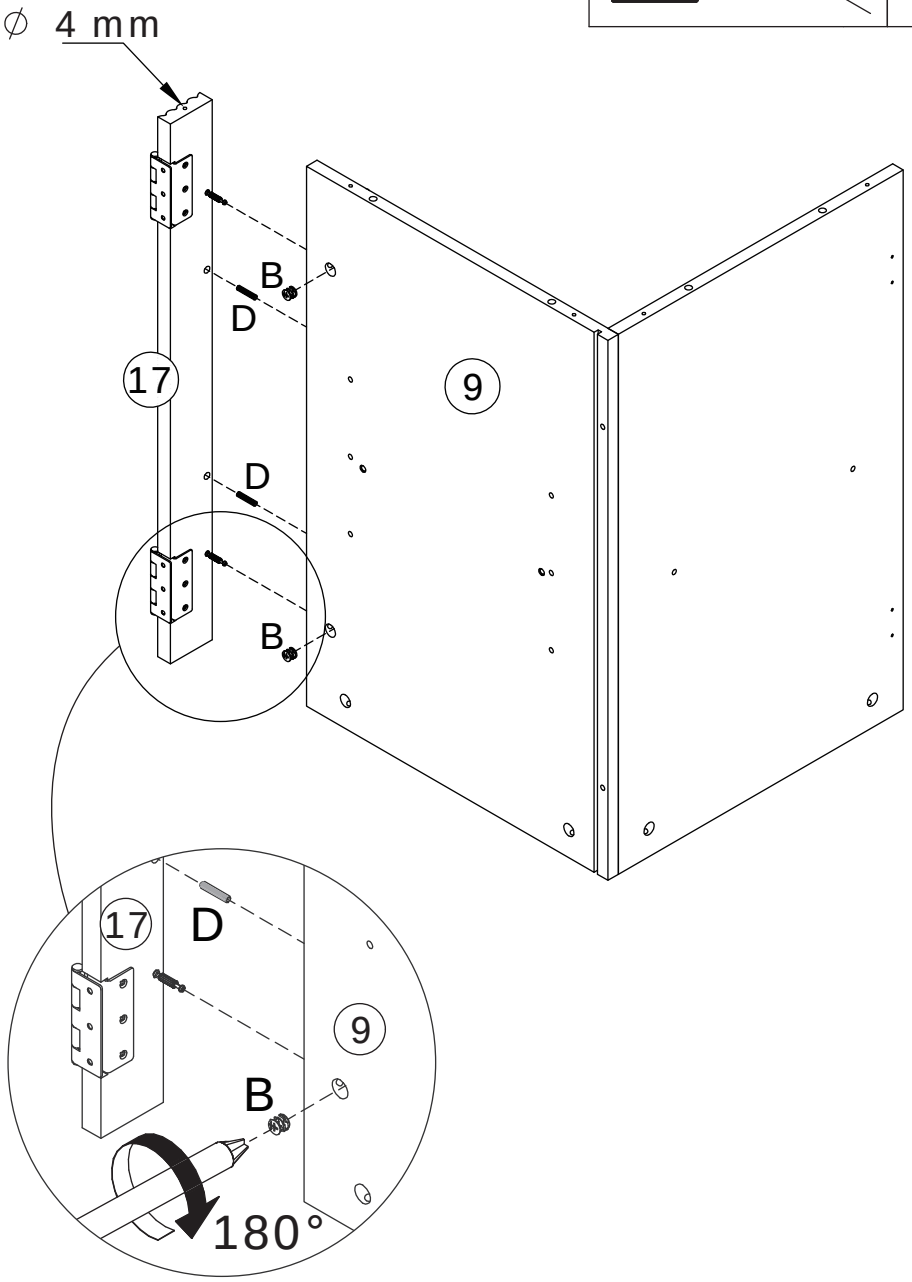

5

E x 14	P x 2	
M3.5 x 14 mm		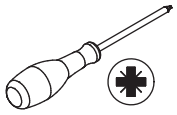

First secure part 40 to plate 16 using screws (E), then secure hinges (P) to plate 16 using screws (E).

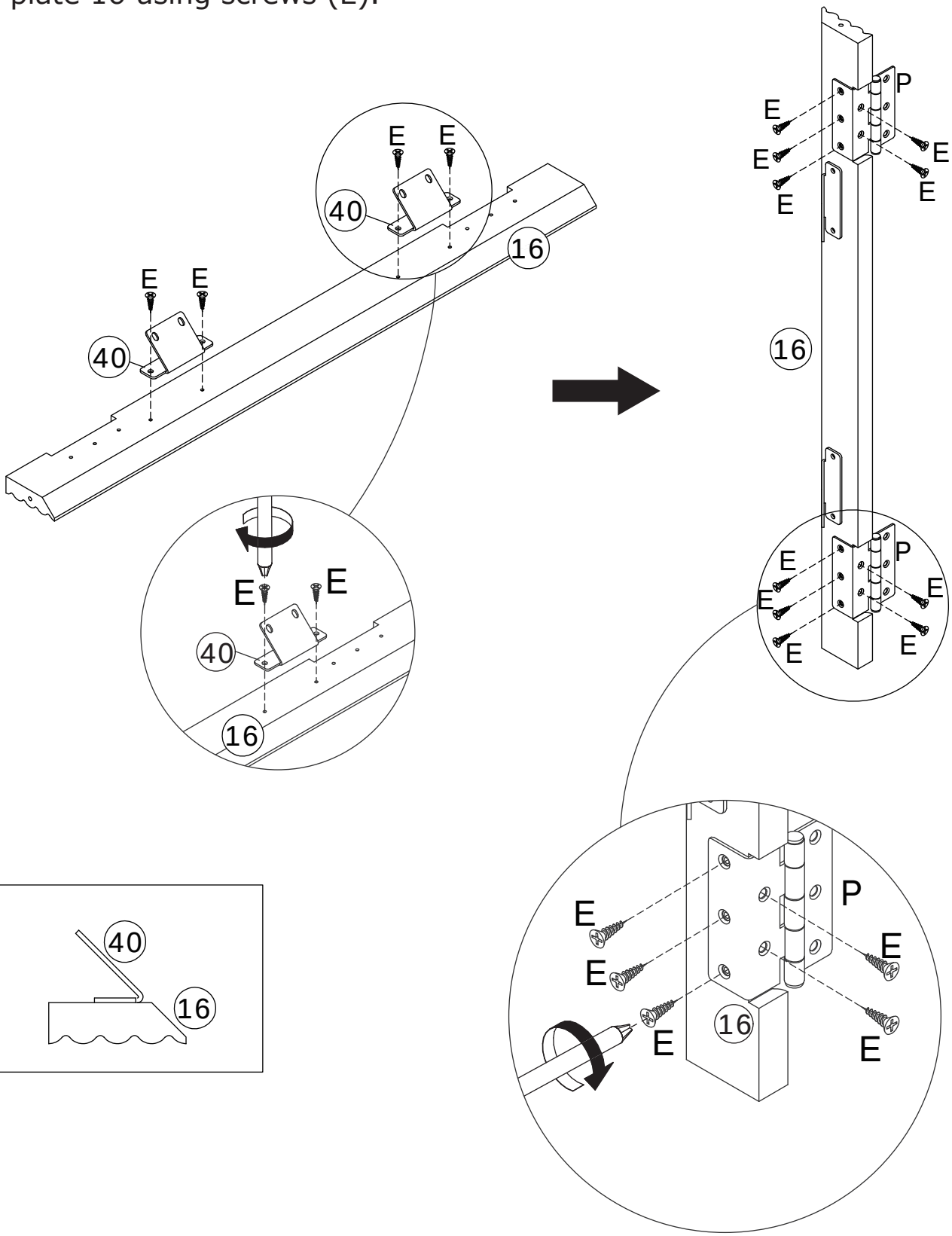

6

E x 4

M3.5 x 14 mm

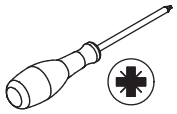

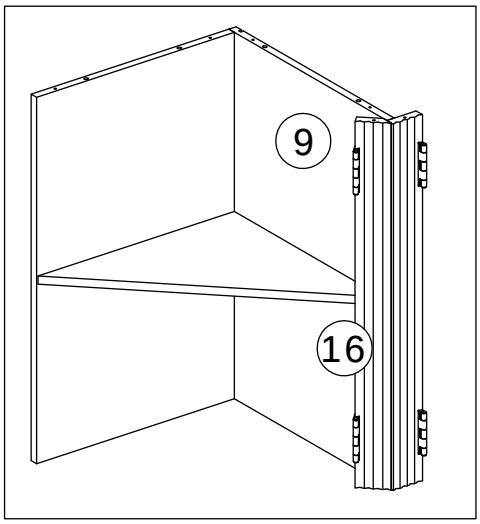

Secure part 40 to plate 9 using screws (E).

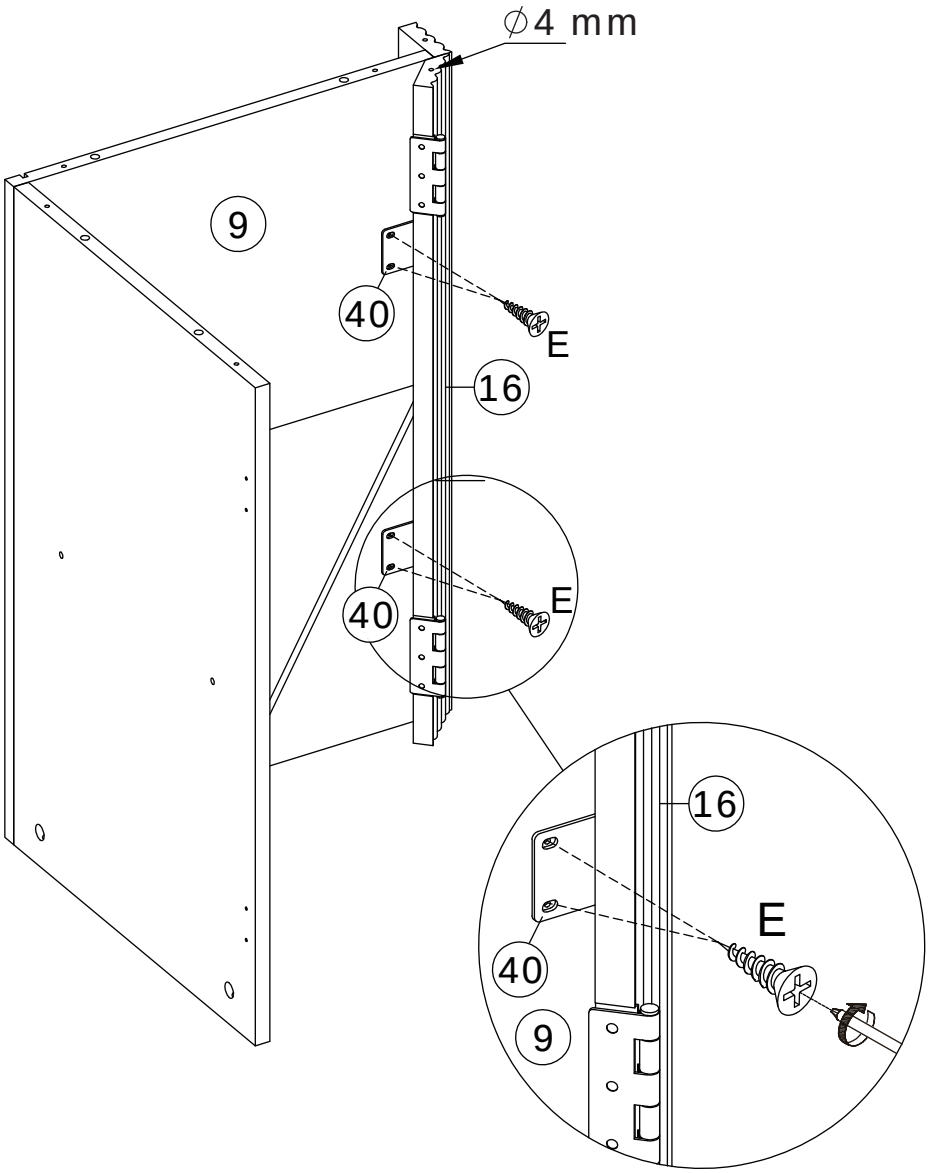

7

E x 14	P x 2	
M3.5 x 14 mm		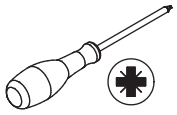

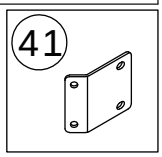

First secure hinges (P) to plate 13 using screws (E), then secure part 41 to plate 13 using screws (E).

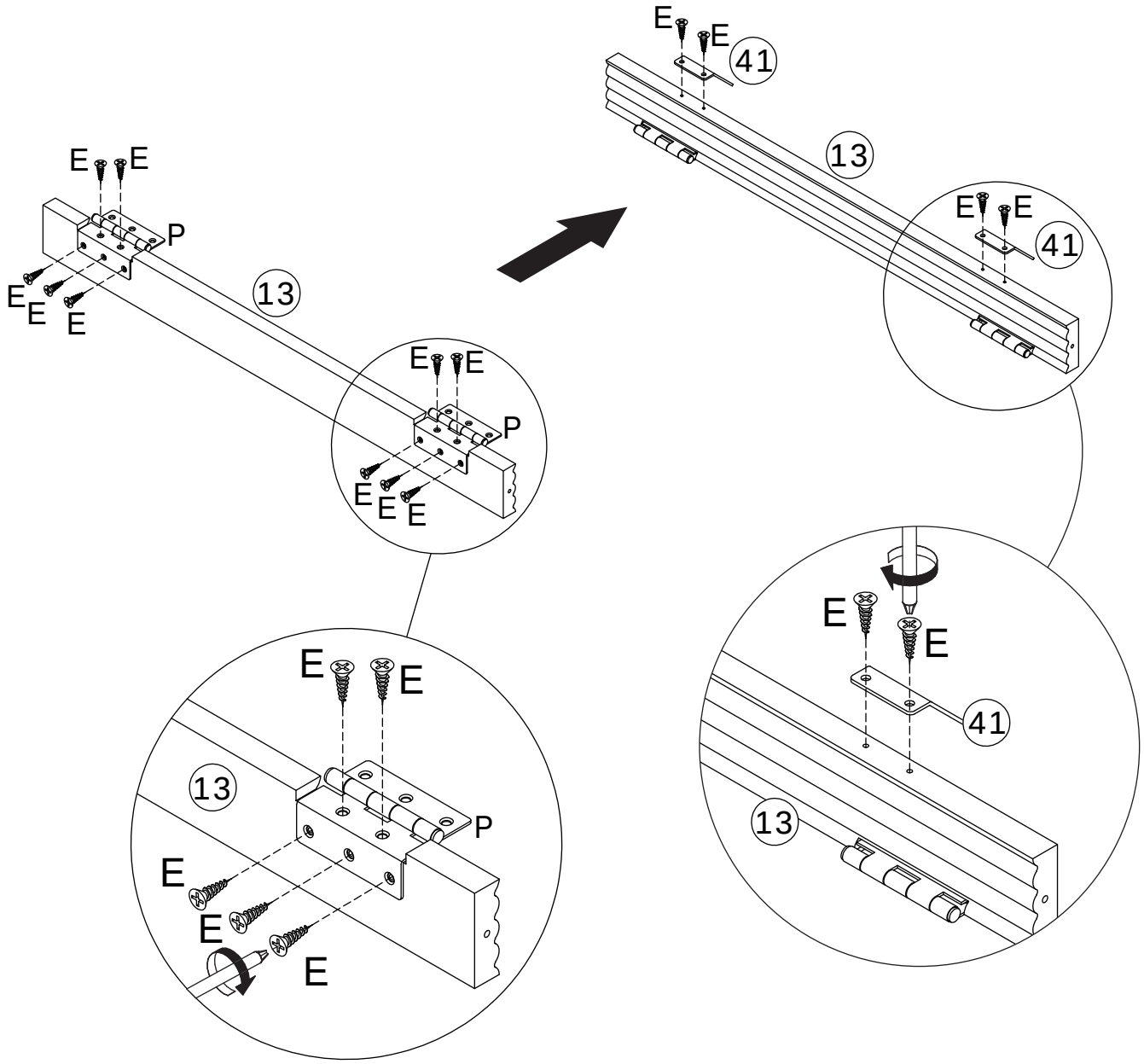

8

E x 4

M3.5 x 14 mm

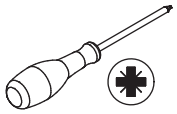

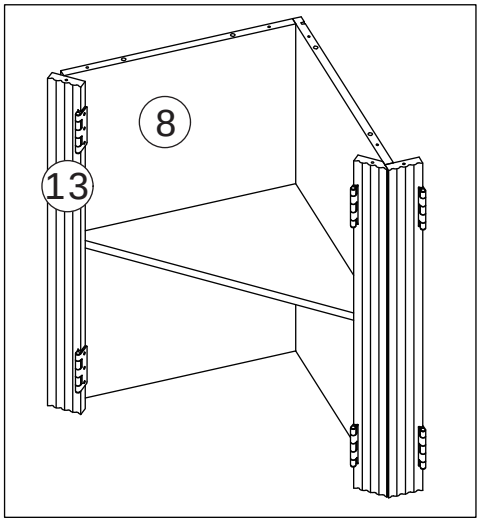

Secure part 41 to plate 8 using screws (E).

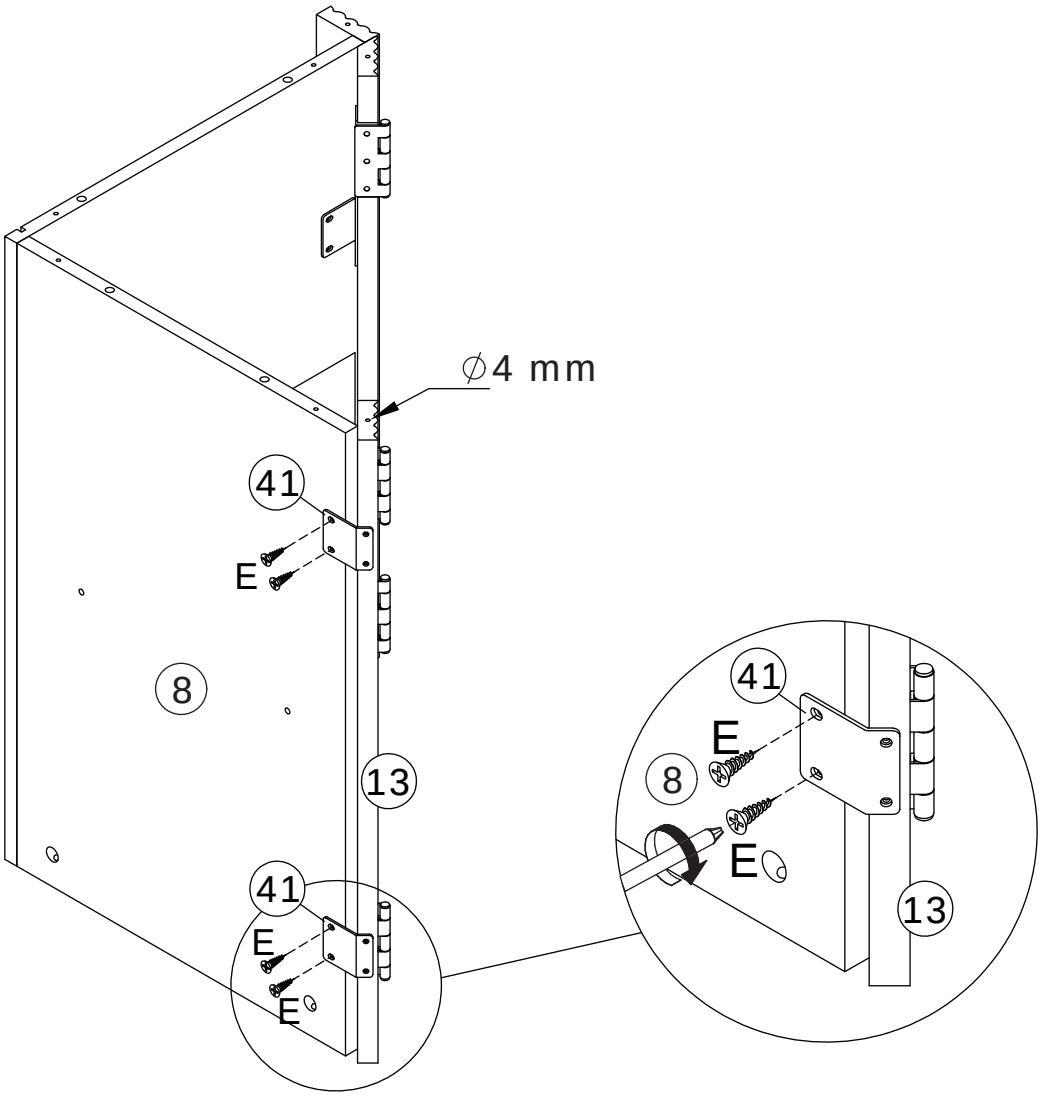

9

A x 2	E x 10	P x 2	
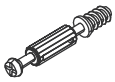 M5 x 42 mm	M3.5 x 14 mm		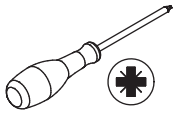

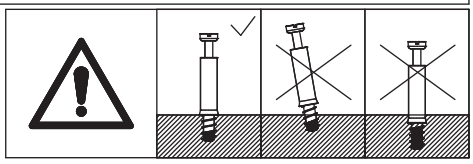

First screw eccentric rod (A) to plate 20, then secure hinges (P) to plate 20 using screws (E).

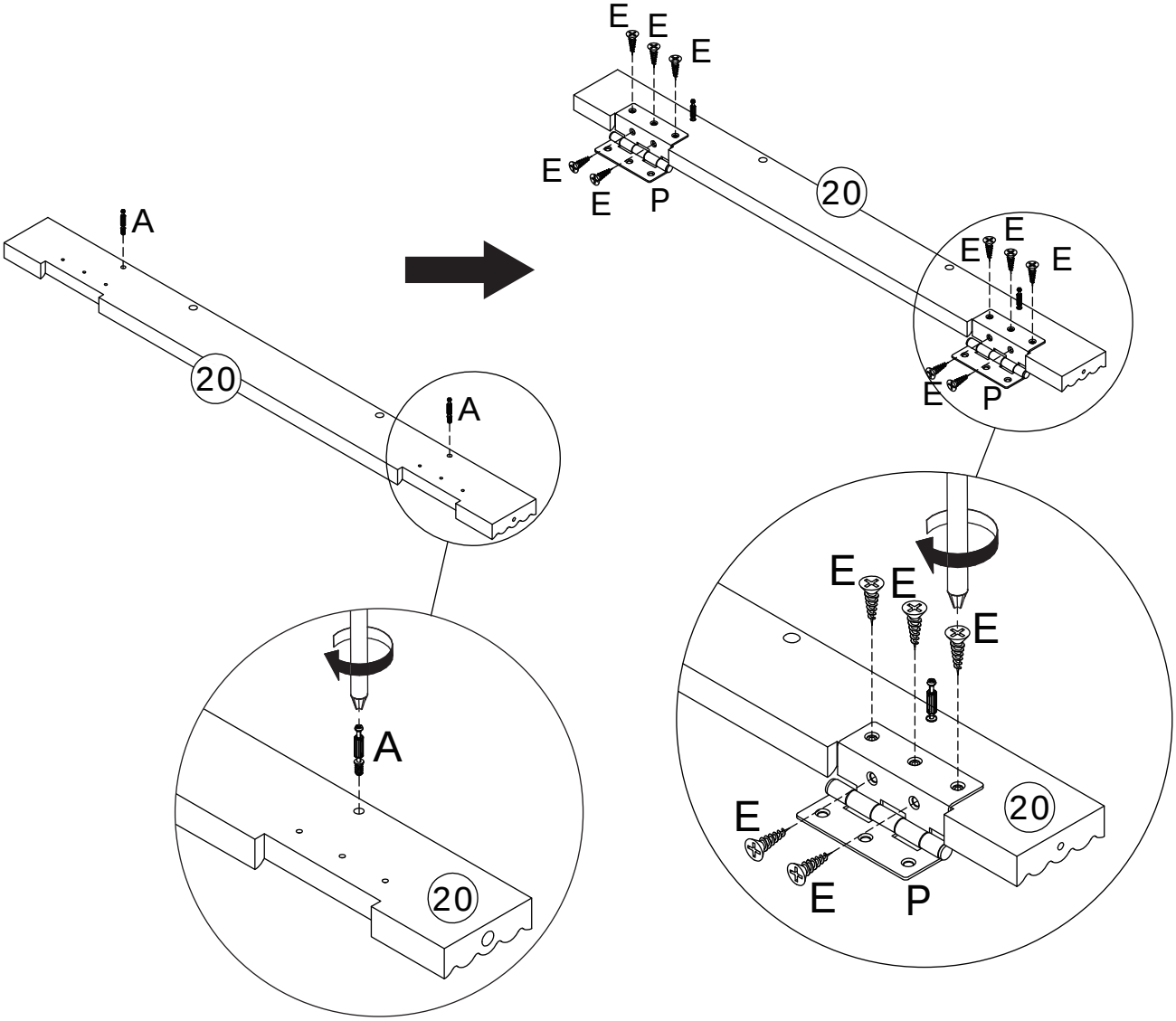

10

B x 2	D x 2	
	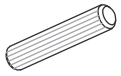	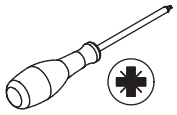
∅15 x 12 mm	∅8 x 40 mm	

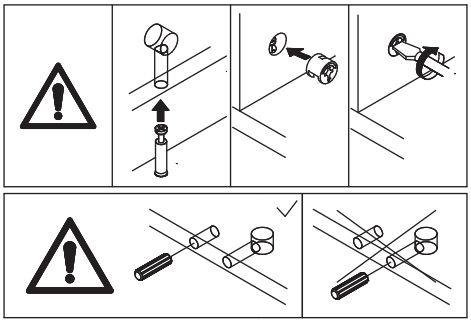

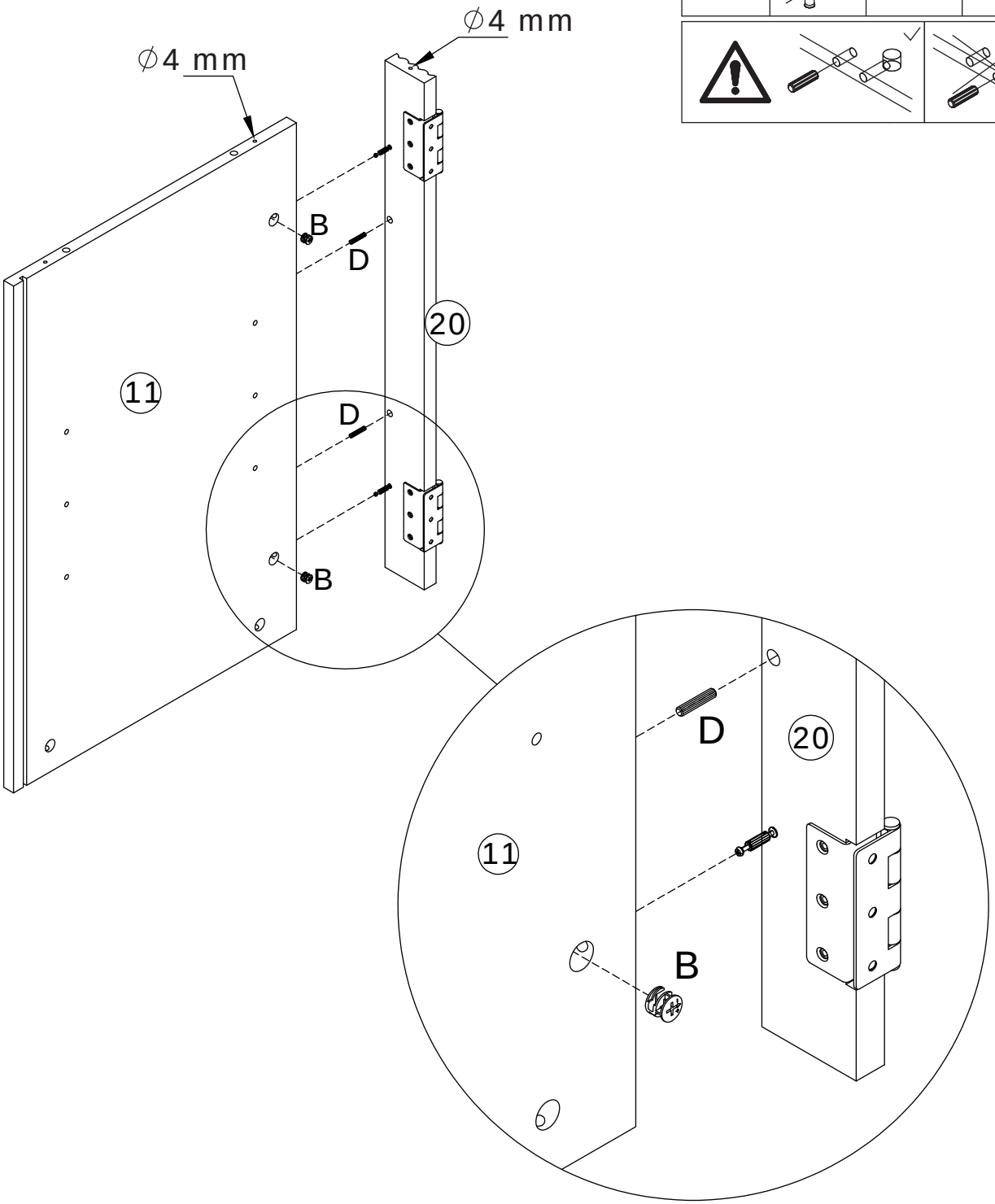

Connect plate 20 to plate 11 using wooden dowels (D), then insert the eccentric wheel (B) and tighten it by turning clockwise.

11

D x 6

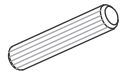

∅8 x 40 mm

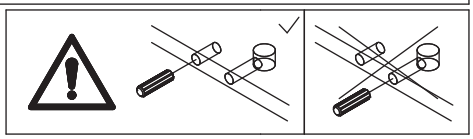

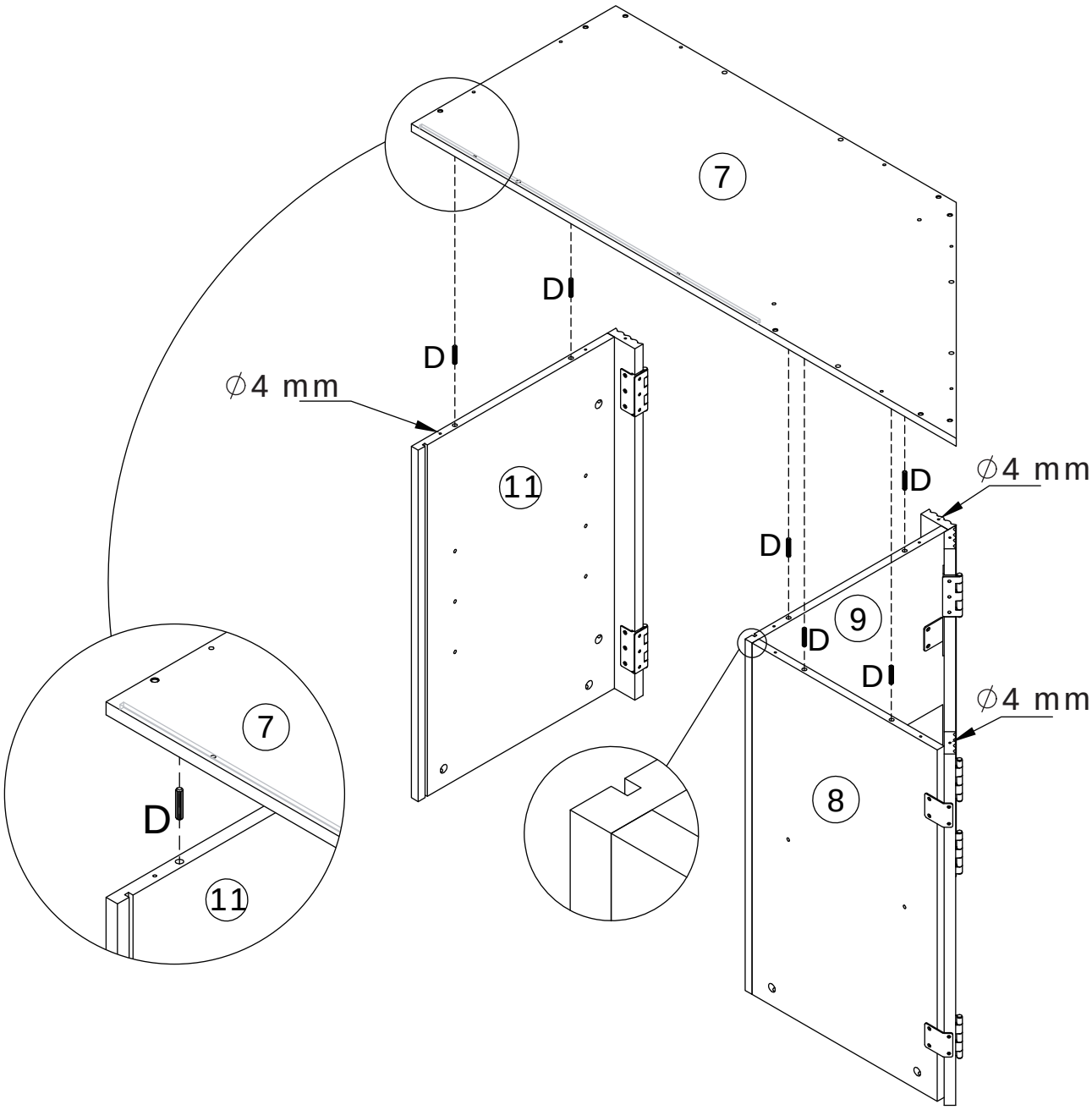

Connect plate 7 to plates 8, 9, and 11 using wooden dowels (D).

12

C x 10

M5 x 40 mm

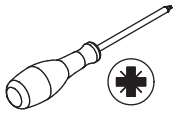

Secure plate 7 to plates 8, 9, 11, 13, and 20 using screws (C).

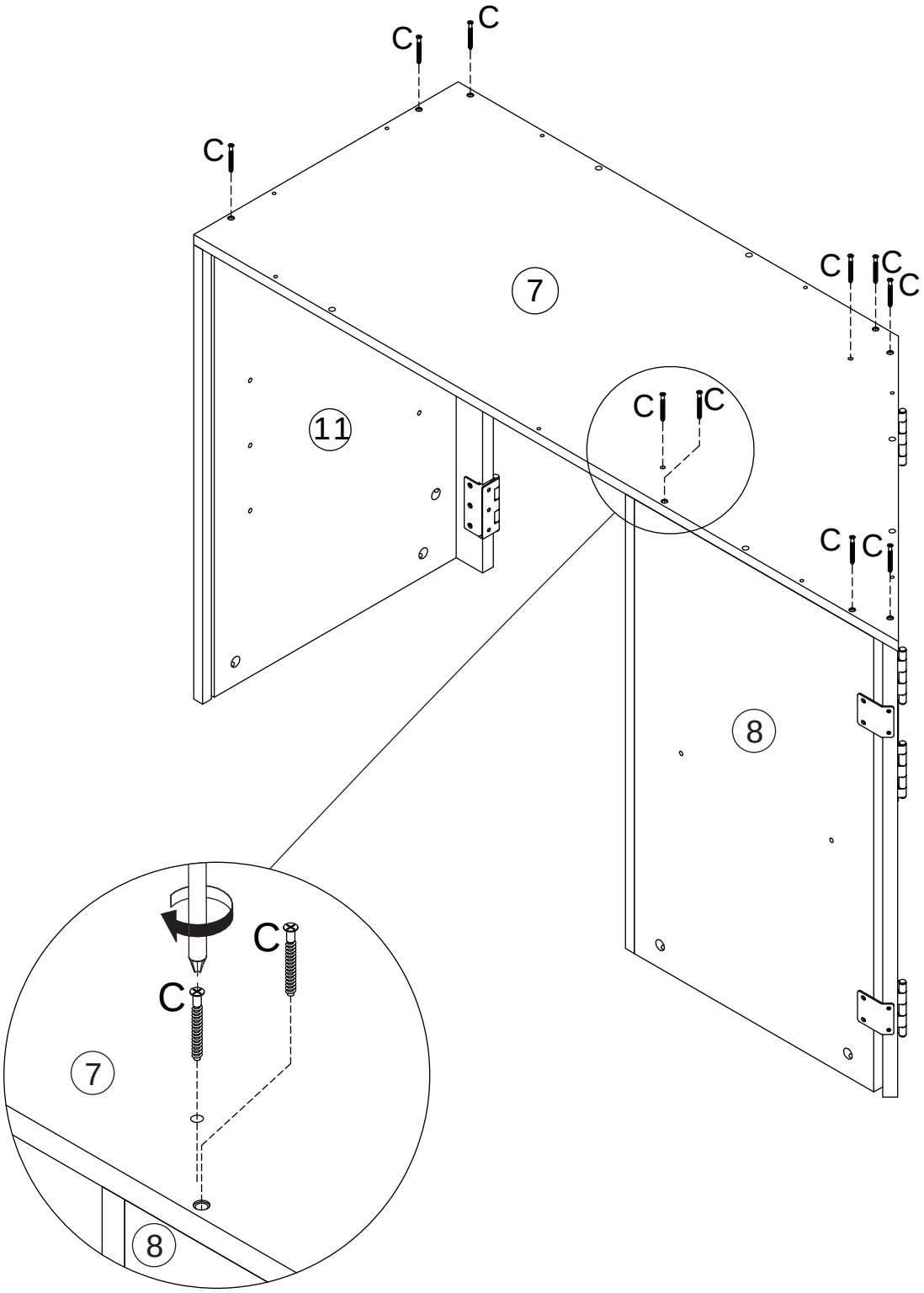

13

A x 9

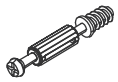

M5 x 42 mm

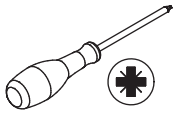

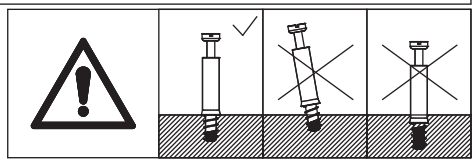

Screw eccentric rod (A) to plate 7.

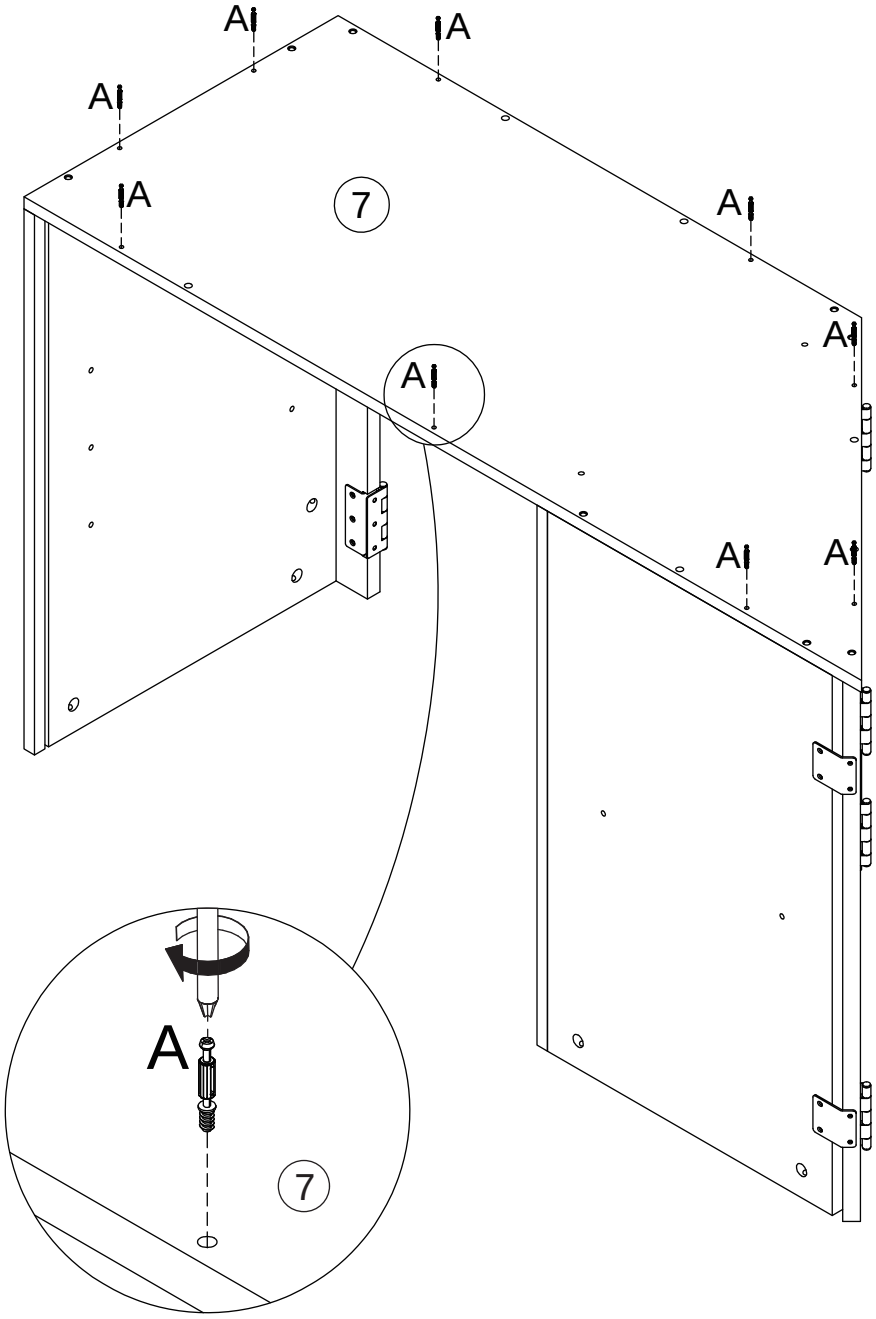

14

B x 2

∅15 x 12 mm

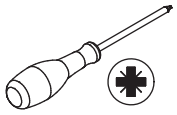

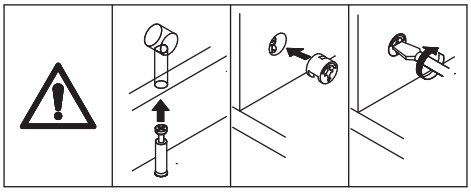

Connect plate 5 to plate 7, then insert the eccentric pulley (B) and tighten it clockwise.

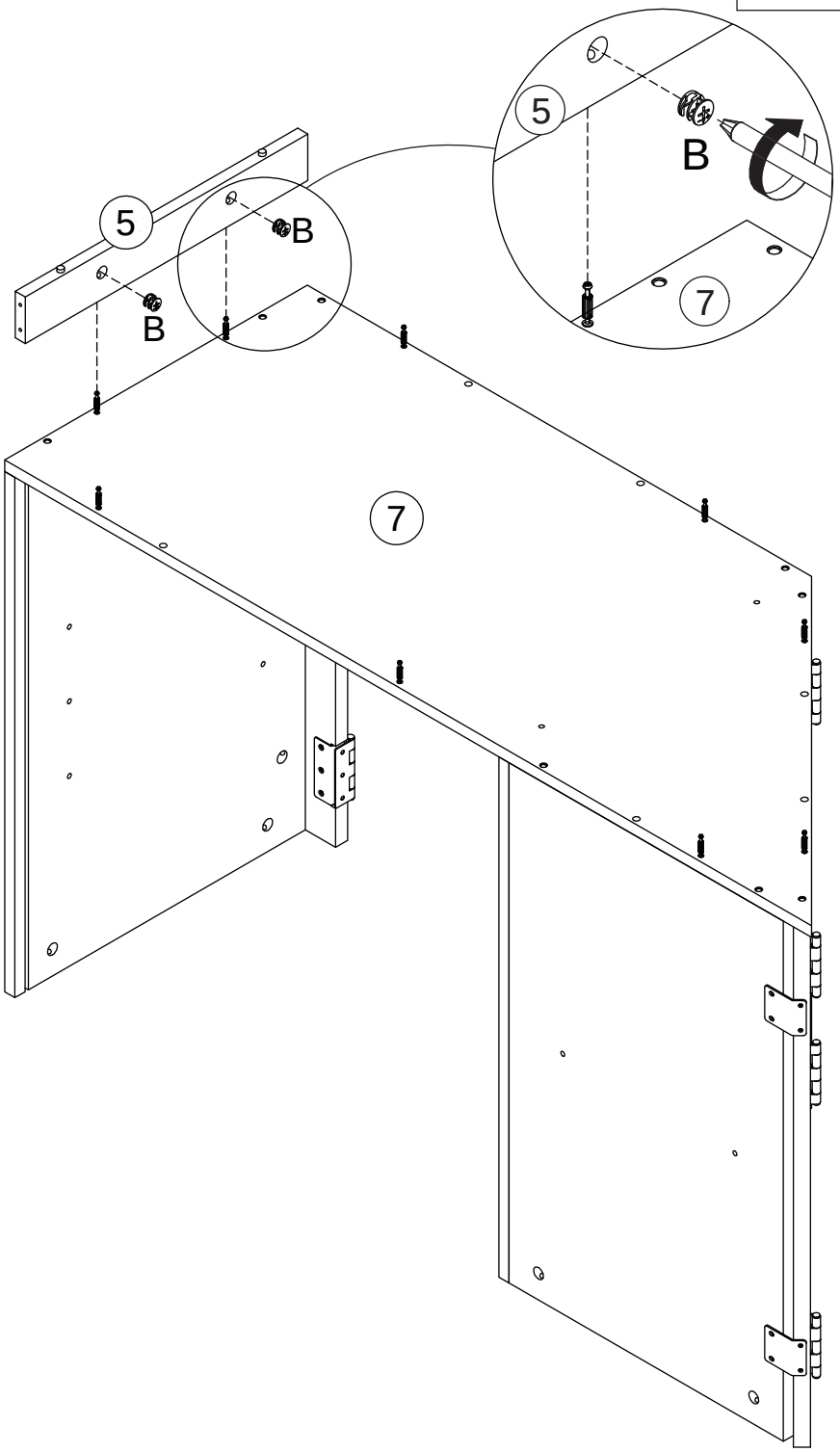

15

B x 5

∅15 x 12 mm

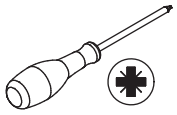

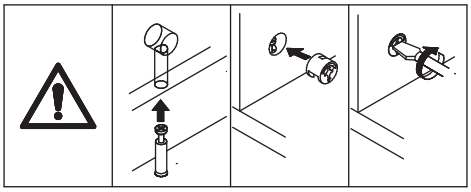

Connect plates 4 and 6 to plate 7, then insert the eccentric pulley (B) and tighten it clockwise.

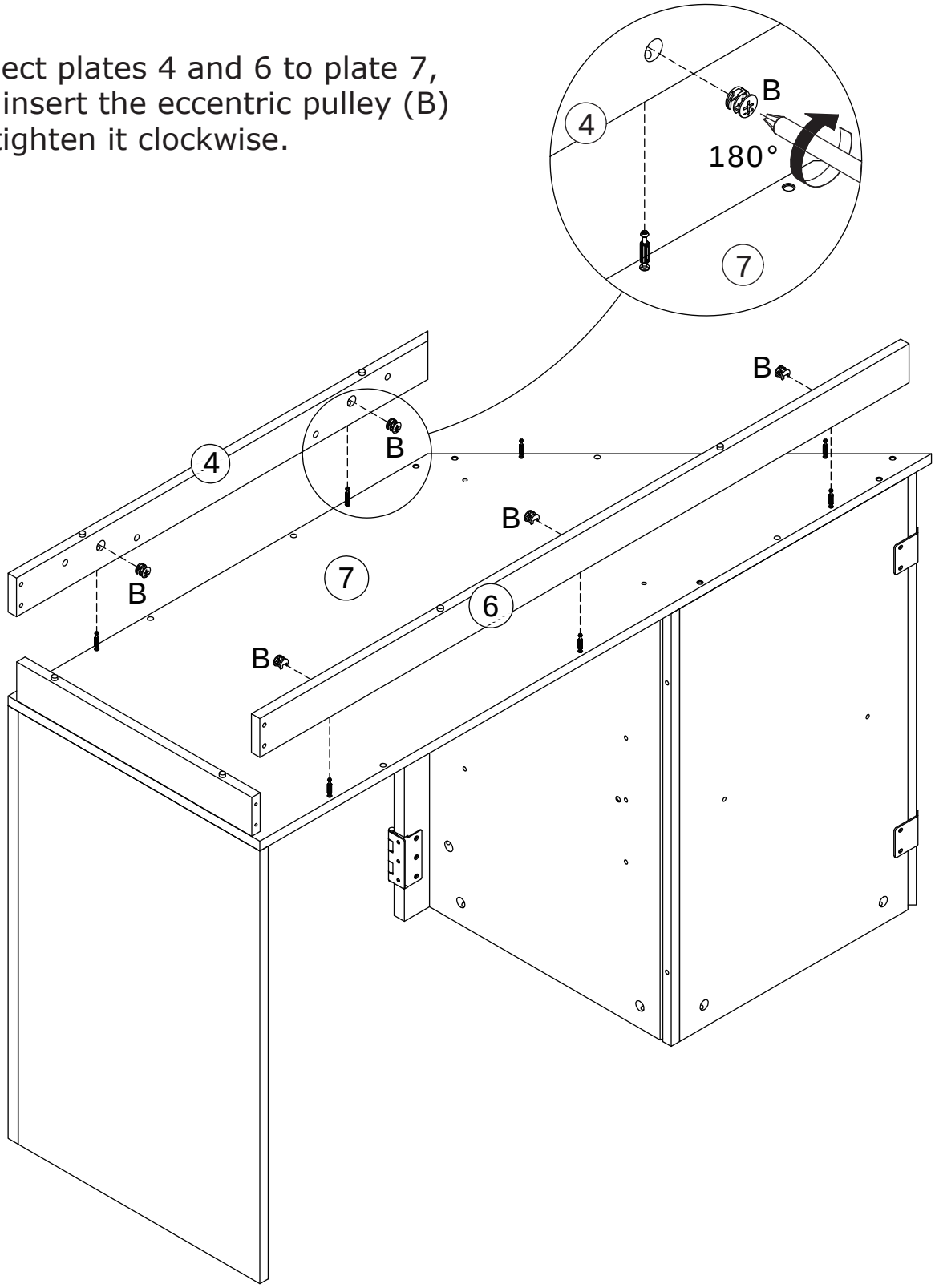

16

B x 2	C x 4	
		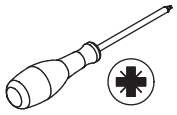
∅15 x 12 mm	M5 x 40 mm	

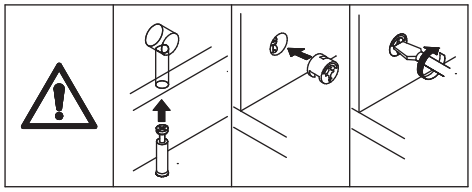

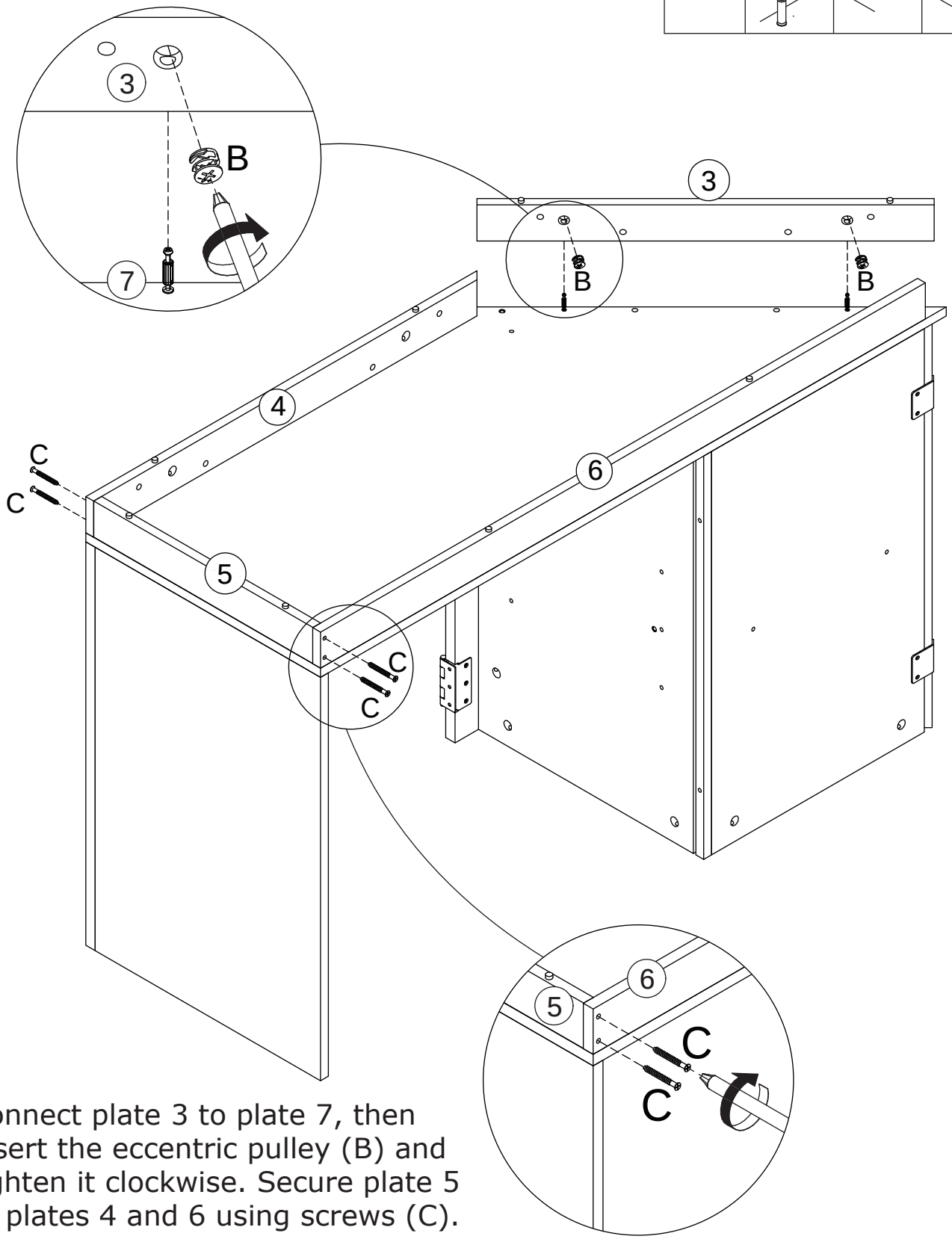

Connect plate 3 to plate 7, then insert the eccentric pulley (B) and tighten it clockwise. Secure plate 5 to plates 4 and 6 using screws (C).

17

G x 8	x 1	
M6 x 25 mm	#4	

Connect plate 2 to plate 4, plate 1 to plate 3, and secure them with screws (G).

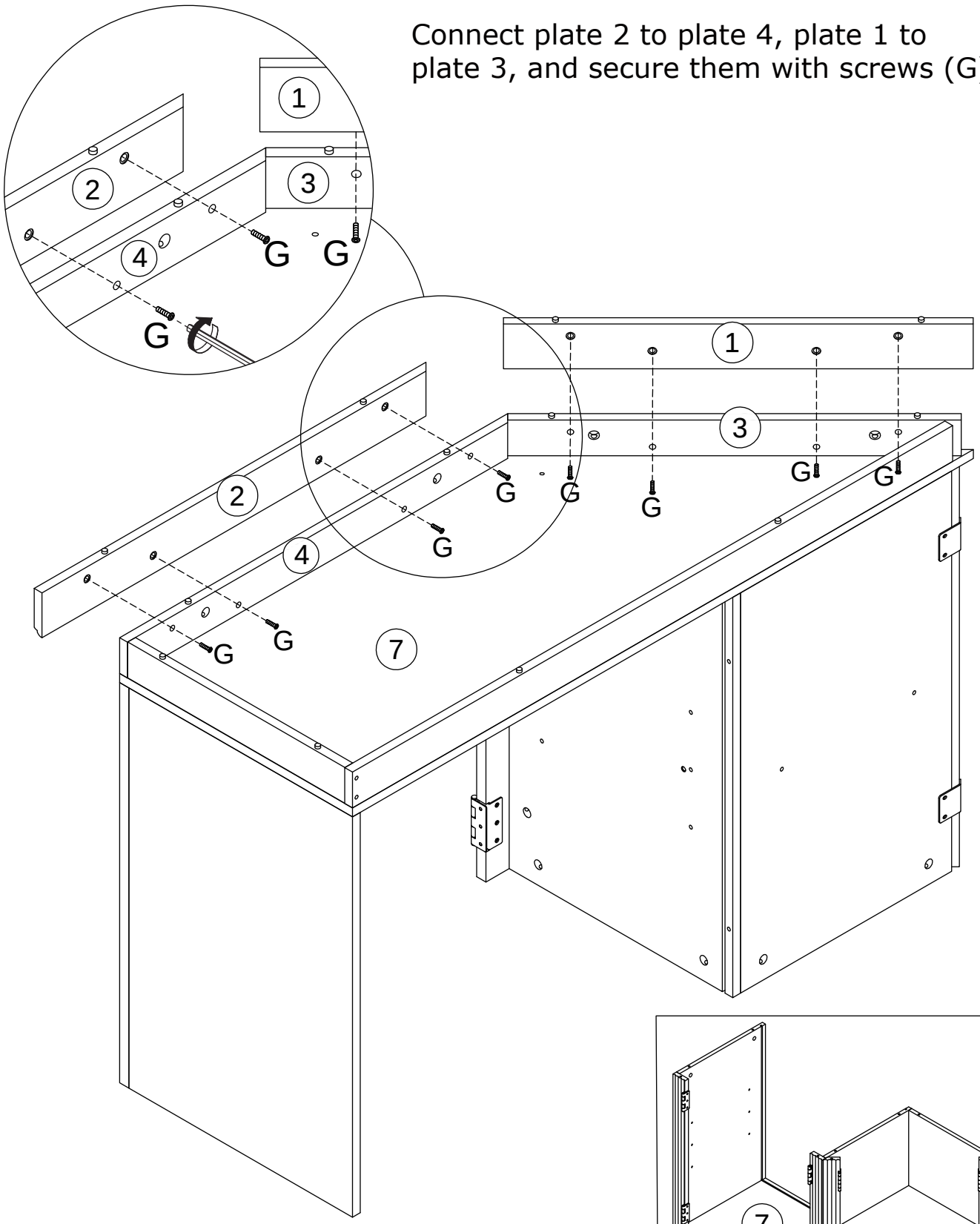

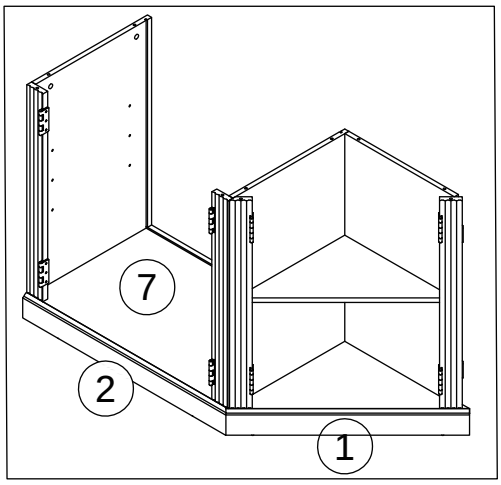

18

D x 4

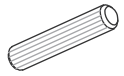

∅8 x 40 mm

Insert wooden dowels (D) to plates 13, 16, 17, and 20.
Insert plate 22 along the available slots.

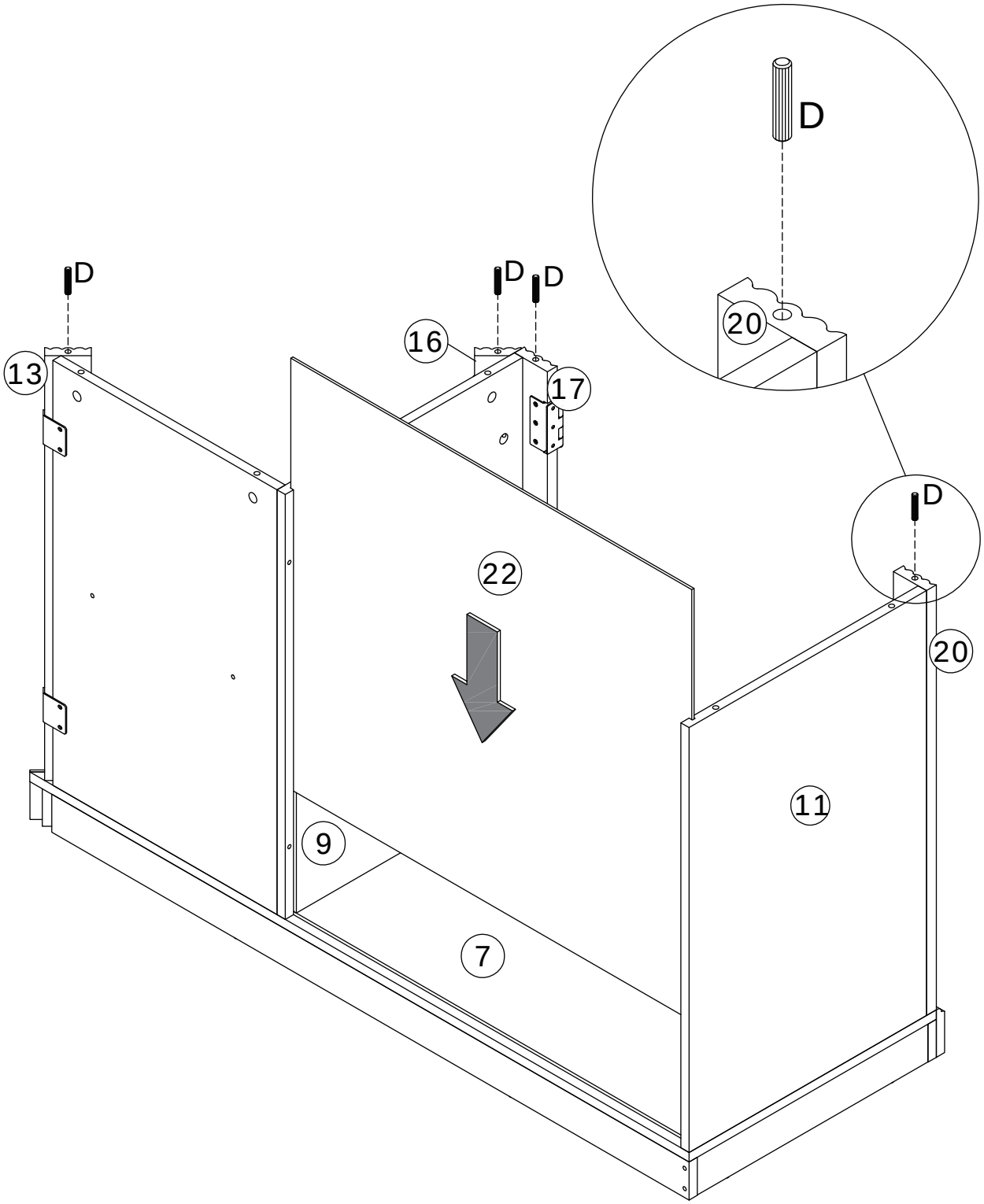

19

C x 6

M5 x 40 mm

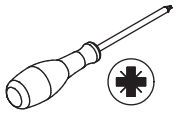

Connect plate 10 to plate 24 and secure them with screws (C).

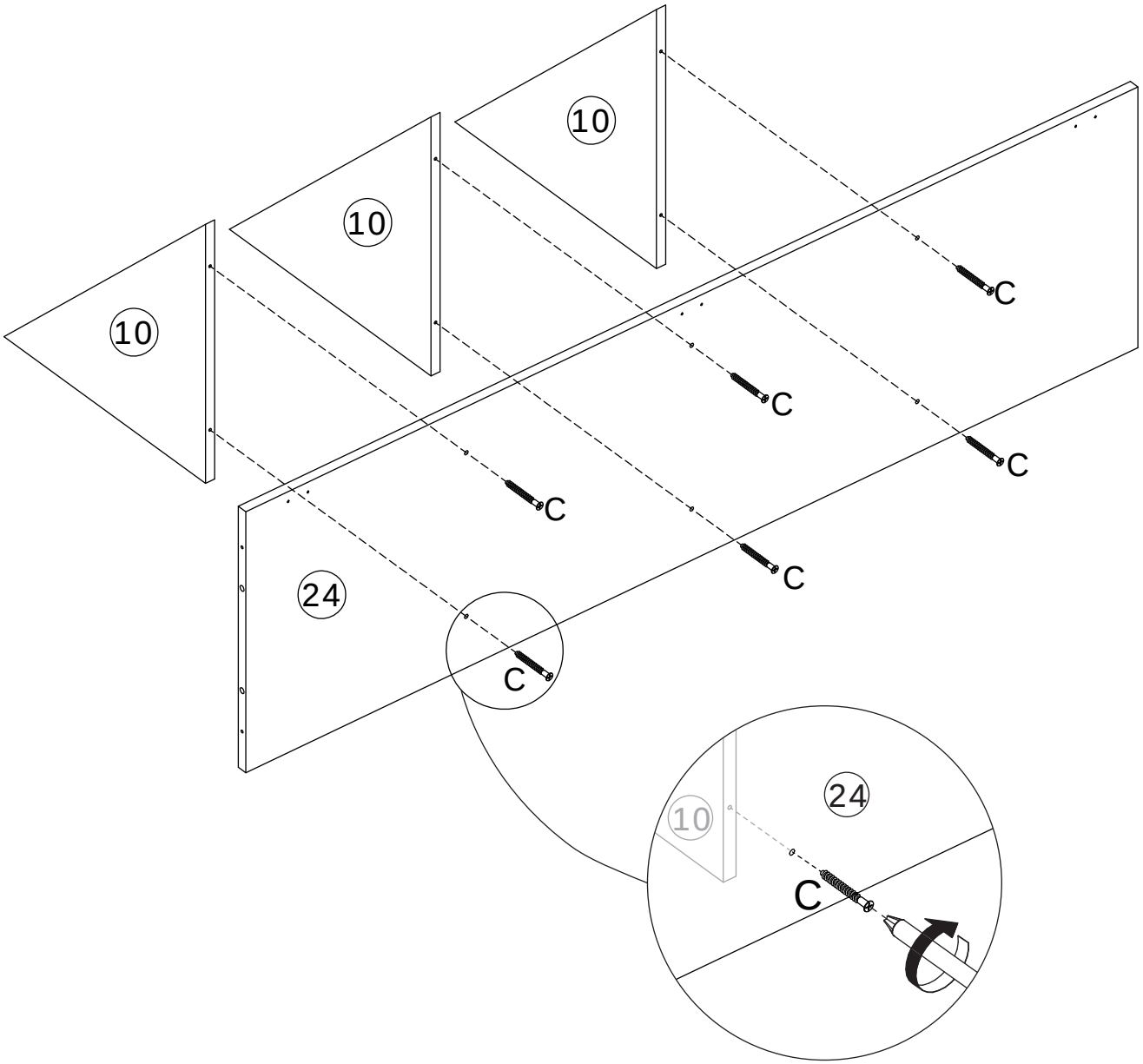

20

A x 8

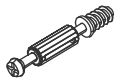

M5 x 42 mm

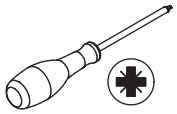

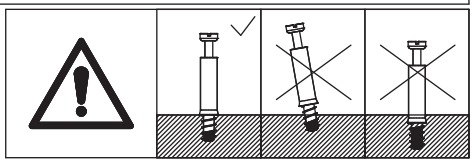

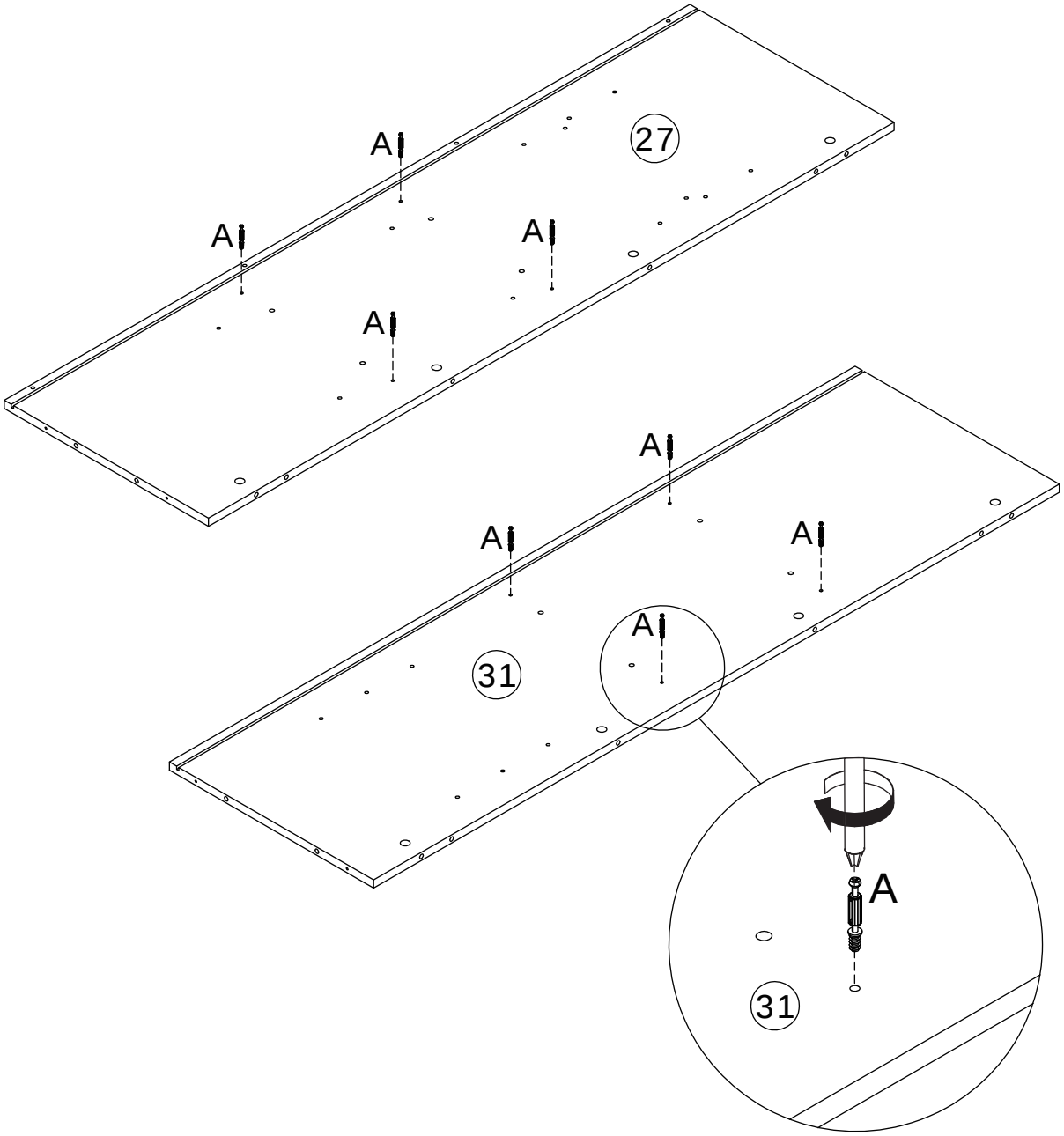

Screw eccentric rod (A) to plates 27 and 31.

21

C x 10	D x 2	
M5 x 40 mm	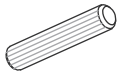 ∅8 x 40 mm	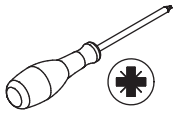

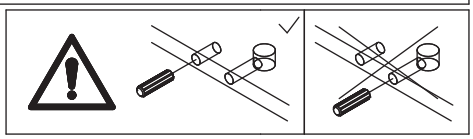

Connect plates 10 and 24 to plate 27 using wooden dowels (D), and secure them with screws (C).

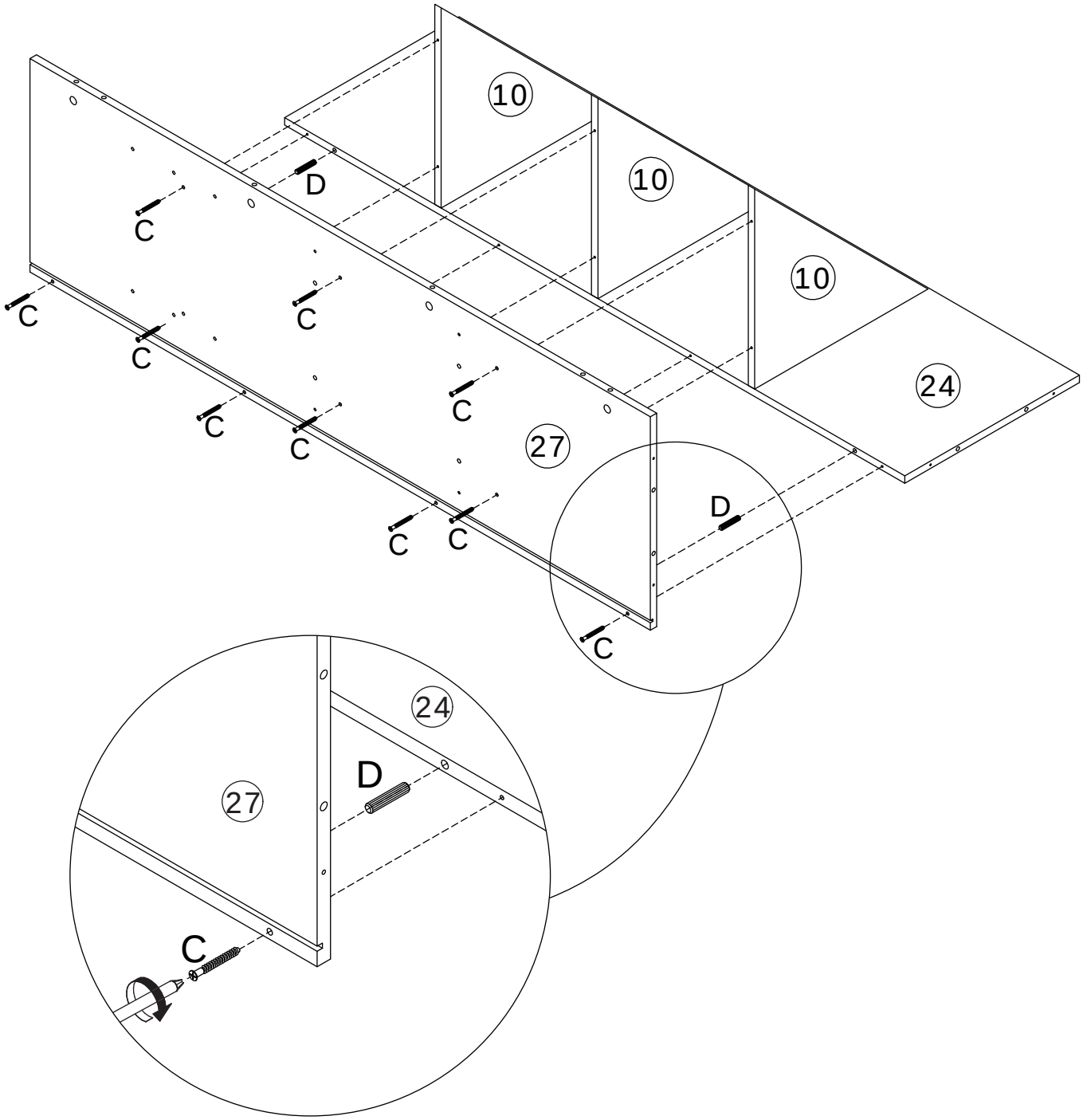

22

B x 2	D x 2	
	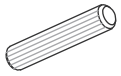	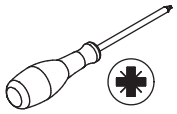
∅15 x 12 mm	∅8 x 40 mm	

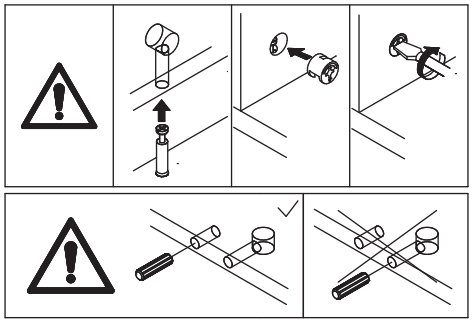

Connect plate 29 to plate 27 using wooden dowels (D), then insert the eccentric wheel (B) and tighten it by turning clockwise.

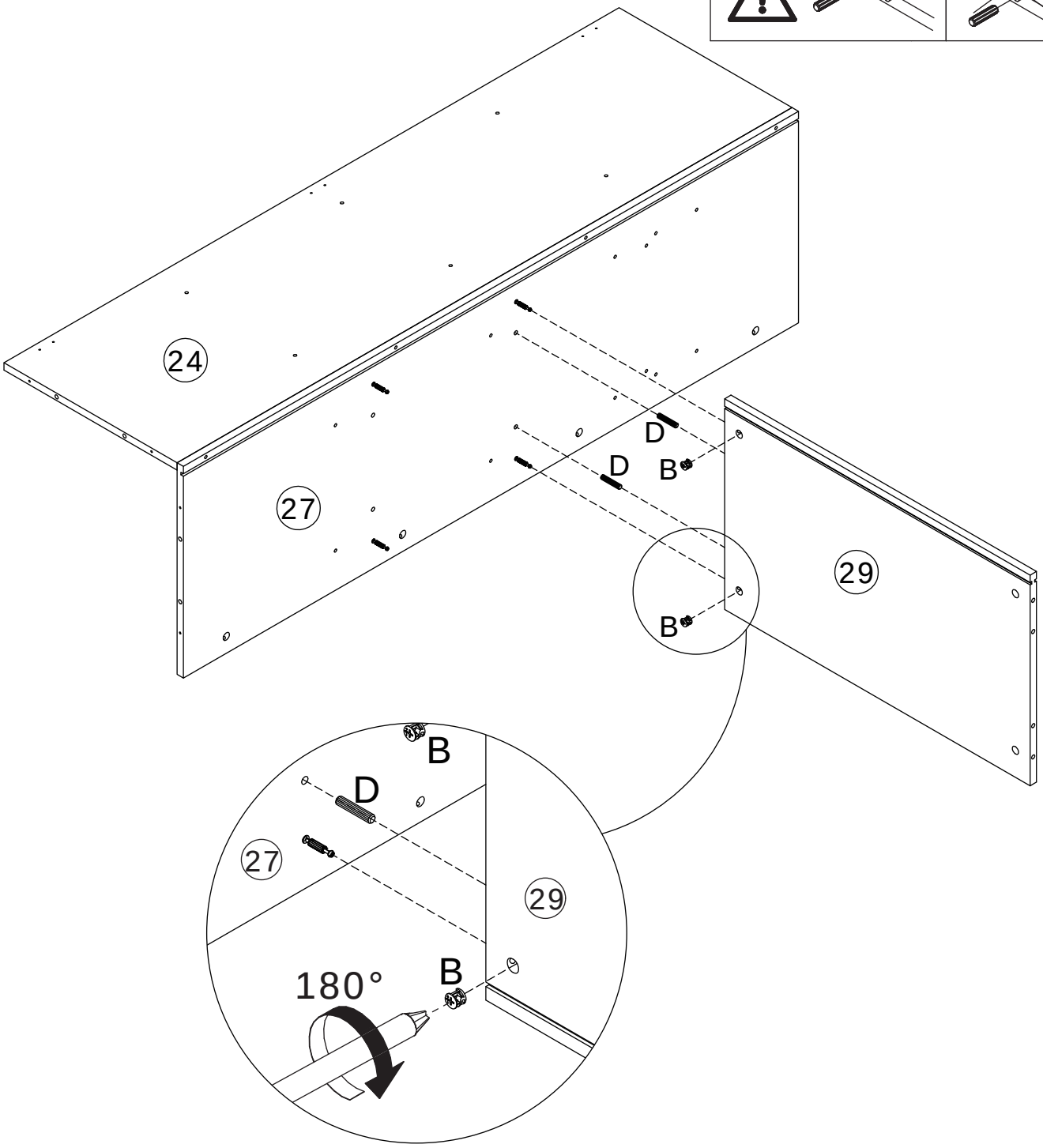

23

I x 8	Q x 4	
M3 x 16 mm	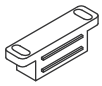	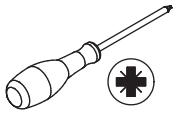

Secure door stopper (Q) to plate 32 using screws (I).

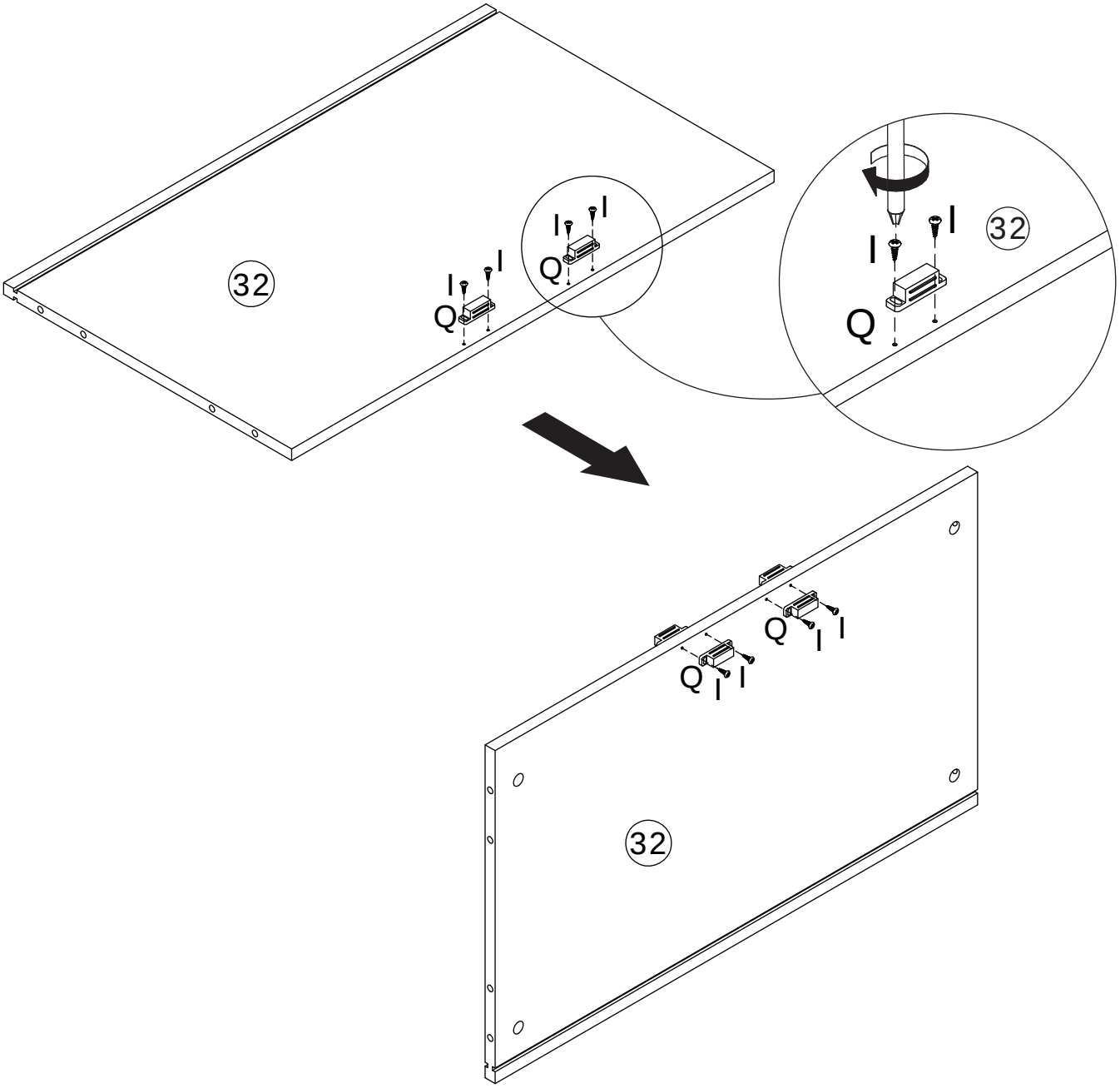

24

B x 2	D x 2	
	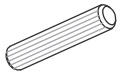	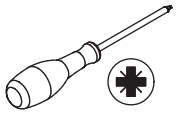
∅15 x 12 mm	∅8 x 40 mm	

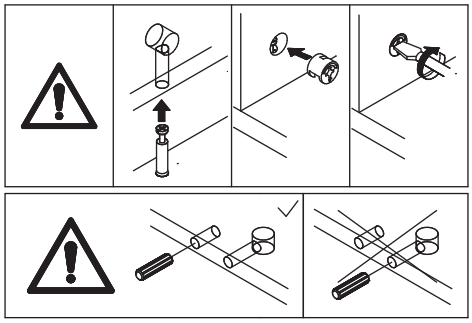

Connect plate 32 to plate 27 using wooden dowels (D), then insert the eccentric wheel (B) and tighten it clockwise.

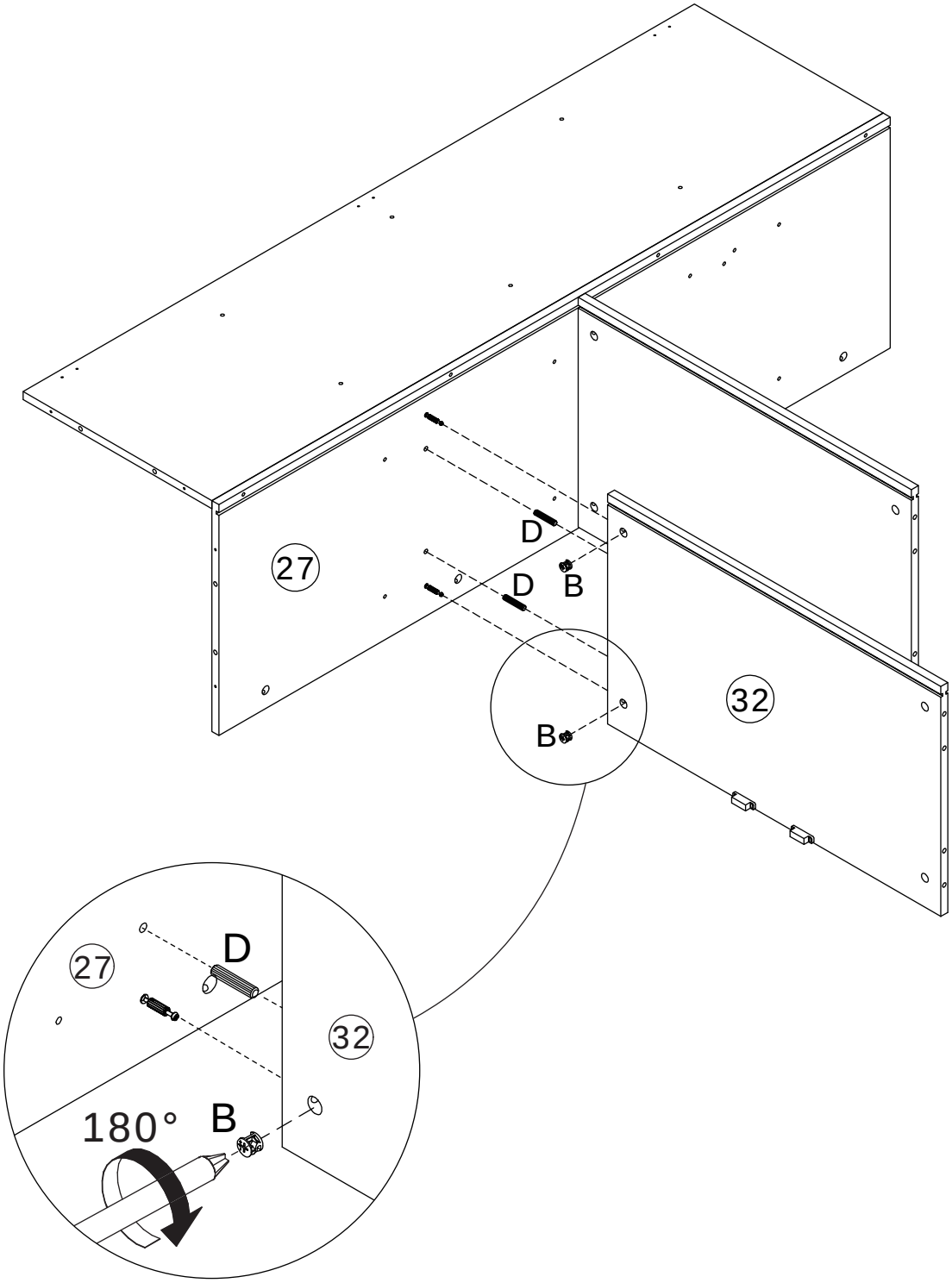

25

Insert plate 43 into the available slots.

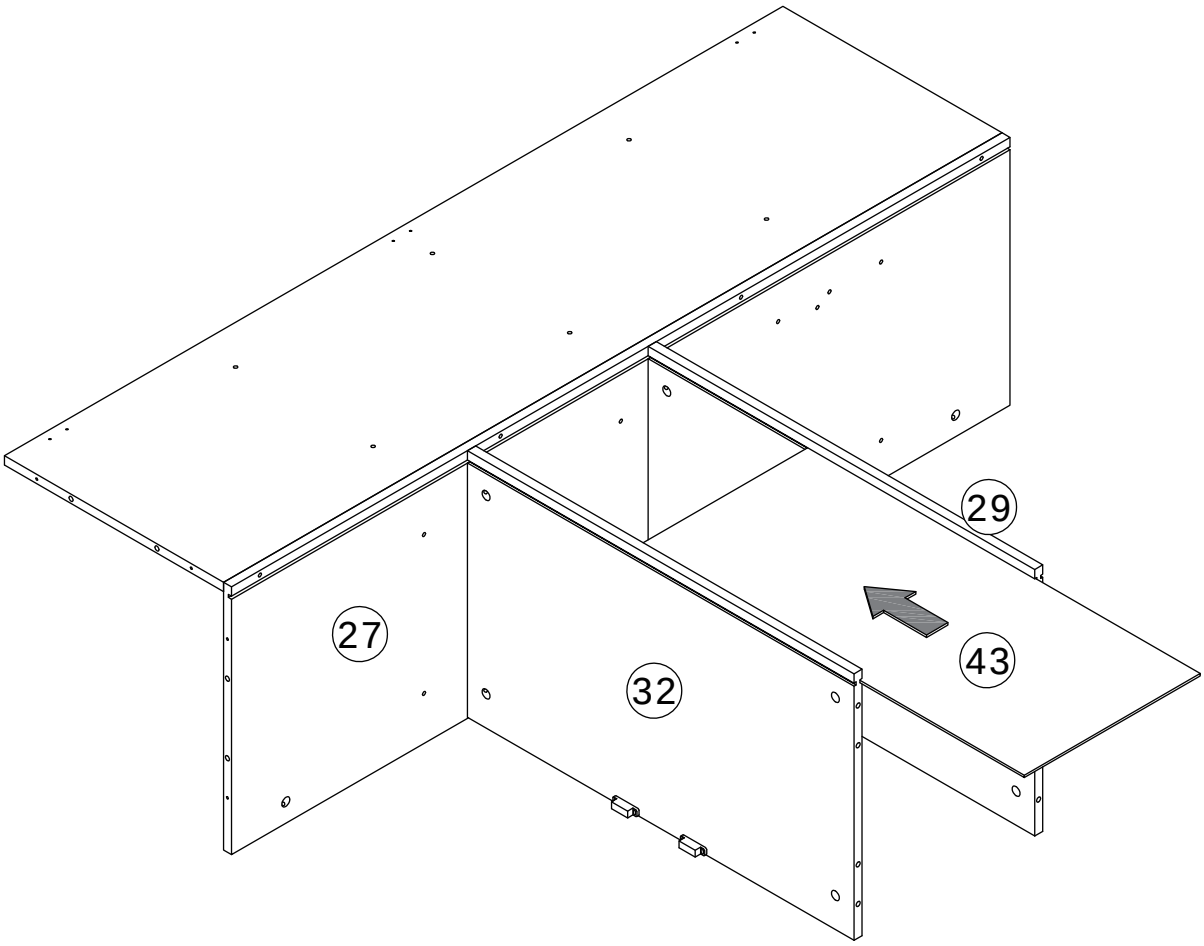

26

B x 2	D x 4	
	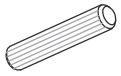	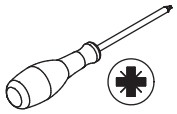
∅15 x 12 mm	∅8 x 40 mm	

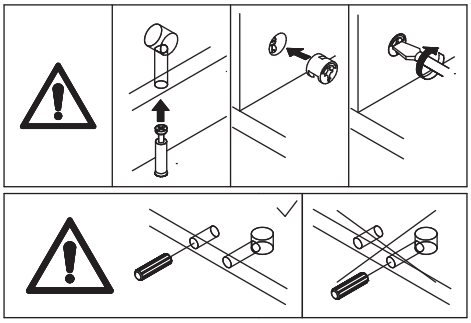

Connect plate 31 to plates 29 and 32 using wooden dowels (D), then insert the eccentric wheel (B) and tighten it by turning clockwise.

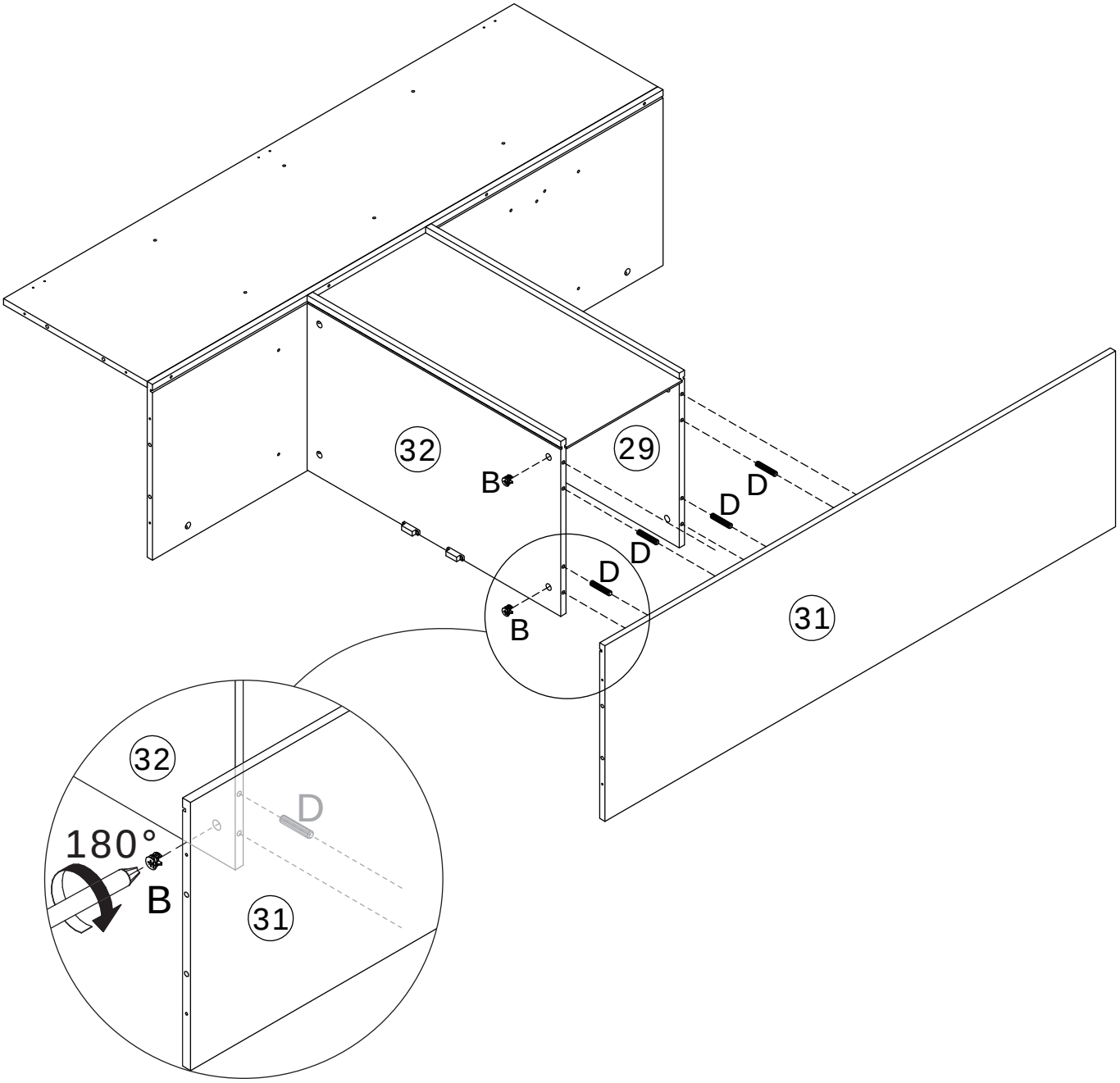

27

B x 2

∅15 x 12 mm

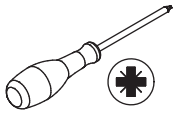

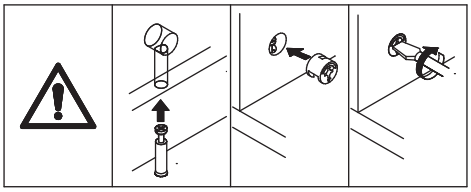

Insert the eccentric wheel (B) into plate 29 and tighten it clockwise.

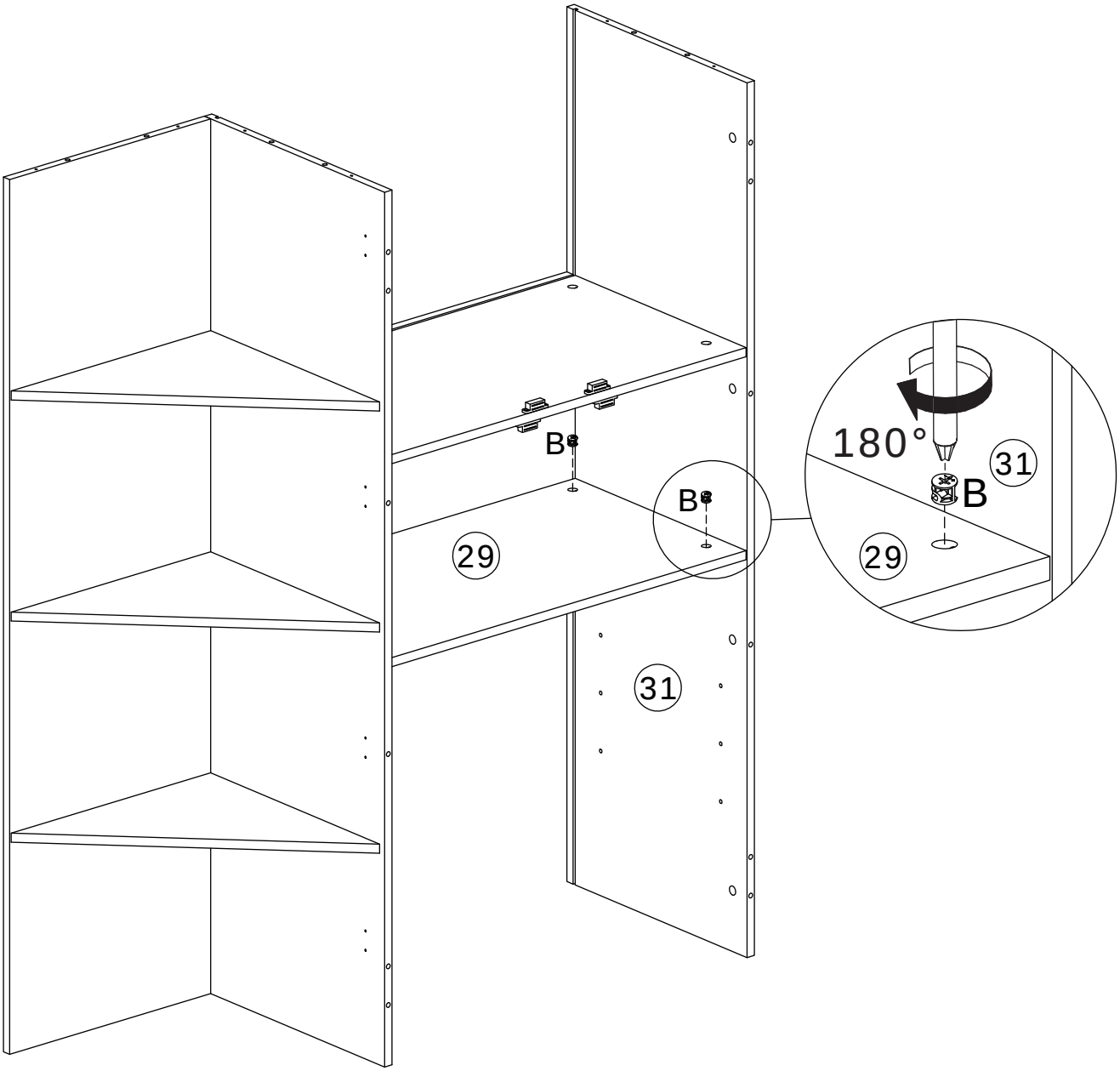

28

A x 4	E x 25	P x 5	
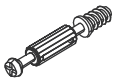 M5 x 42 mm	M3.5 x 14 mm		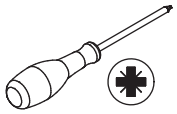

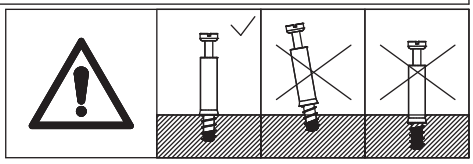

First screw eccentric rod (A) to plate 30, then secure hinges (P) to plate 30 using screws (E).

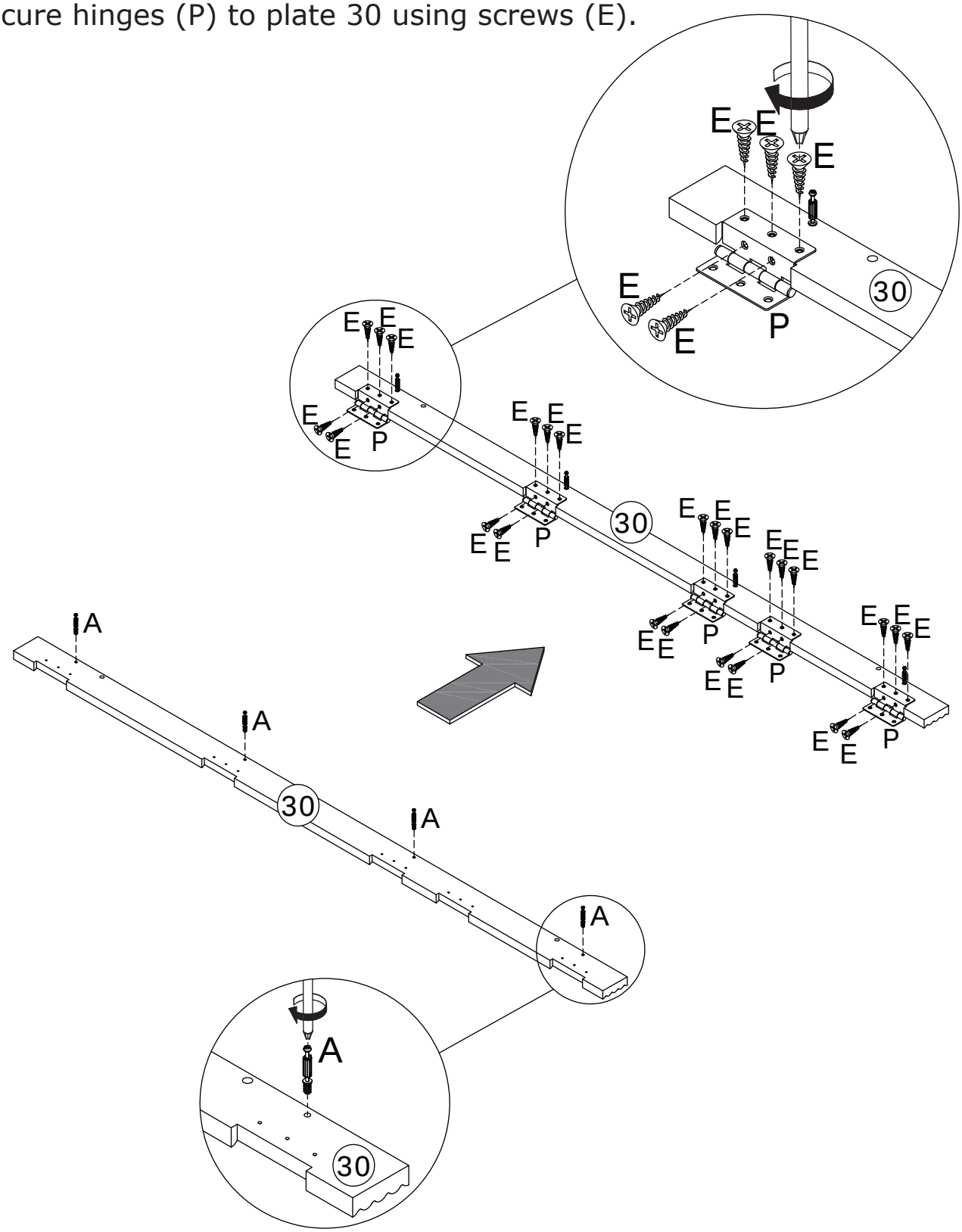

29

B x 4	D x 2	
	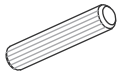	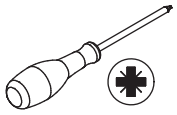
∅15 x 12 mm	∅8 x 40 mm	

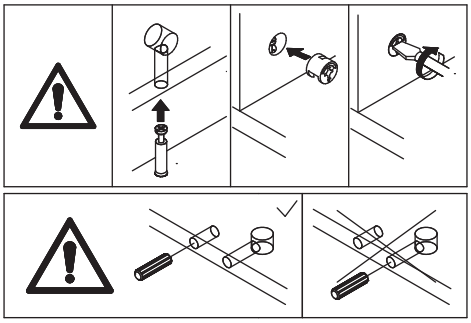

Connect plate 30 to plate 31 using wooden dowels (D), then insert the eccentric wheel (B) and tighten it by turning clockwise.

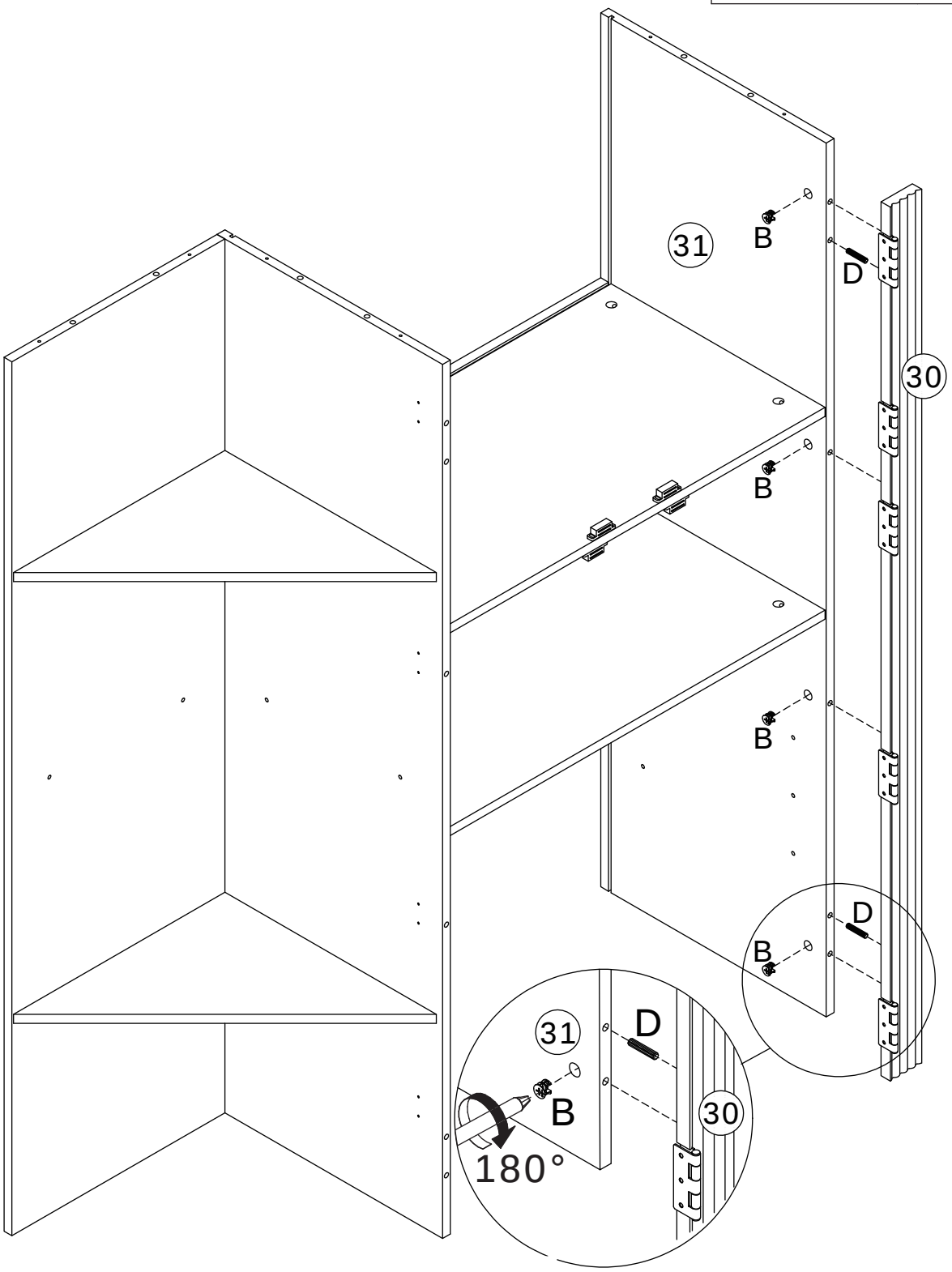

30

A x 4	E x 25	P x 5	
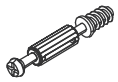 M5 x 42 mm	M3.5 x 14 mm		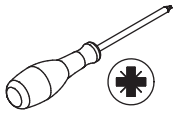

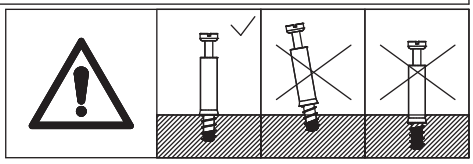

First screw eccentric rod (A) to plate 28, then secure hinges (P) to plate 28 using screws (E).

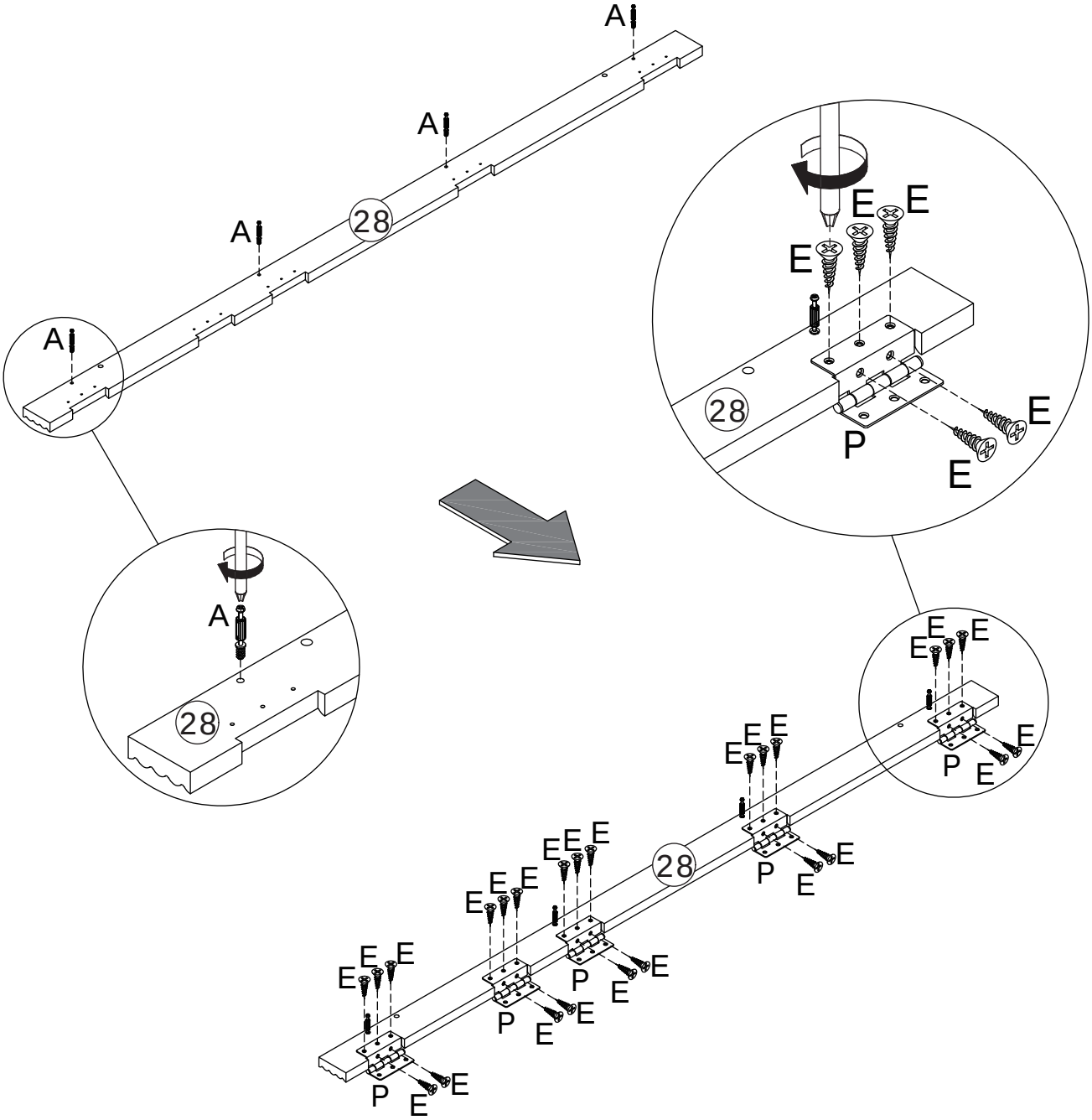

31

B x 4	D x 2	
	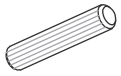	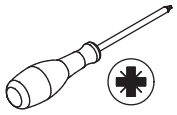
∅15 x 12 mm	∅8 x 40 mm	

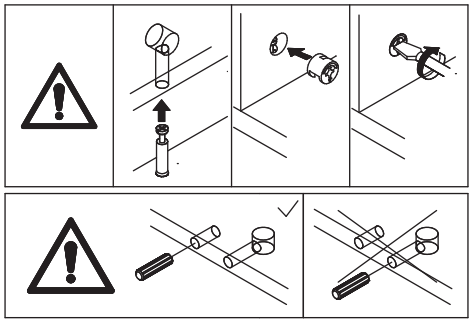

Connect plate 28 to plate 27 using wooden dowels (D), then insert the eccentric wheel (B) and tighten it by turning clockwise.

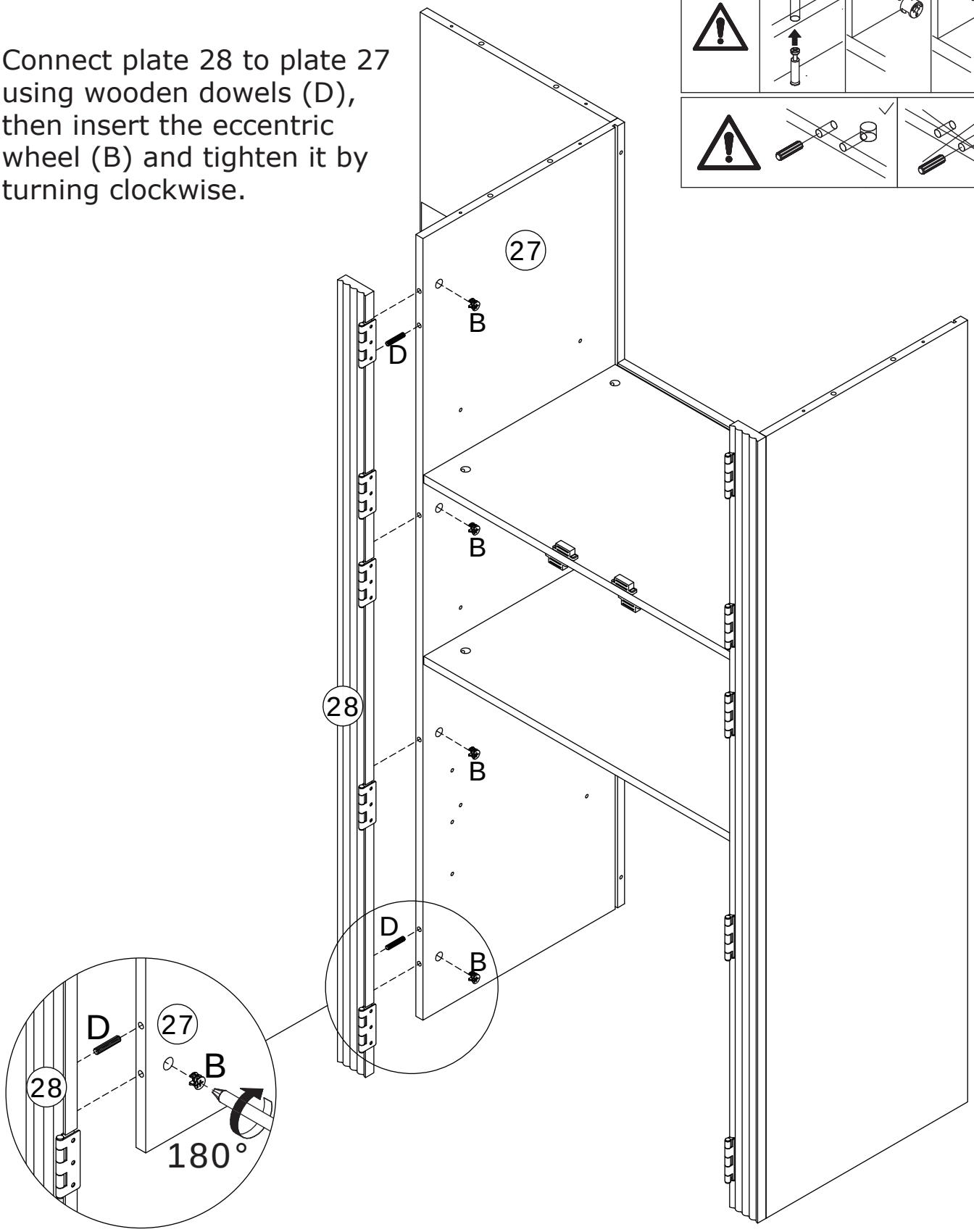

32

A x 2	E x 8	
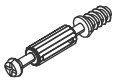		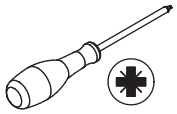
M5 x 42 mm	M3.5 x 14 mm	

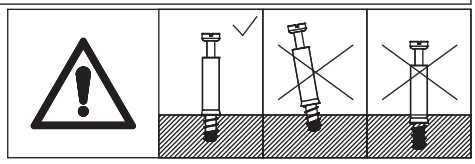

First screw eccentric rod (A) to plate 26, then secure part 40 to plate 26 using screws (E).

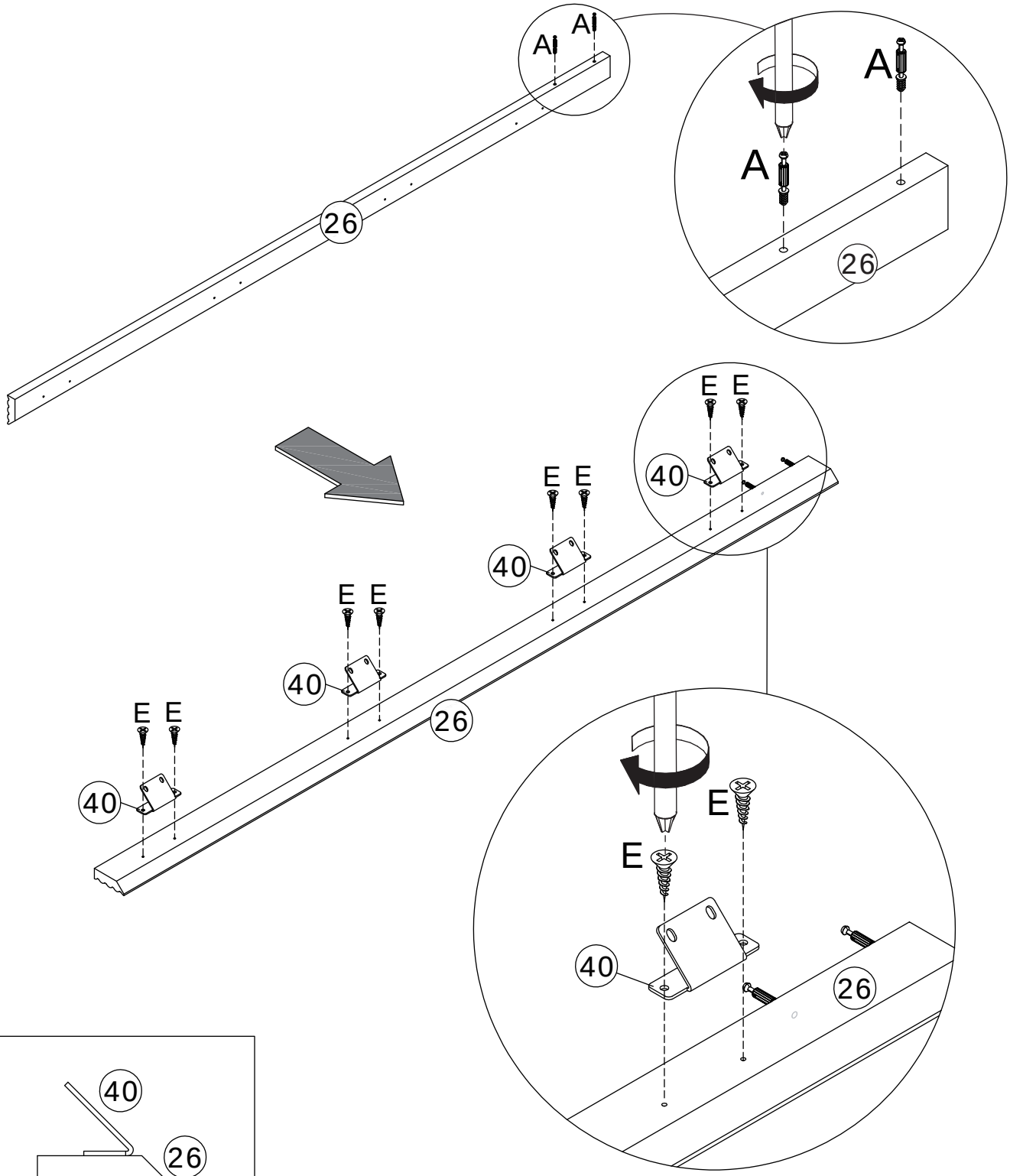

33

A x 2	E x 6	
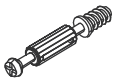 M5 x 42 mm	M3.5 x 14 mm	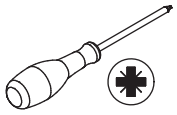

First secure part 41 to plate 23 using screws (E), then screw eccentric rod (A) to plate 23.

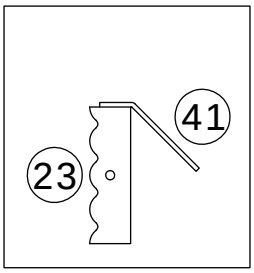

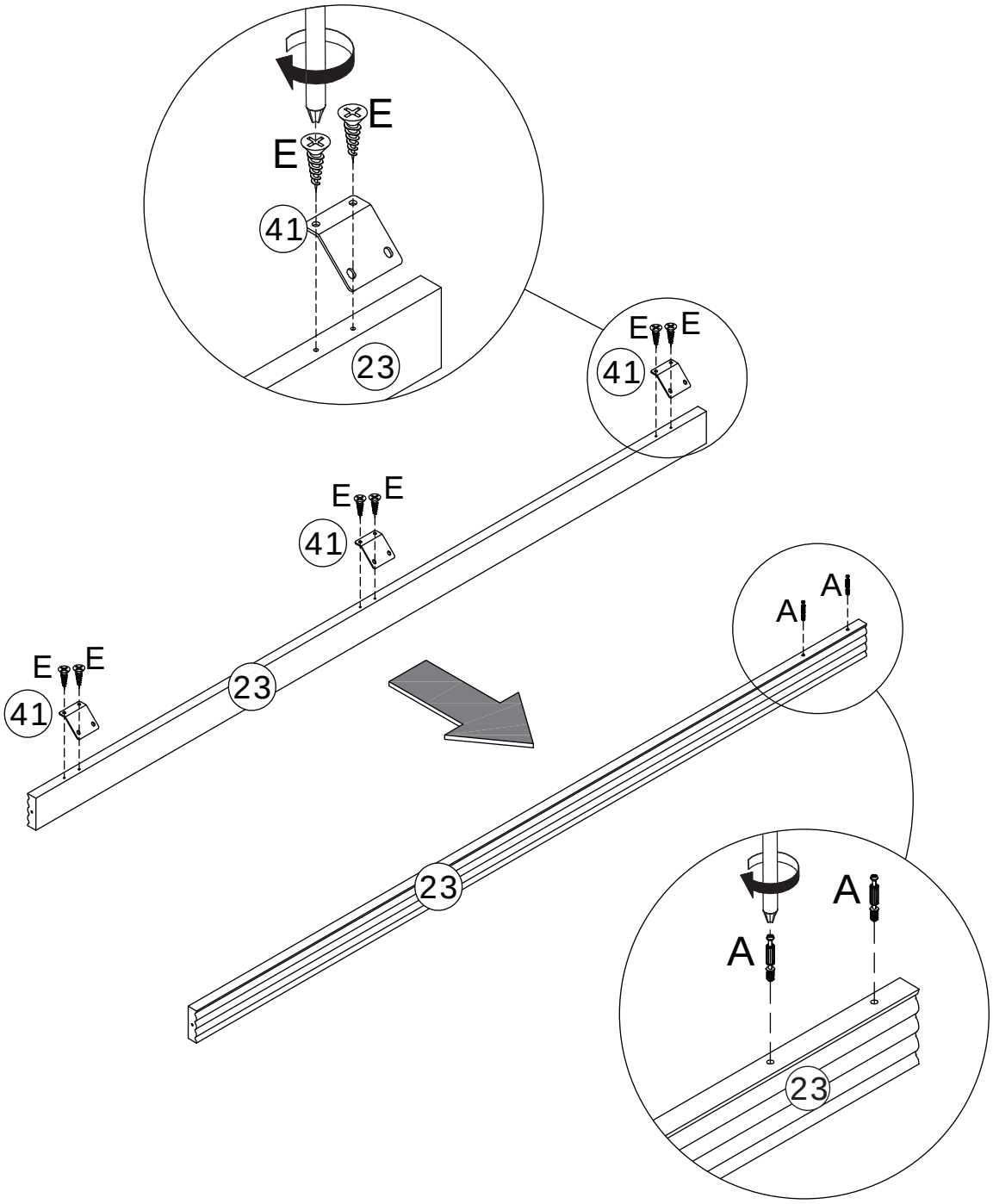

34

B x 4

∅15 x 12 mm

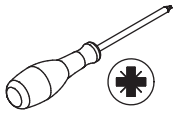

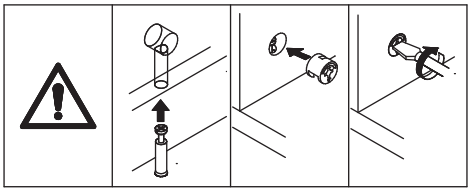

Connect plates 23 and 26 to plate 25, then insert the eccentric wheel (B) and tighten it by turning clockwise.

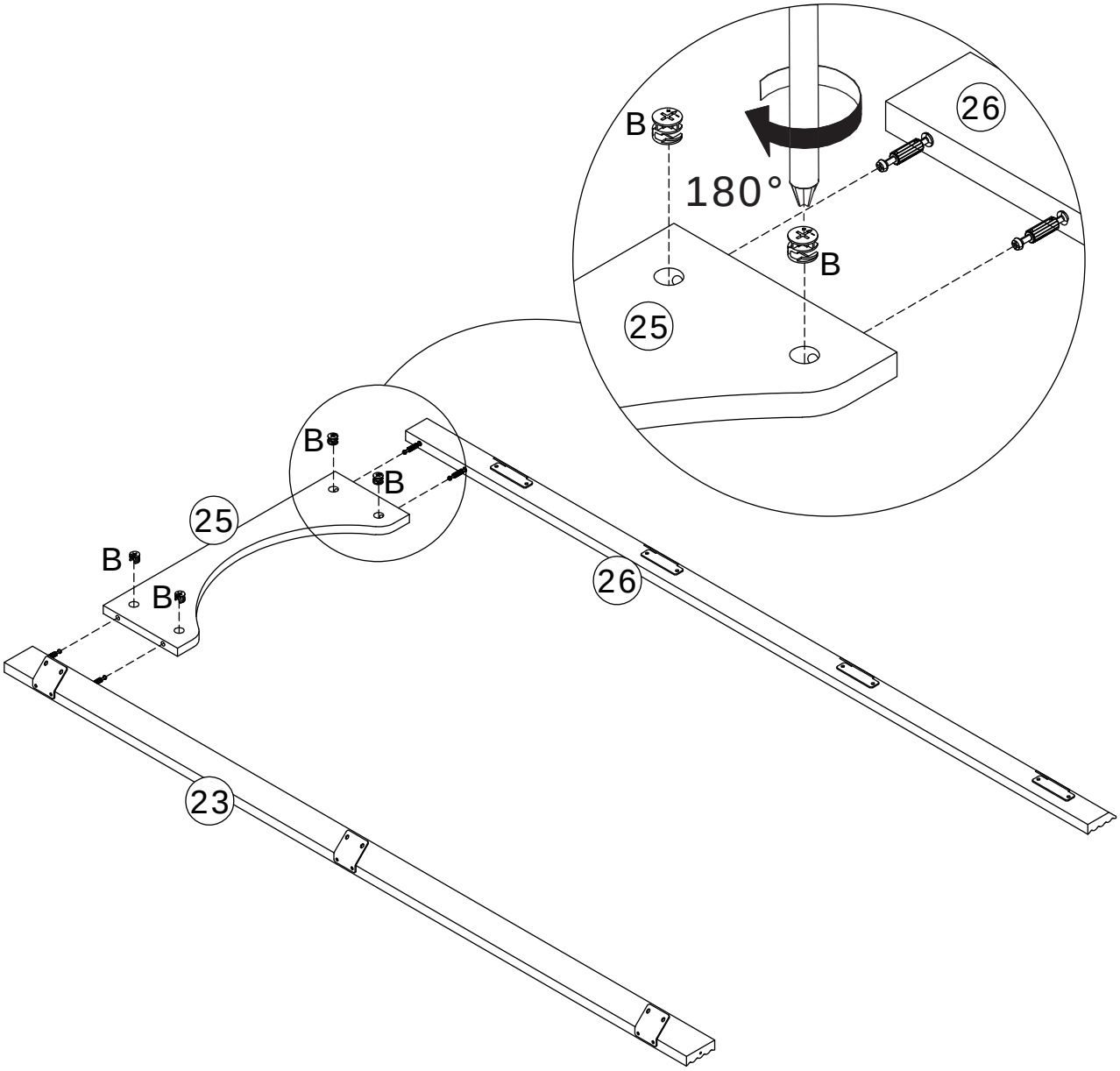

35

E x 14

M3.5 x 14 mm

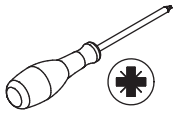

Secure part 41 to plate 24 using screws (E).
Secure part 40 to plate 27 using screws (E).

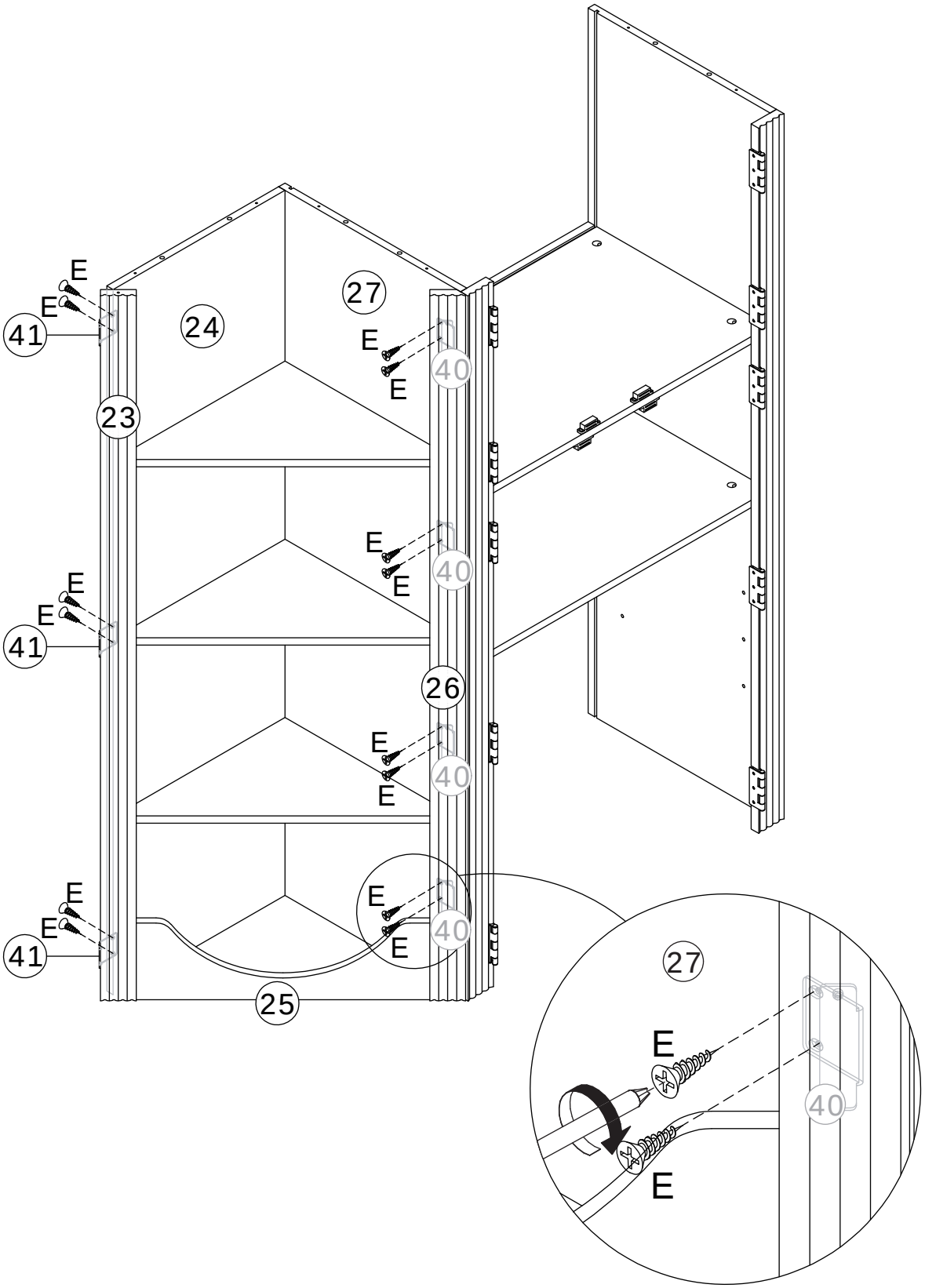

36

Insert plate 44 into the available slots.

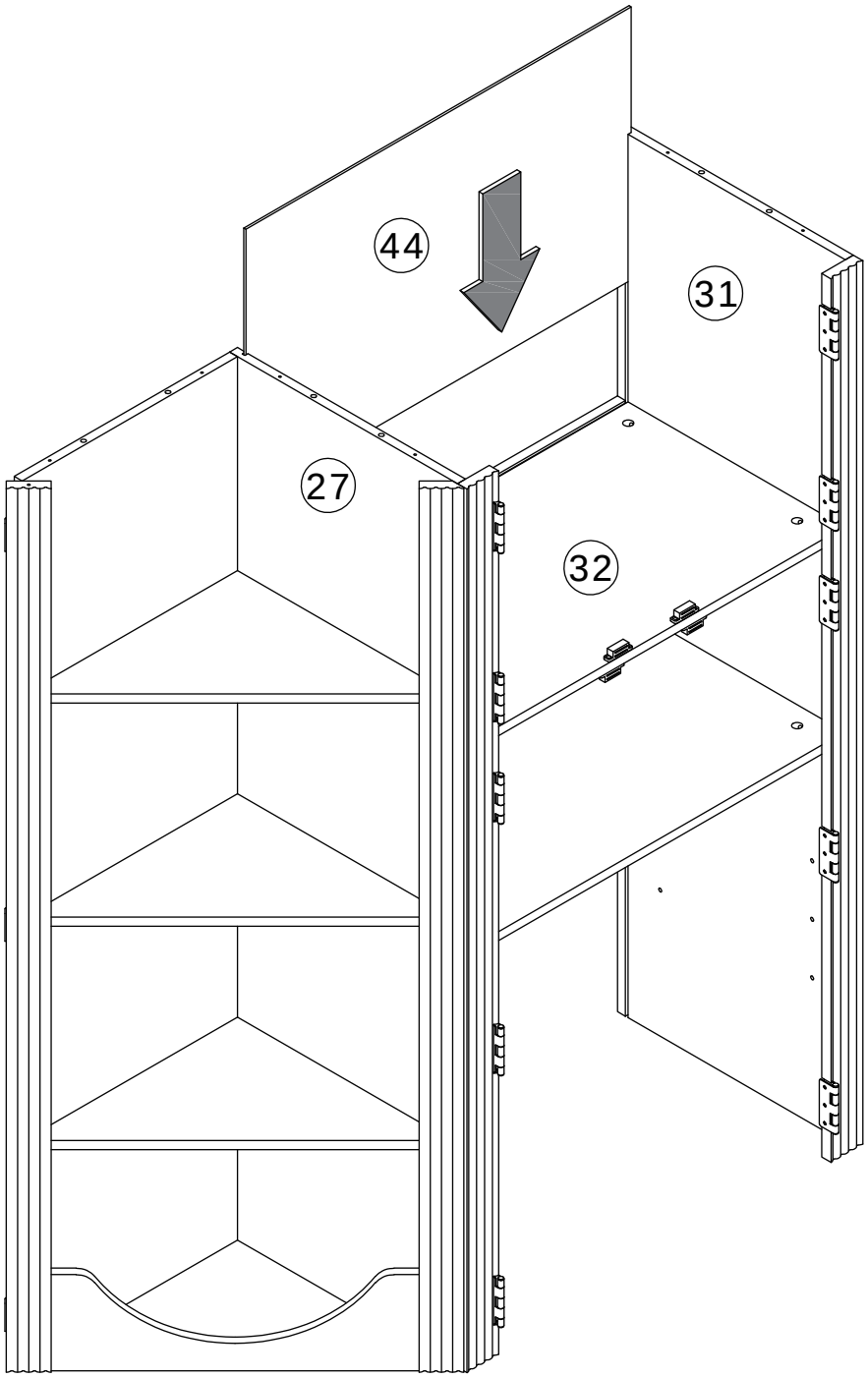

37

C x 7	D x 6	
M5 x 40 mm	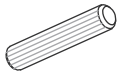 ∅8 x 40 mm	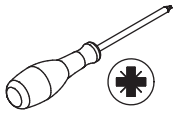

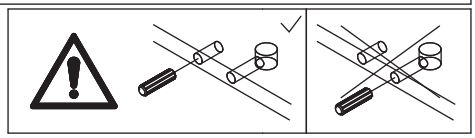

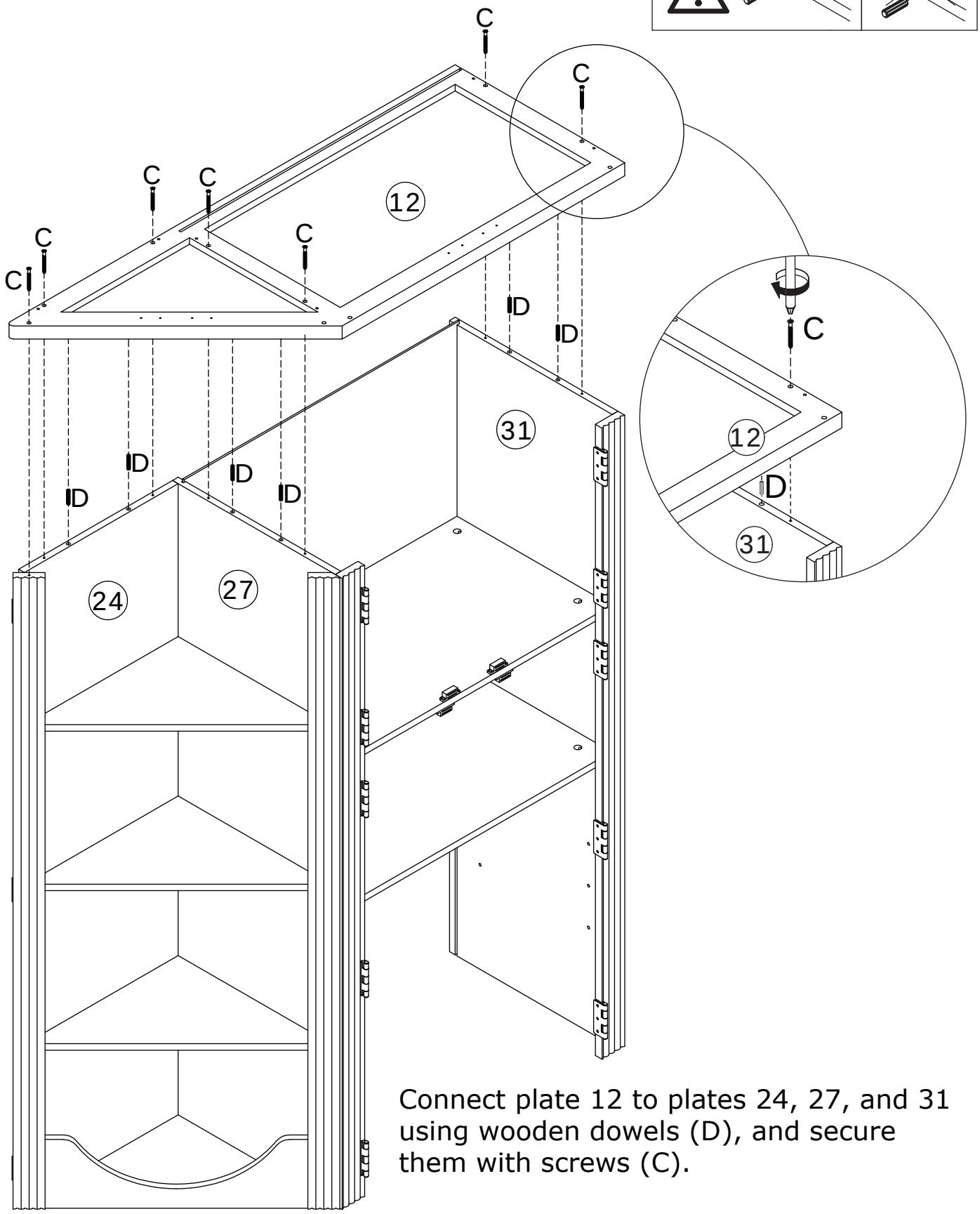

Connect plate 12 to plates 24, 27, and 31 using wooden dowels (D), and secure them with screws (C).

38

Insert plate 33 into the available slots.

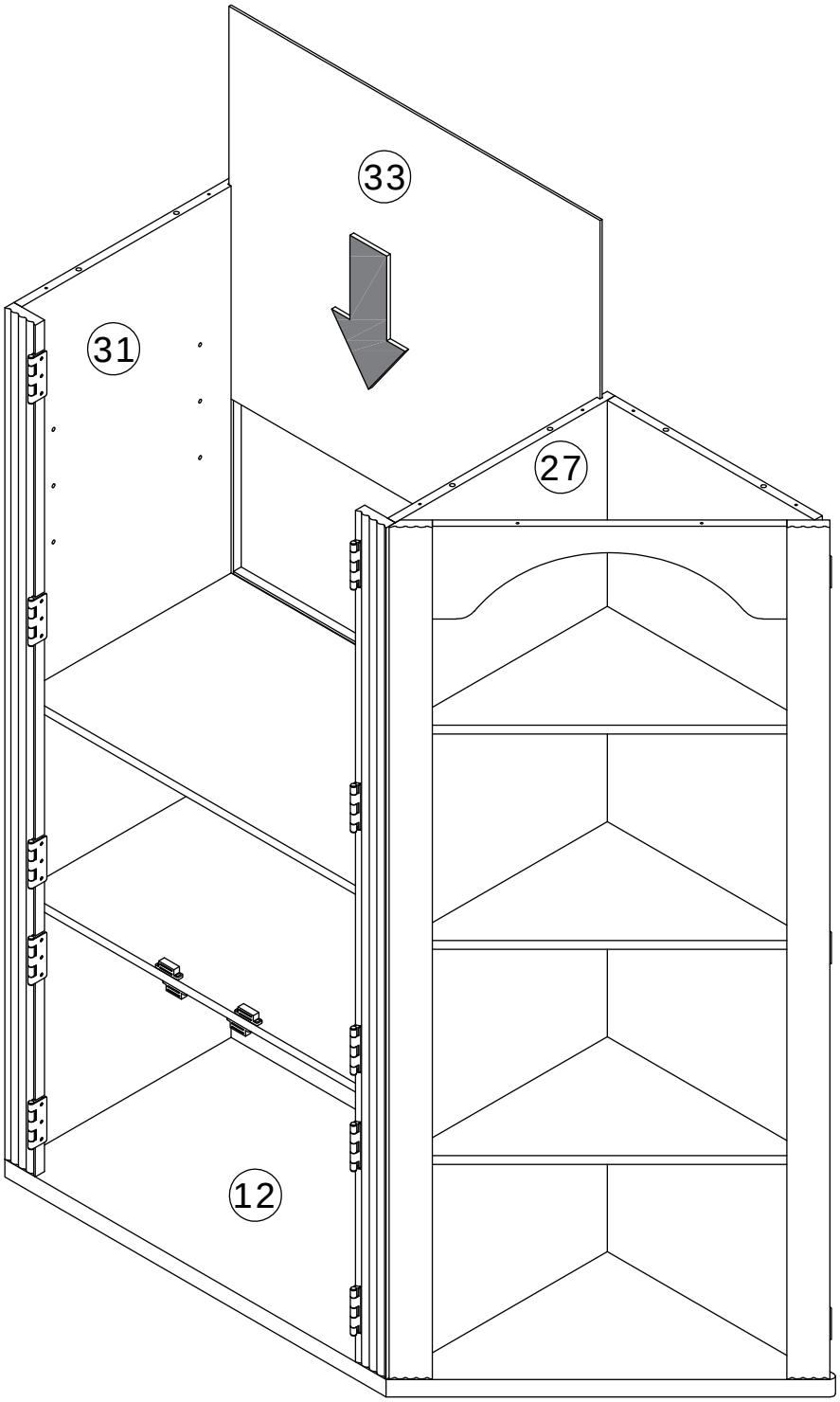

39

A x 2

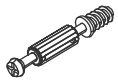

M5 x 42 mm

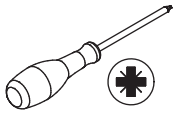

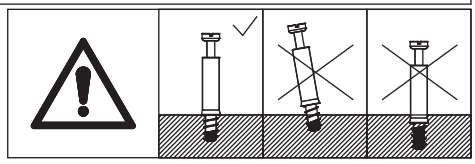

Screw eccentric rod (A) on plate 34.

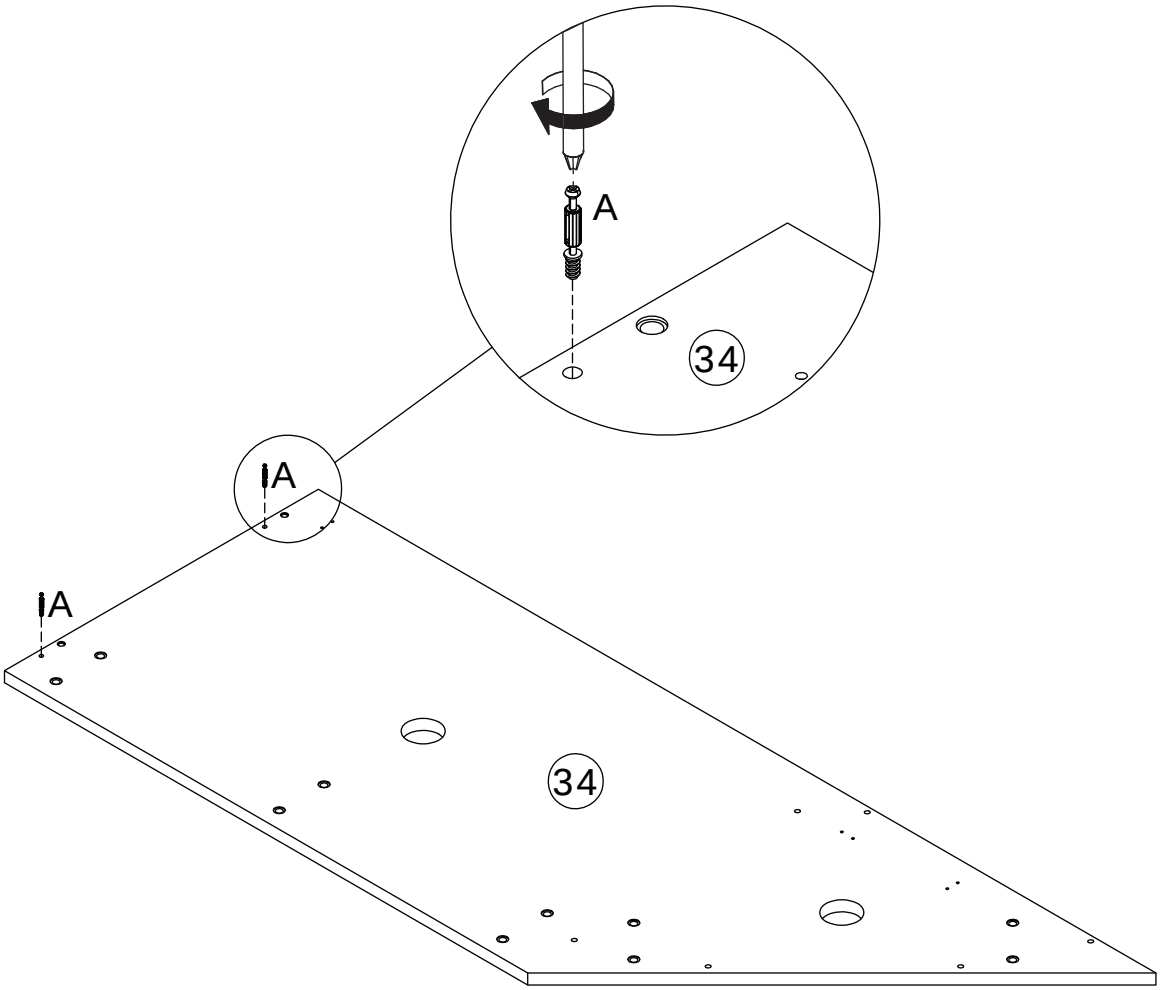

40

C x 8	D x 6	
	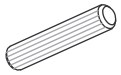	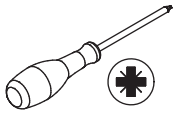
M5 x 40 mm	∅8 x 40 mm	

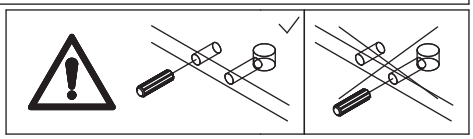

Connect plate 34 to plates 24, 25, 27, and 31 using wooden dowels (D), and secure them with screws (C).

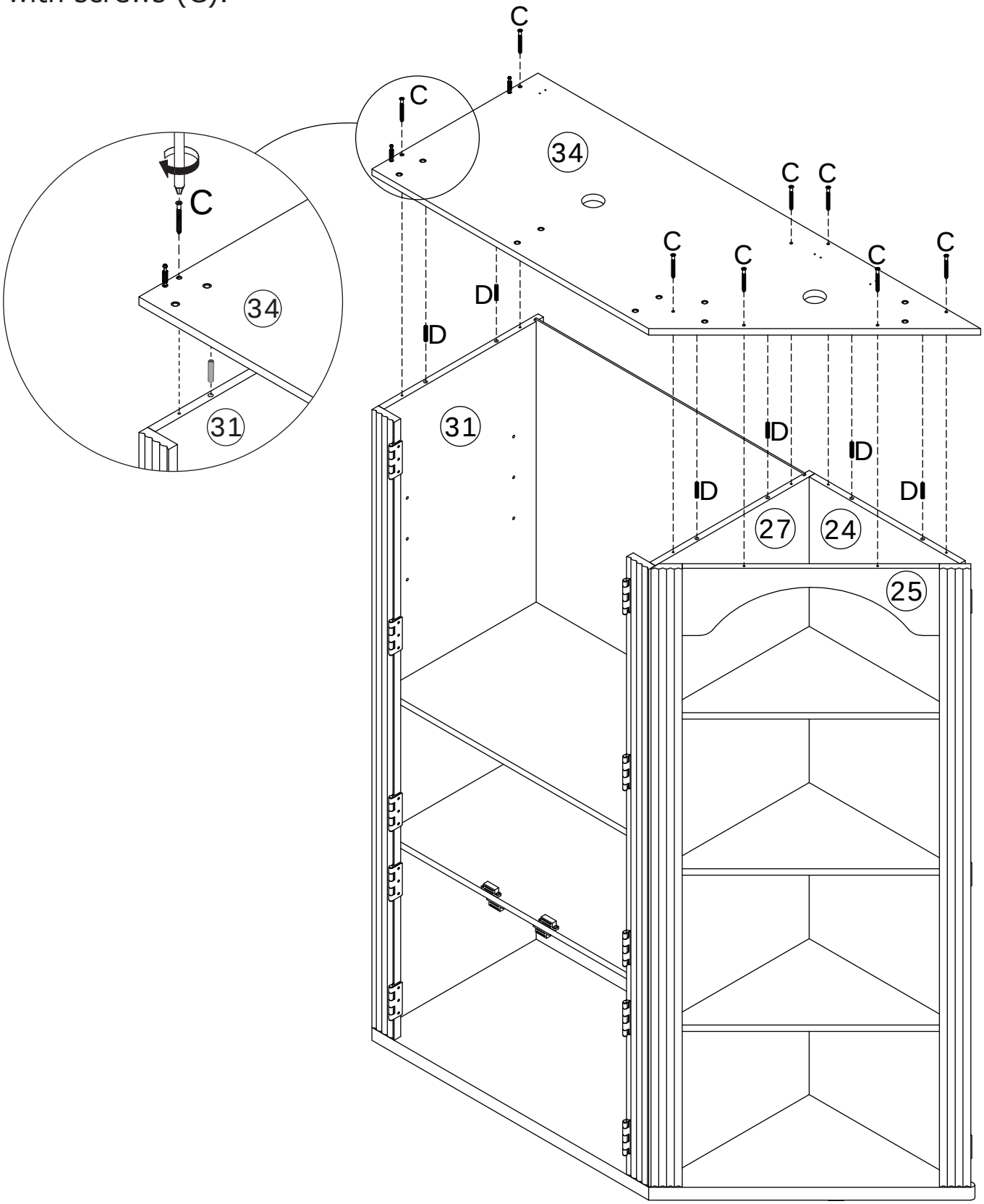

41

B x 2

∅15 x 12 mm

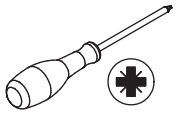

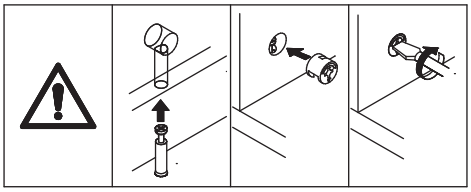

Connect plate 35 to plate 34, then insert the eccentric wheel (B) and tighten it clockwise.

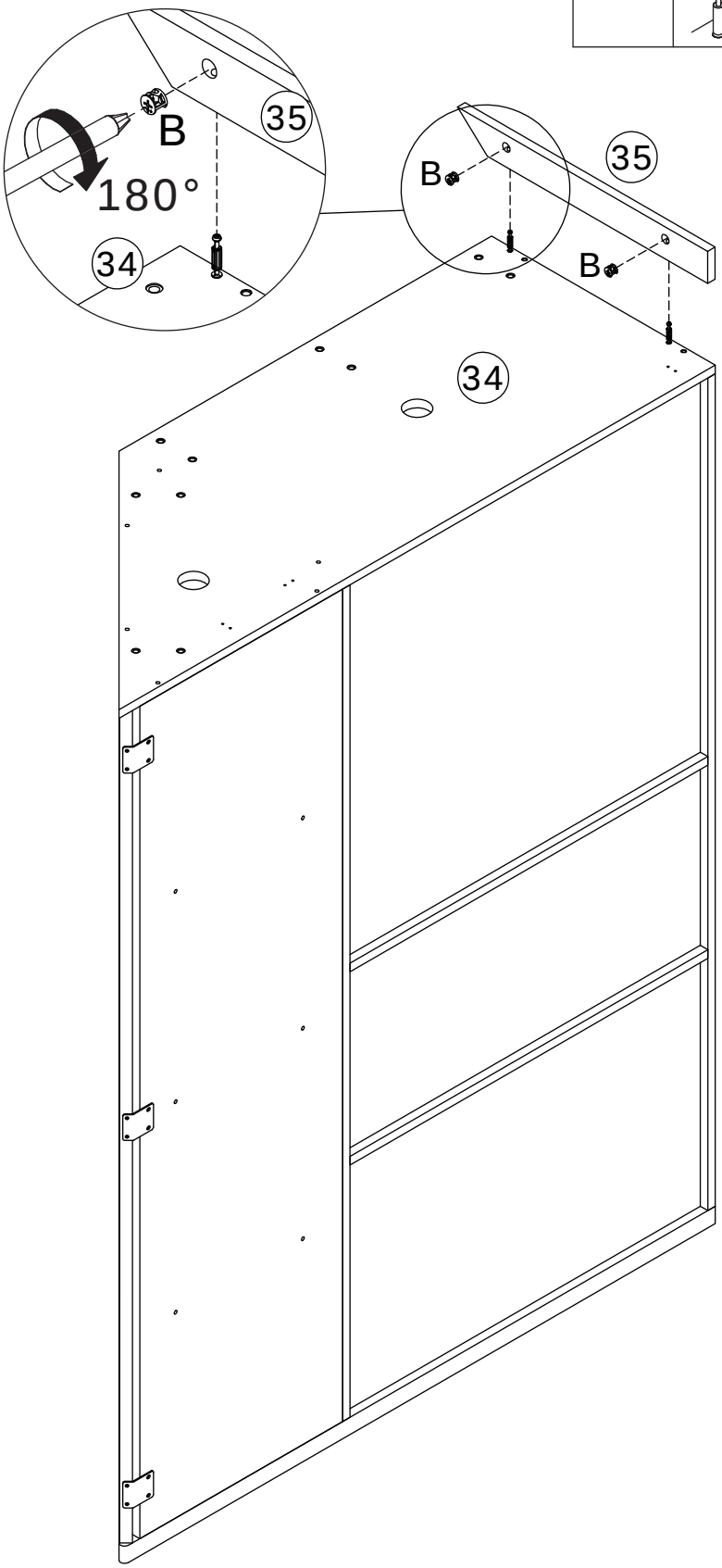

42

F x 10	x 1	
M6 x 12 mm	#4	

Secure part 38 to plate 34 using screws (F).

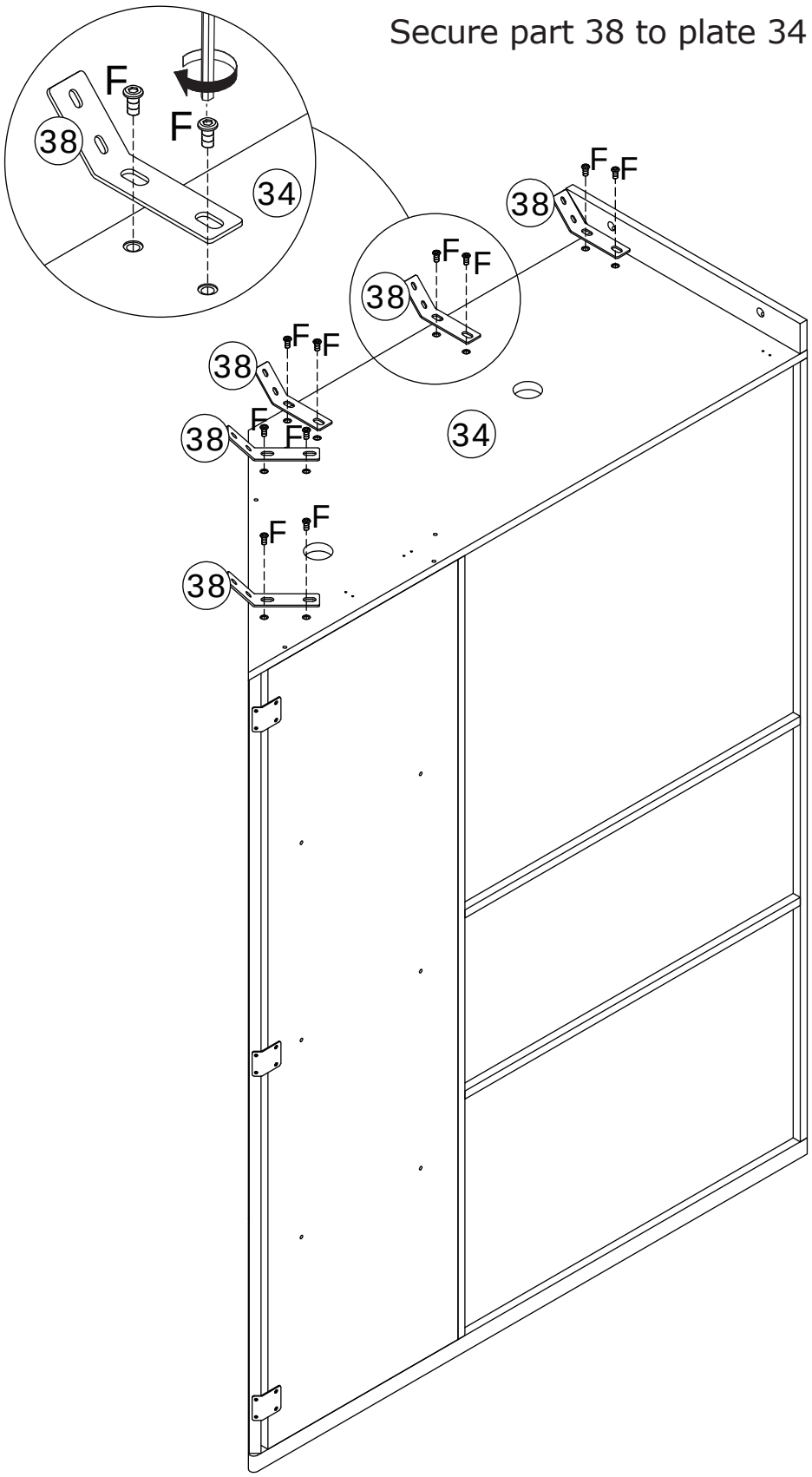

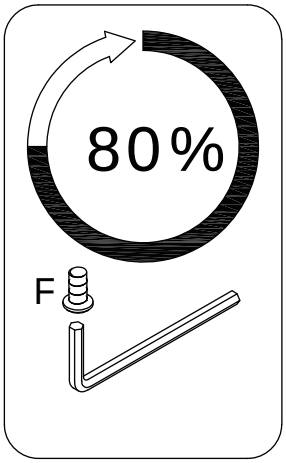

43

E x 6

M3.5 x 14 mm

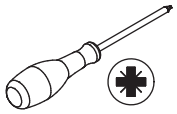

Secure part 38 to plate 37 using screws (E).

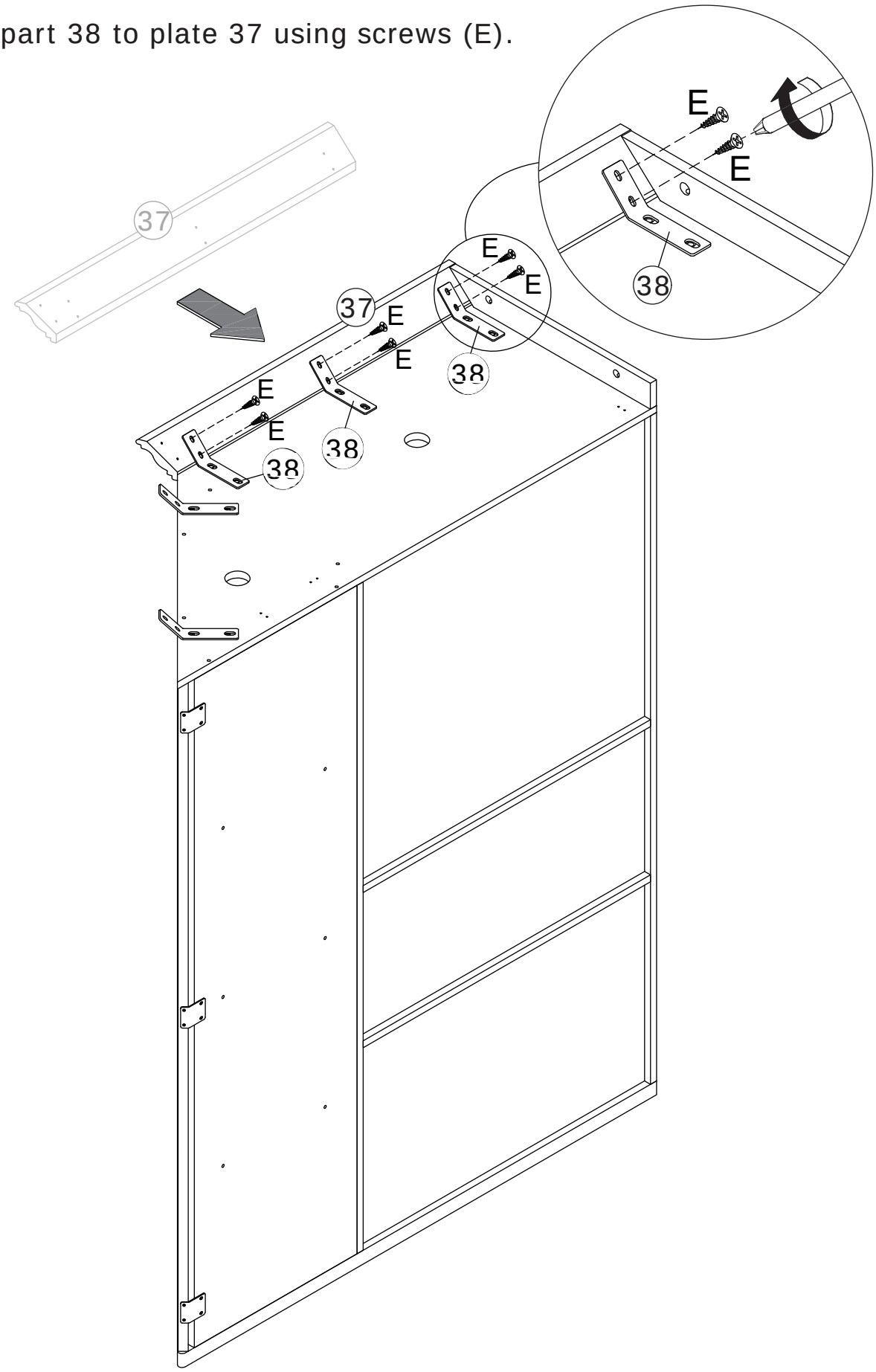

44

E x 4

M3.5 x 14 mm

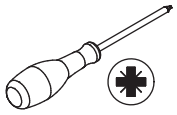

Secure part 38 to plate 36 using screws (E).

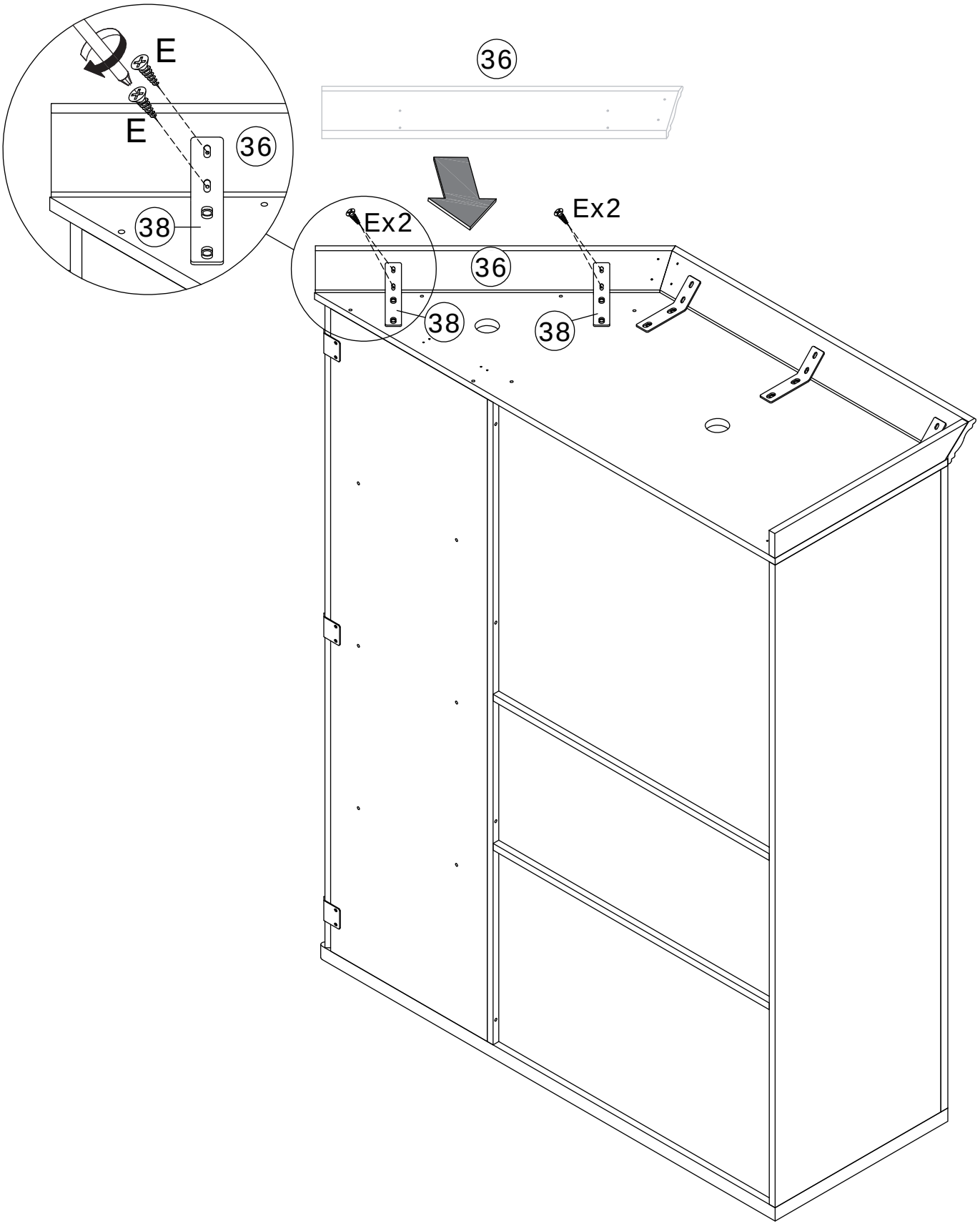

45

E x 4

M3.5 x 14 mm

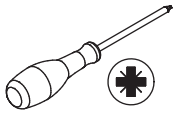

Secure part 39 to plates 36 and 37 using screws (E).

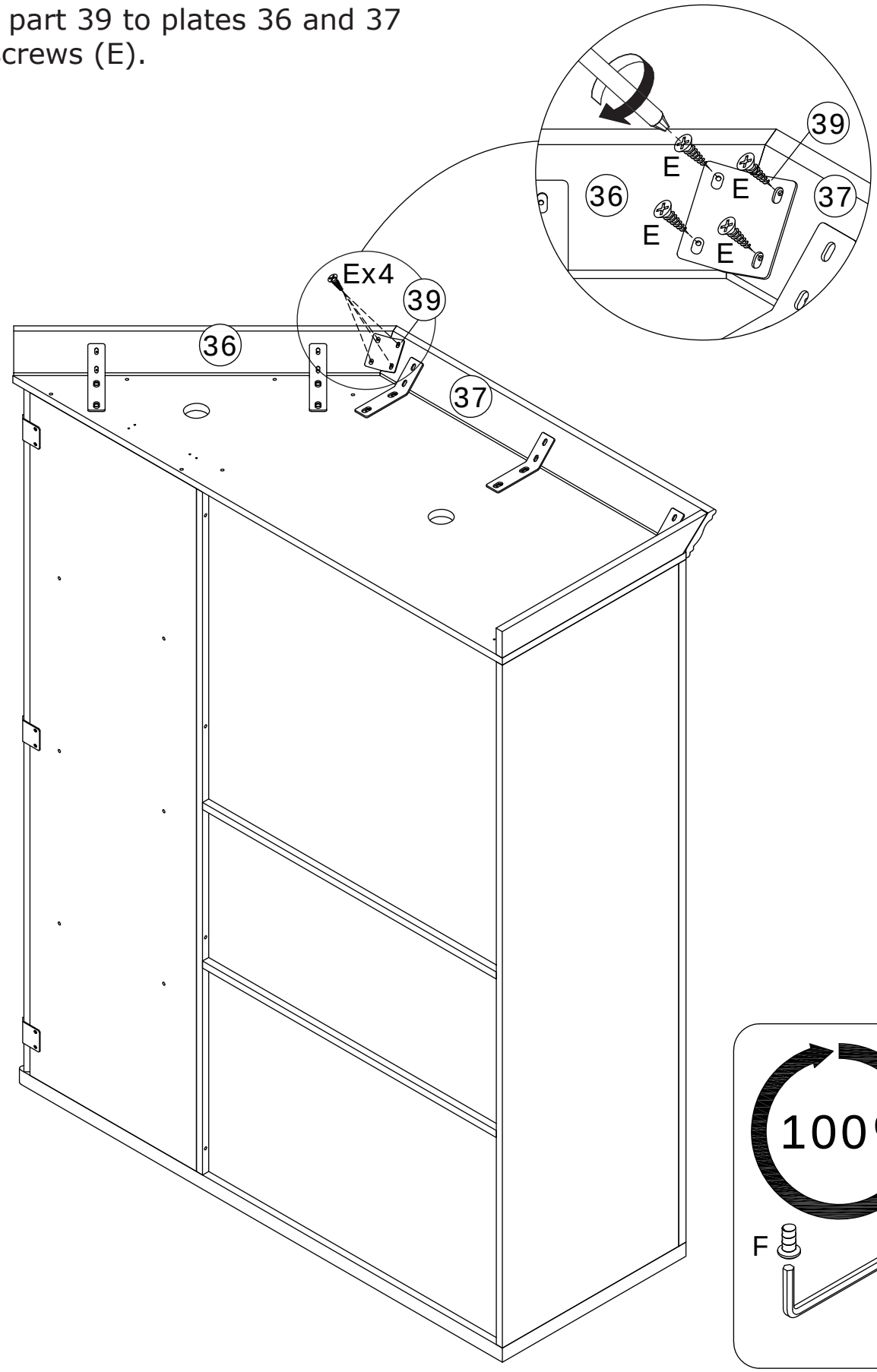

46

E x 4	O x 2	
M3.5 x 14 mm		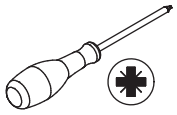

Secure bracket (O) to plate 34 using screws (E).

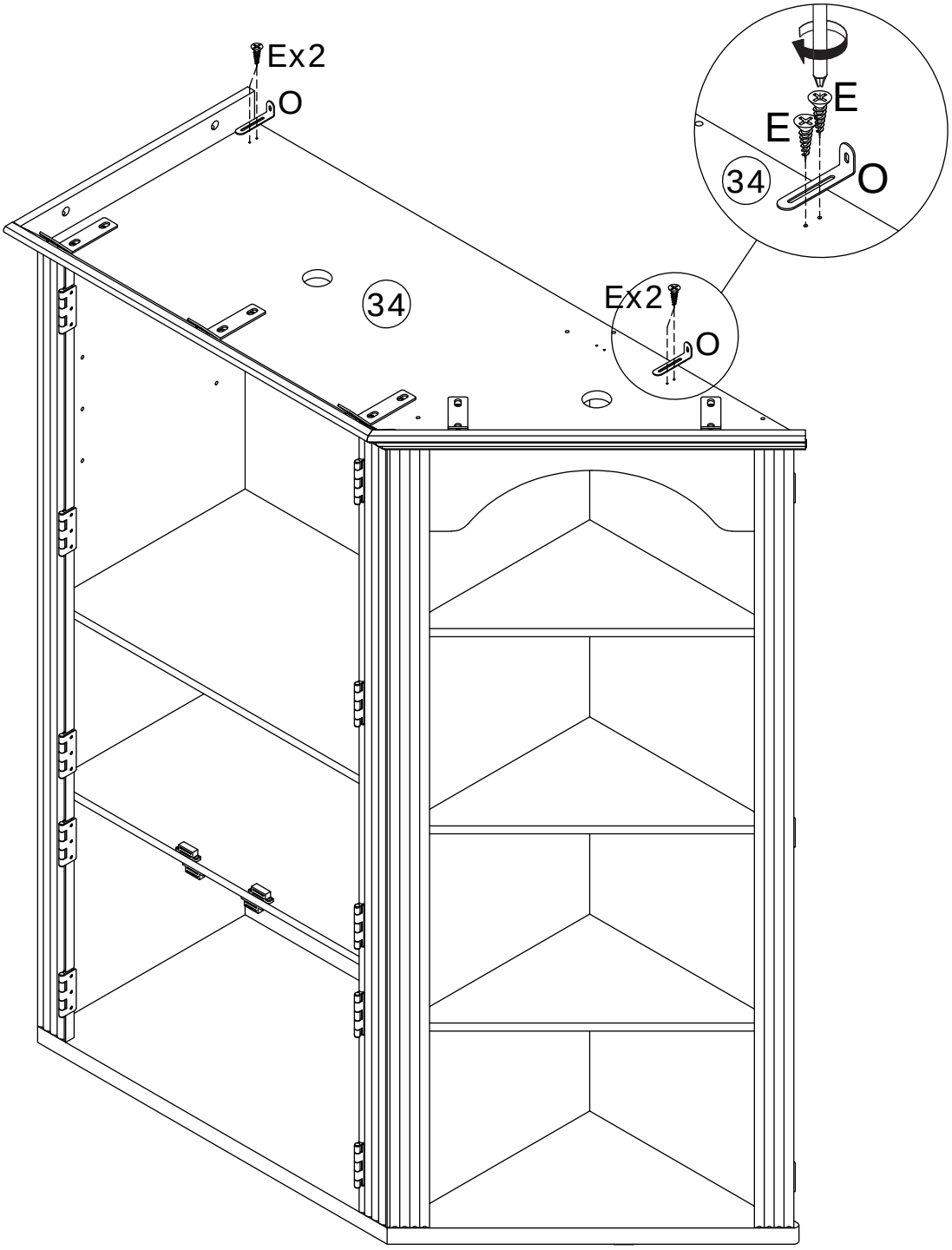

47

A x 6	I x 8	Q x 4	
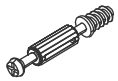 M5 x 42 mm	M3 x 16 mm	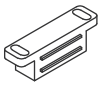	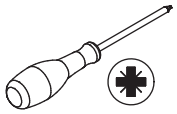

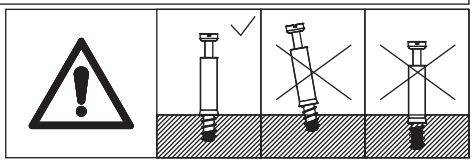

Secure door stopper (Q) to plate 12 using screws (I).
Screw eccentric rod (A) to plate 12.

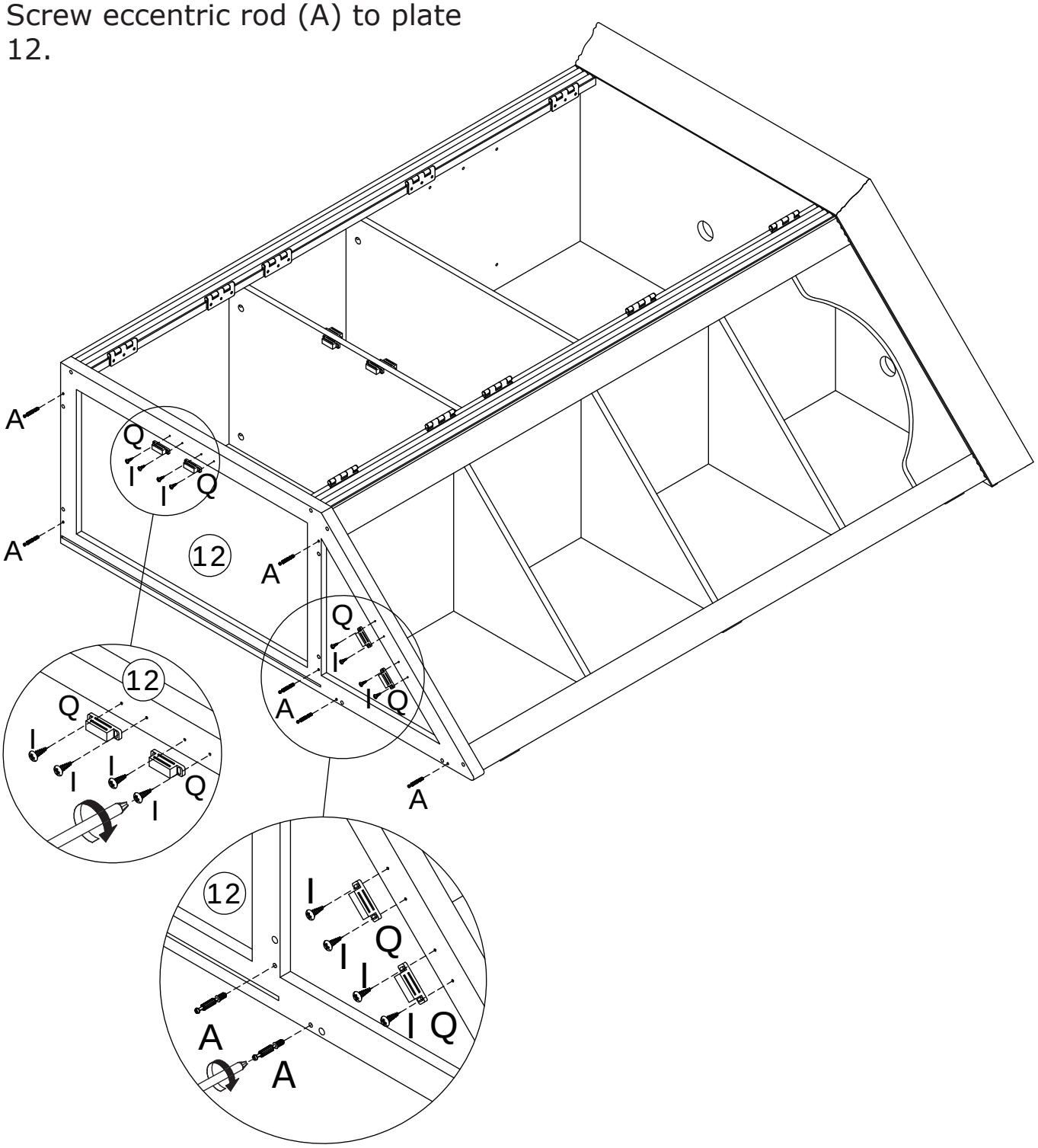

48

B x 6

∅15 x 12 mm

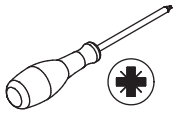

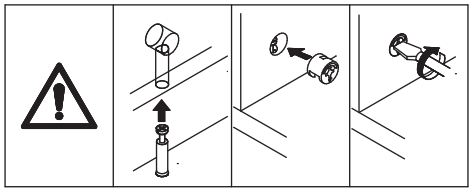

Connect the two components, then insert the eccentric wheel (B) and tighten it clockwise.

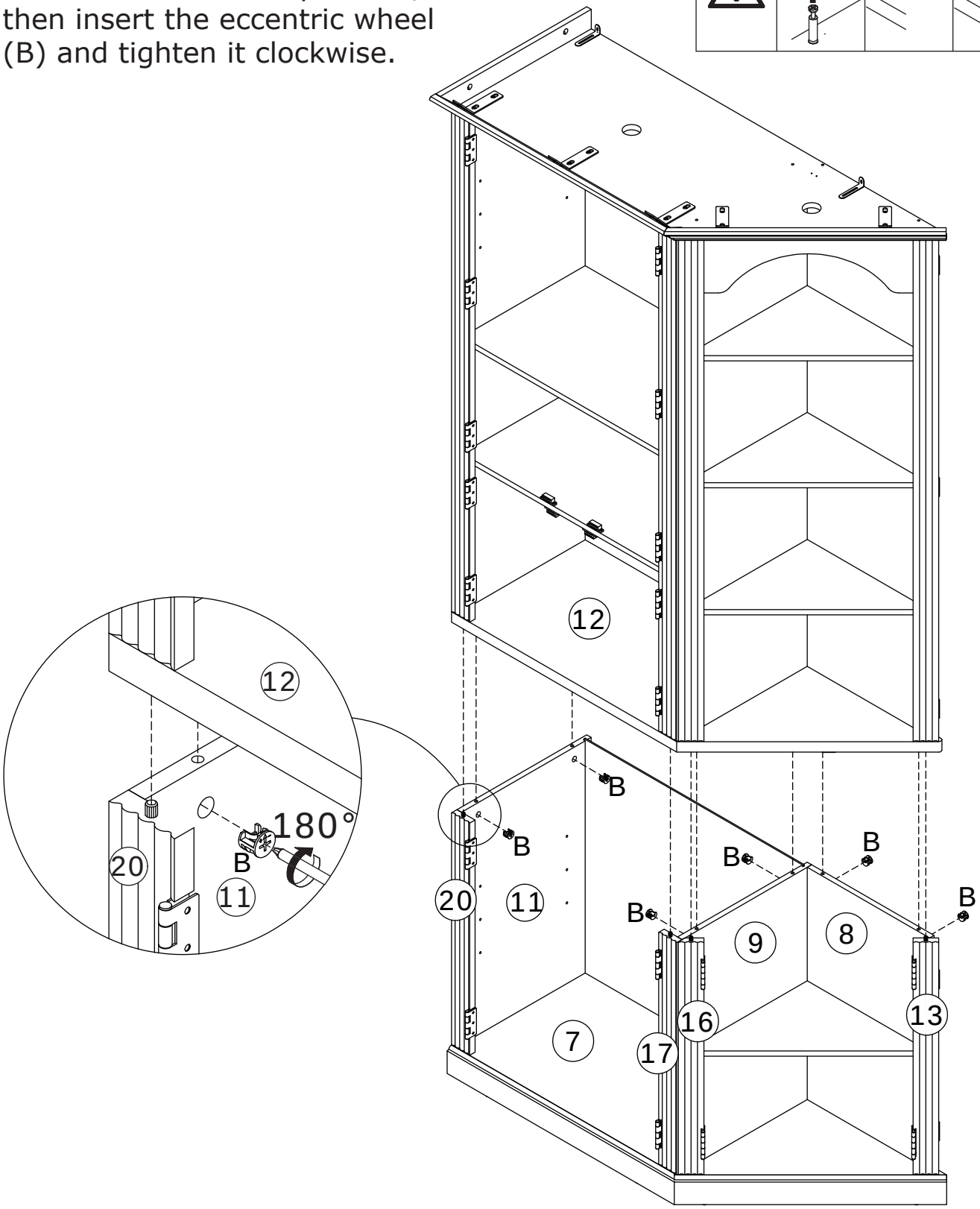

49

E x 18	J x 18	
M3.5 x 14 mm		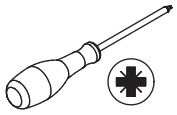

Insert clips (J) into the slots on the back plates and secure them with screws (E).

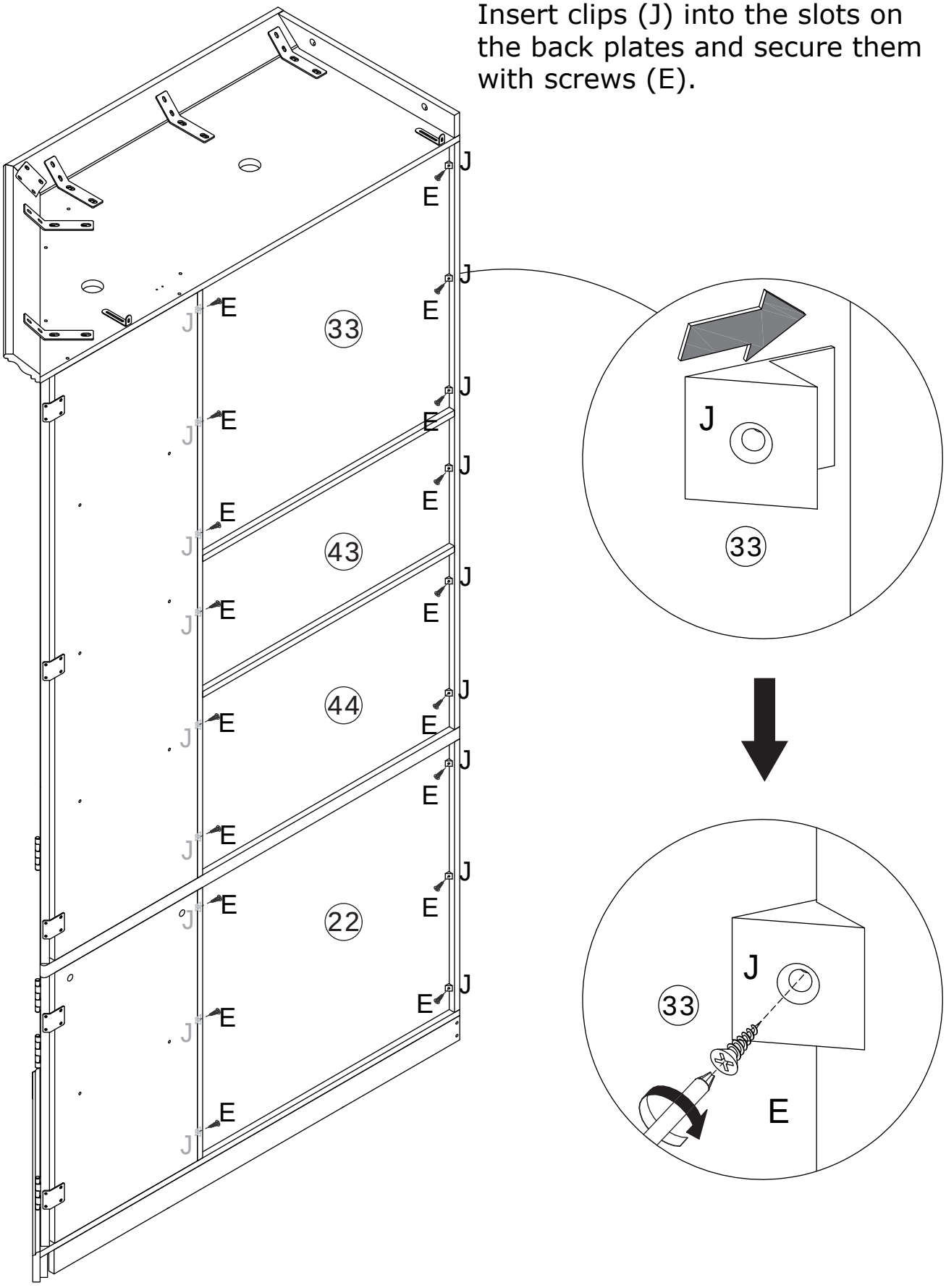

50

K x 8

∅6 mm

Insert layer pins (K) to plates 8, 11, 27, and 31.

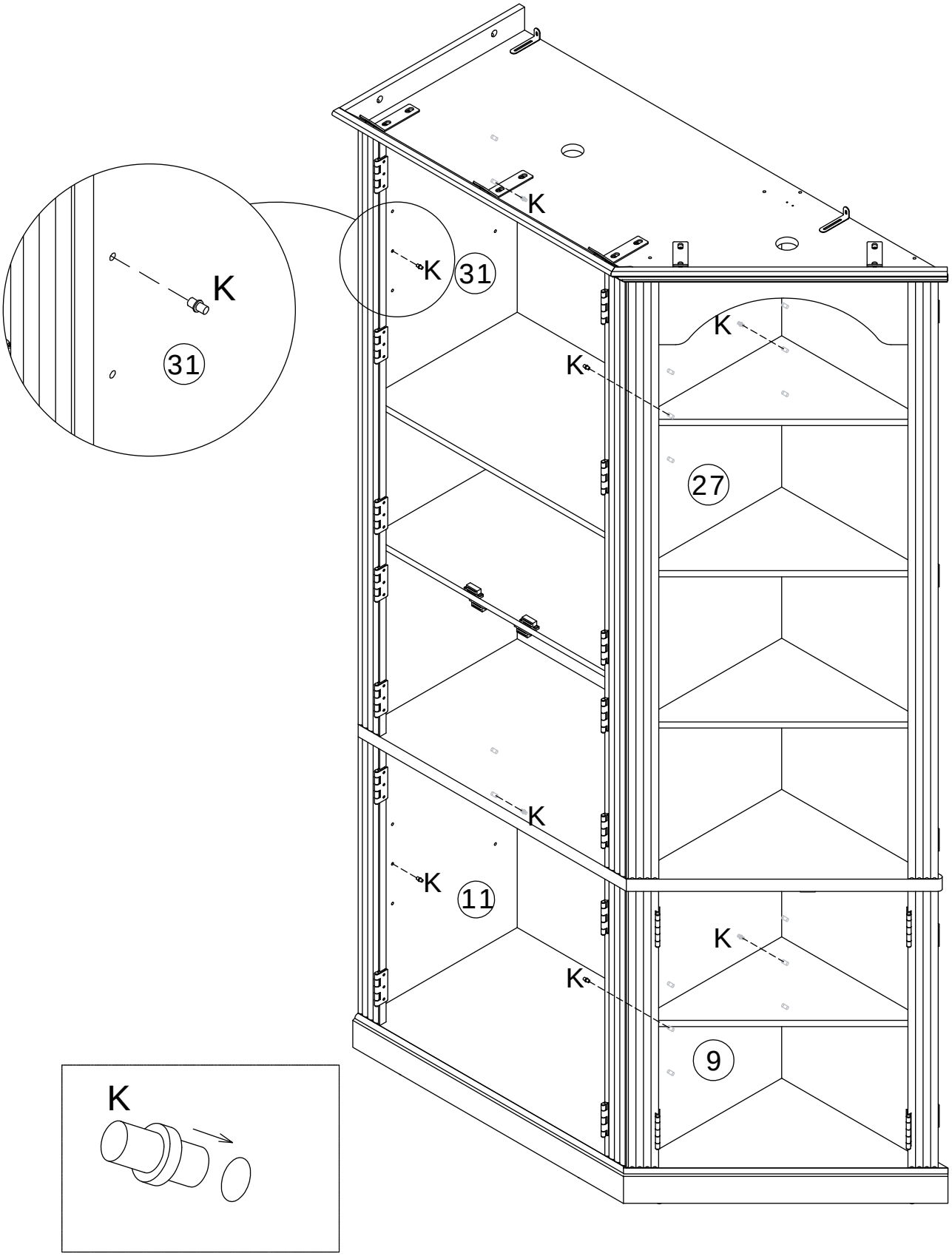

51

S x 20

∅21 x 1 mm

Insert plate 21 onto pins.

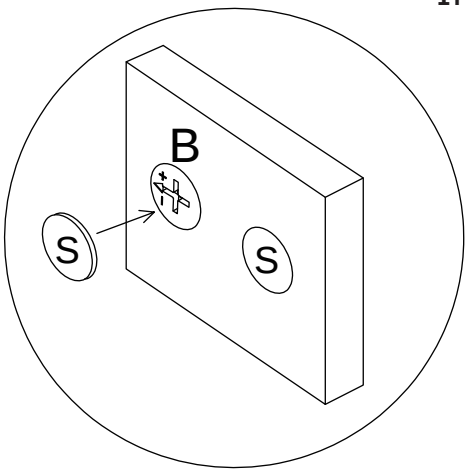

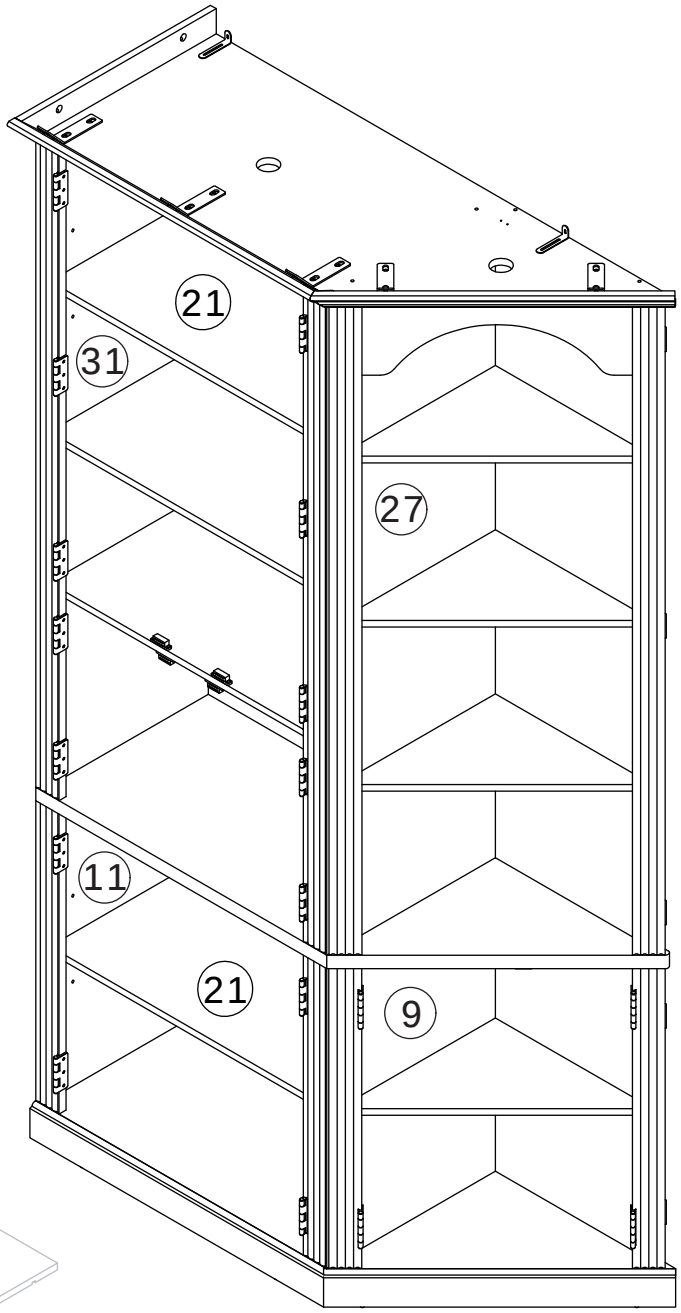

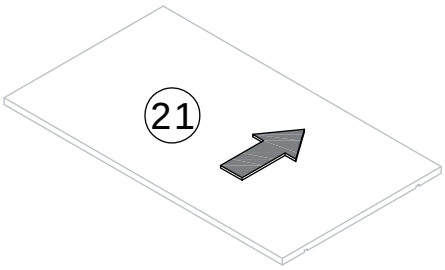

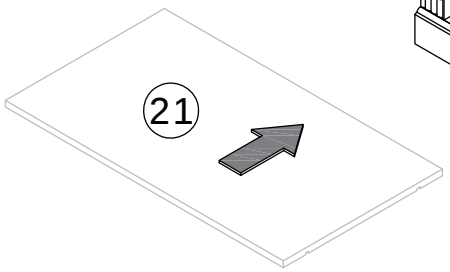

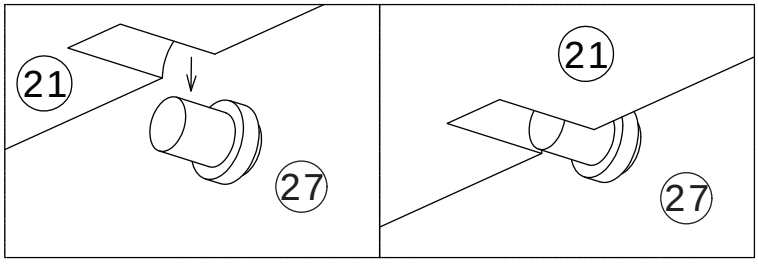

52

E x 2	L x 2	M x 1	R x 1	
M3.5 x 14 mm	M4 x 16 mm	6612-96		

Secure iron sheet (R) to plate 18 using screws (E).
Secure handle (M) to plate 18 using screws (L).

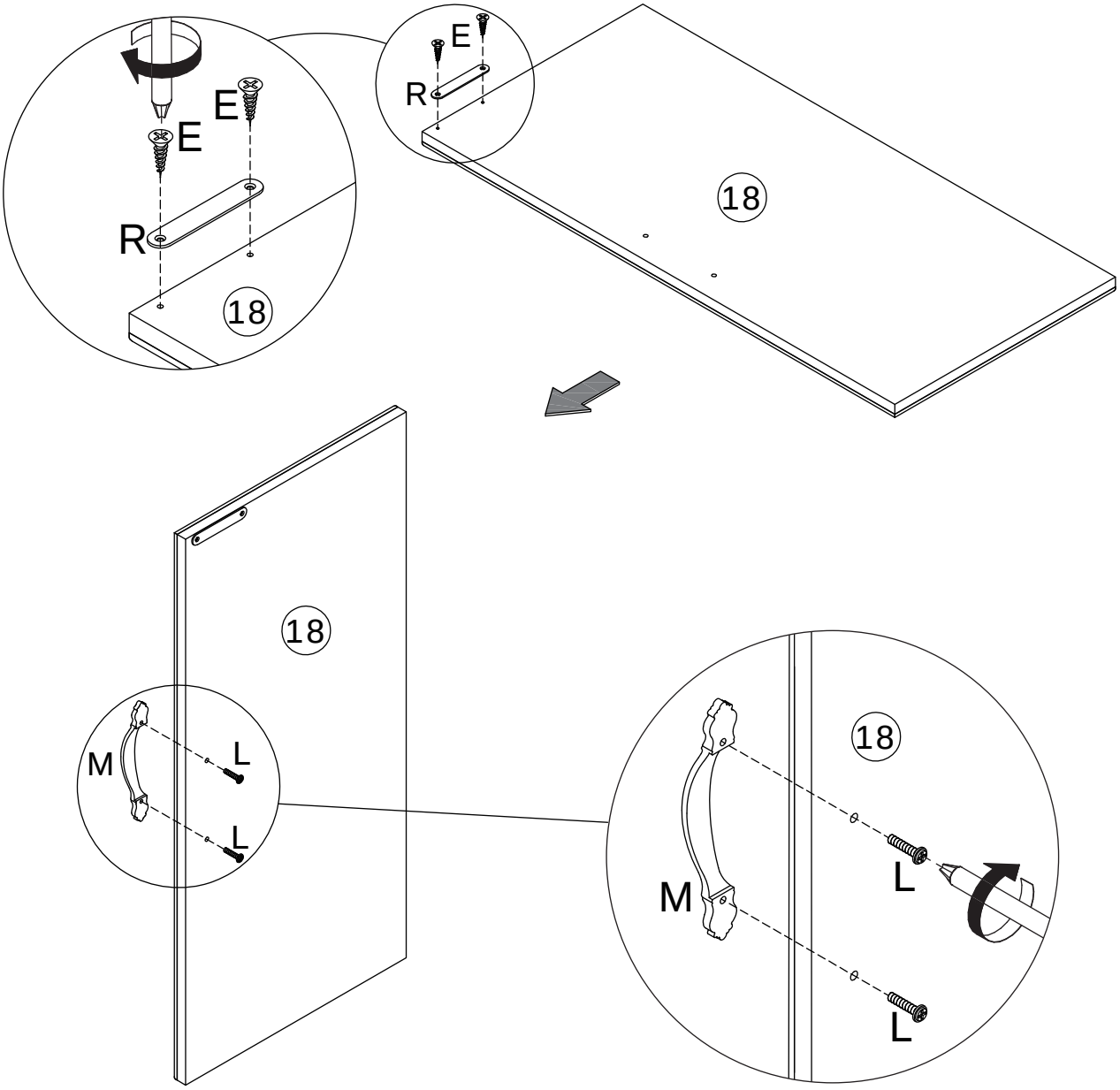

53

E x 2	L x 2	R x 1	T x 1	
M3.5 x 14 mm	M4 x 16 mm		113	

Secure iron sheet (R) to plate 45 using screws (E).
Secure knob (T) to plate 45 using screw (L).

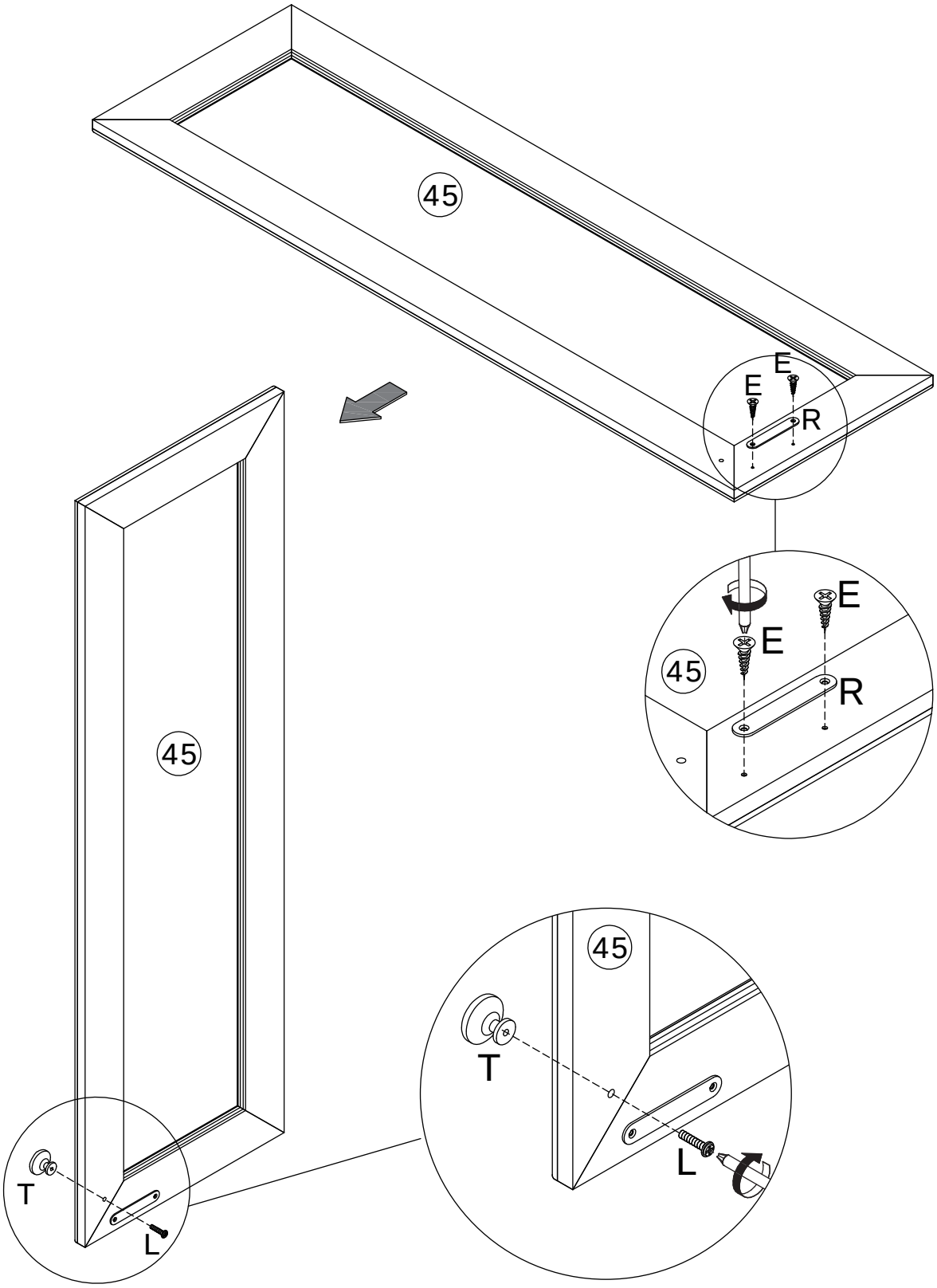

54

E x 2	L x 2	R x 1	T x 1	
M3.5 x 14 mm	M4 x 16 mm		113	

Secure iron sheet (R) to plate 47 using screws (E).
Secure knob (T) to plate 47 using screw (L).

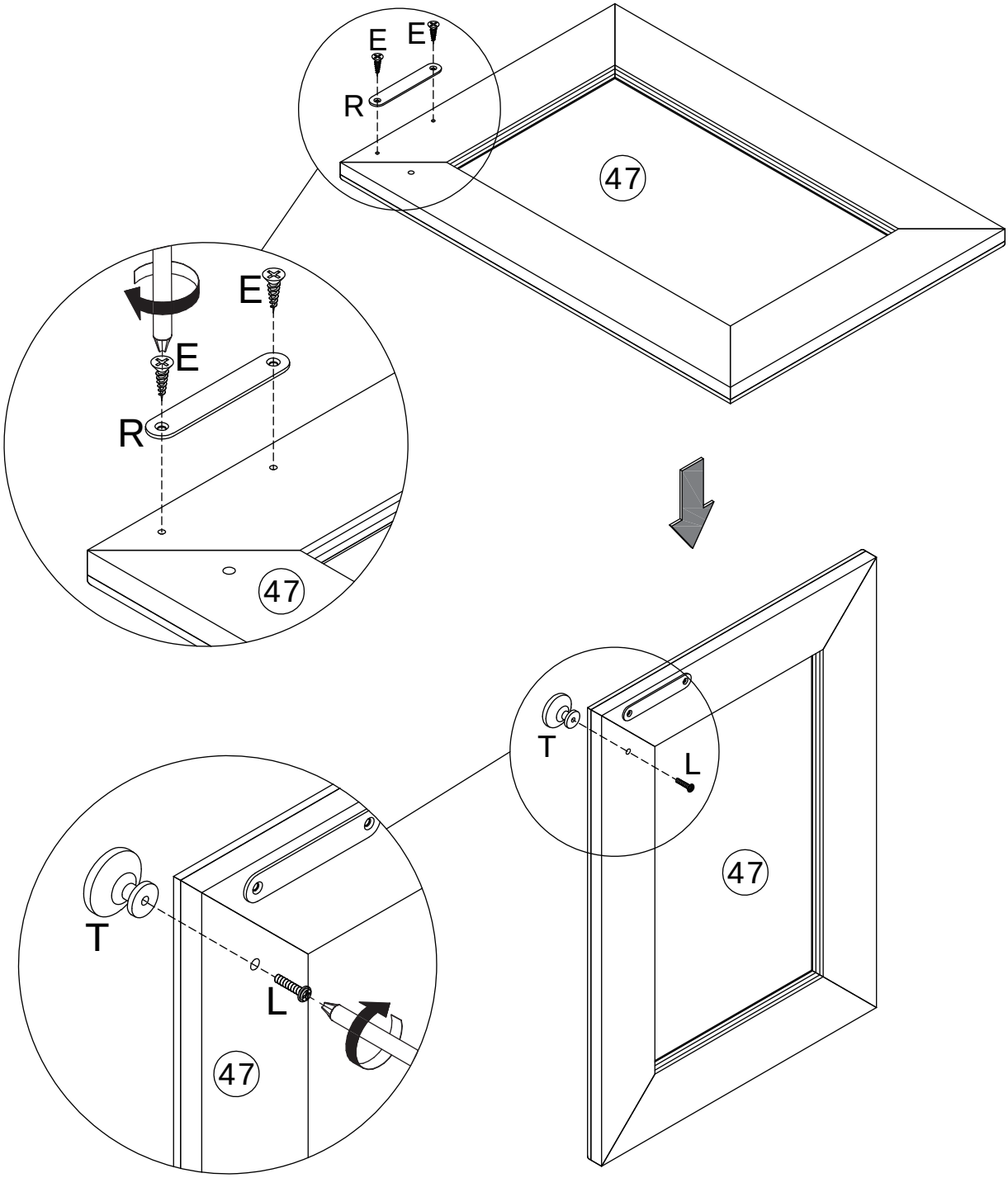

55

E x 21

M3.5 x 14 mm

Secure plate 18 to hinges (P) on plate 20 using screws (E).
Secure plates 45 and 47 to hinges (P) on plate 20 using screws (E).

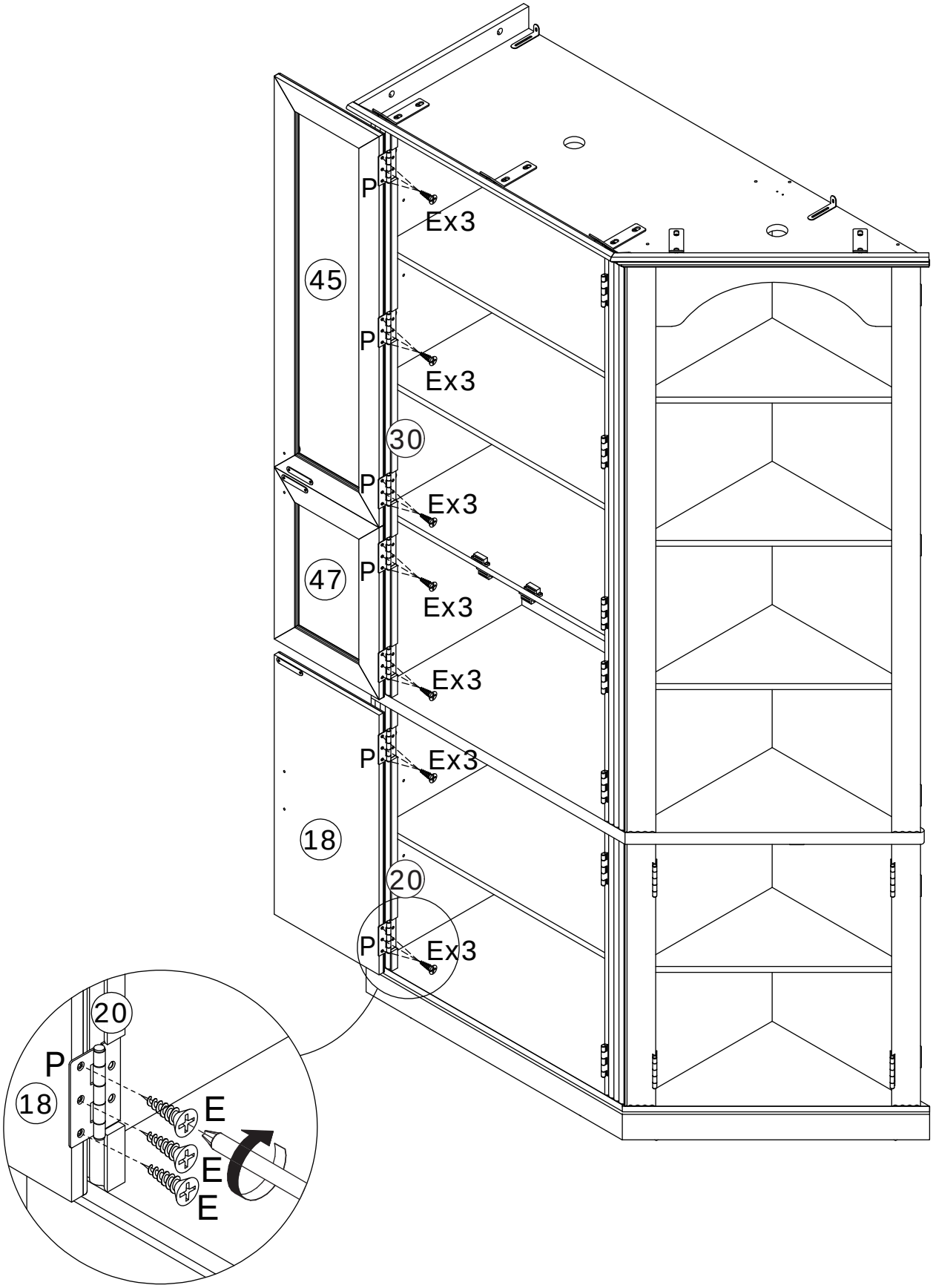

56

E x 2	L x 2	M x 1	R x 1	
M3.5 x 14 mm	M4 x 16 mm	6612-96		

Secure iron sheet (R) to plate 19 using screws (E).
Secure handle (M) to plate 19 using screws (L).

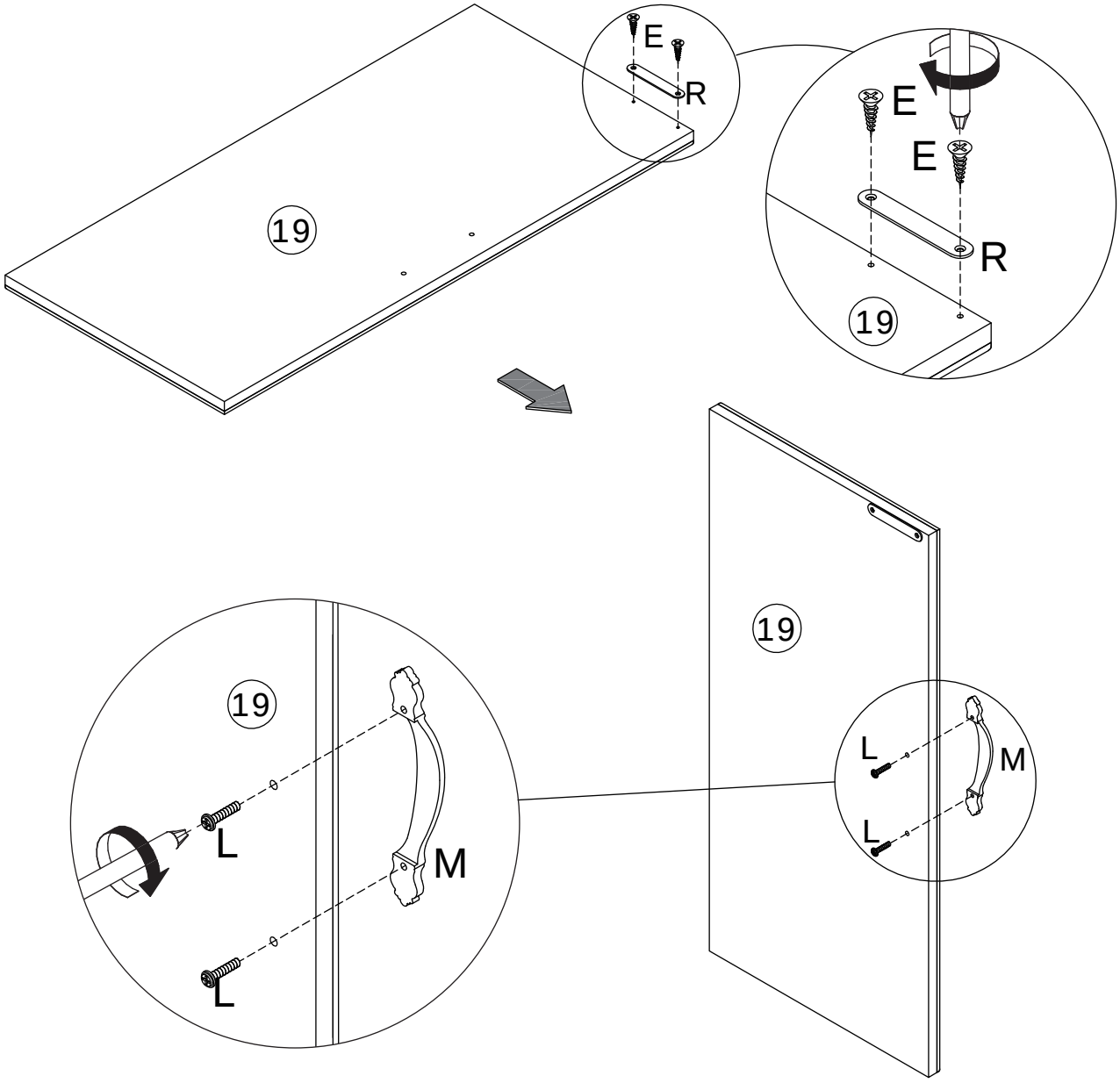

57

E x 2	L x 1	R x 1	T x 1	
M3.5 x 14 mm	M4 x 16 mm		113	

Secure iron sheet (R) to plate 46 using screws (E).
Secure knob (T) to plate 46 using screw (L).

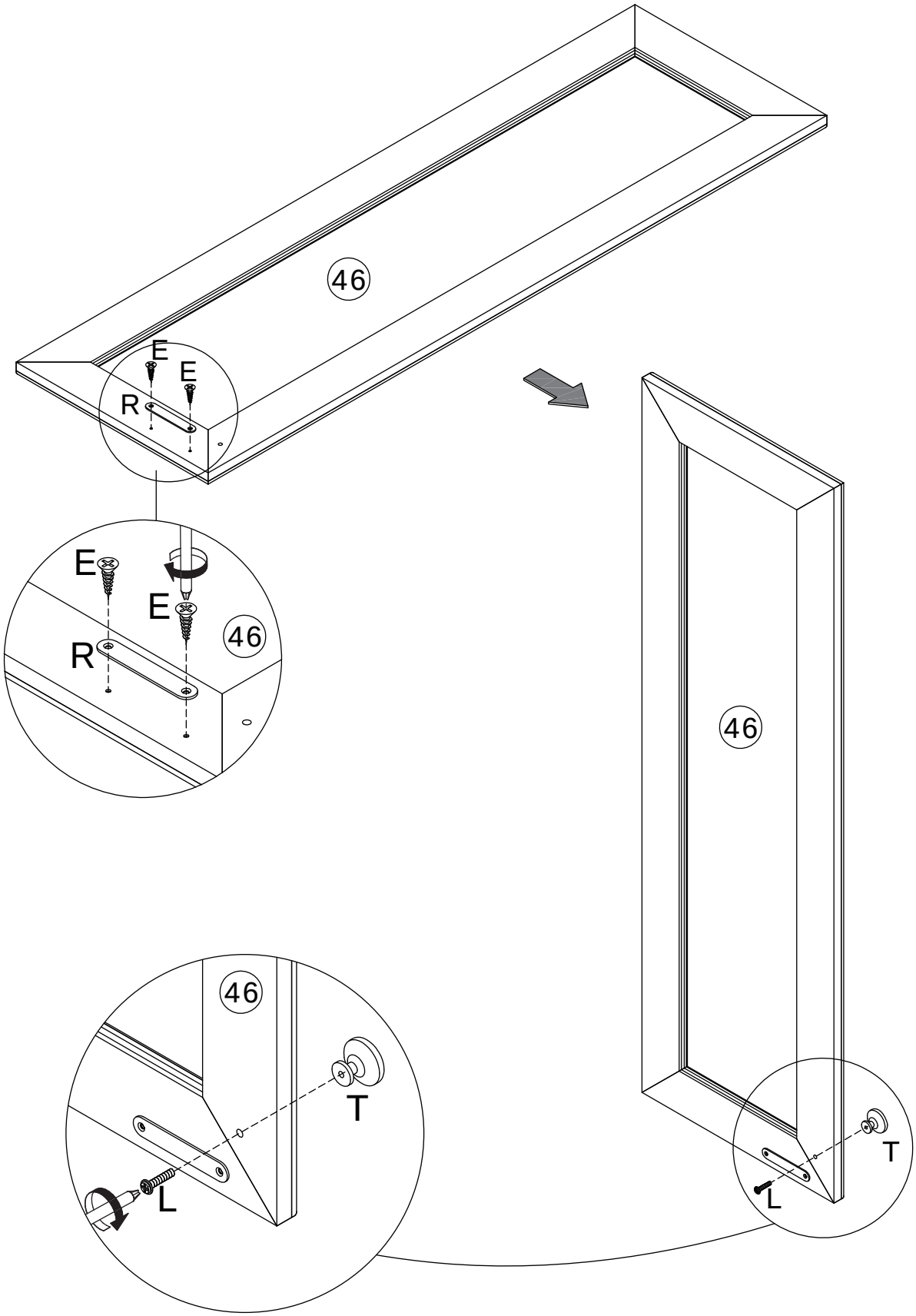

58

E x 2	L x 1	R x 1	T x 1	
M3.5 x 14 mm	M4 x 16 mm		113	

Secure iron sheet (R) to plate 48 using screws (E).
Secure knob (T) to plate 48 using screw (L).

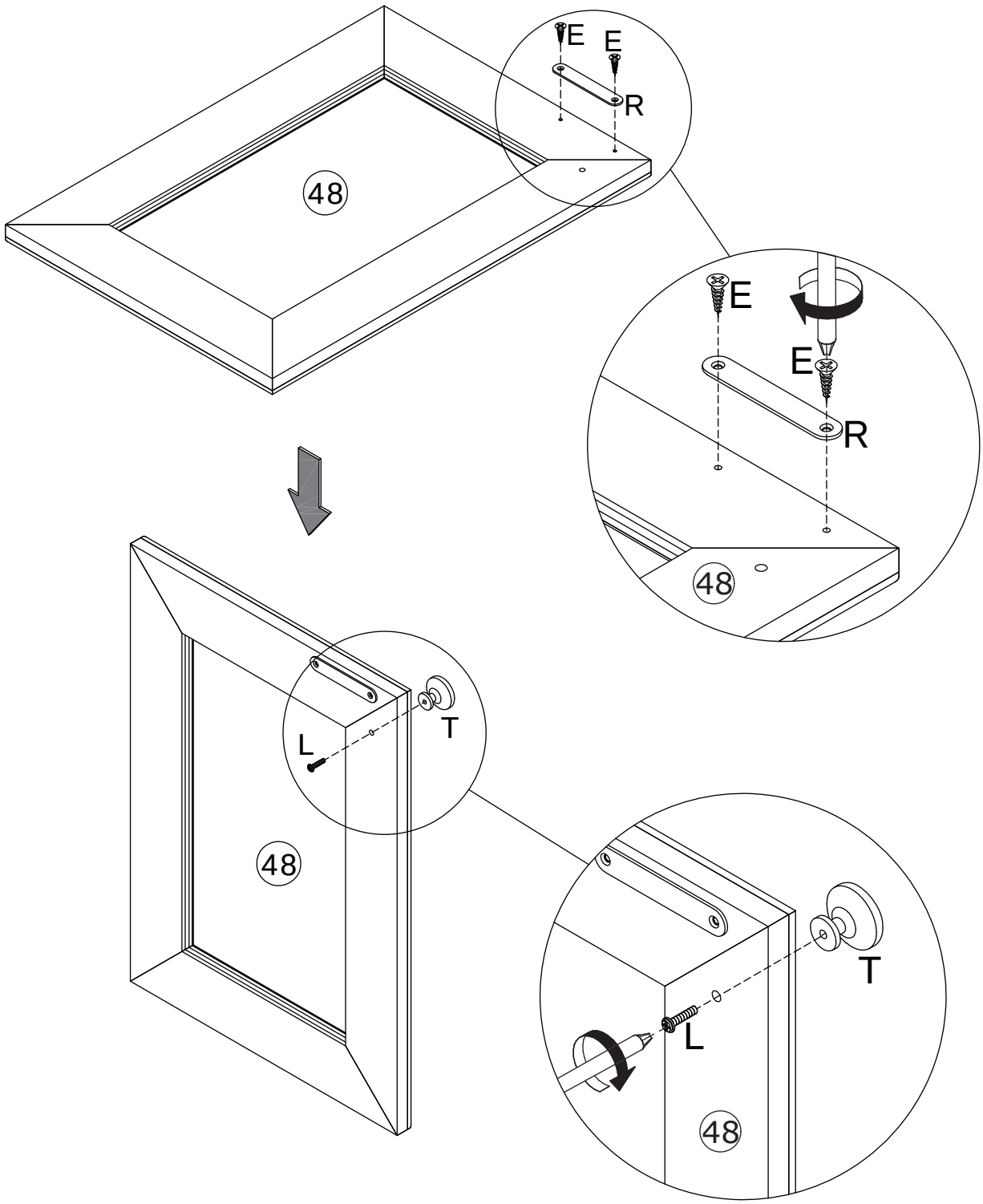

59

E x 21

M3.5 x 14 mm

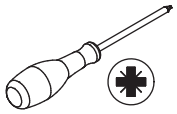

Secure plate 19 to the hinges (P) on plate 17 using screws (E).
Secure plates 46 and 48 to the hinges (P) on plate 28.

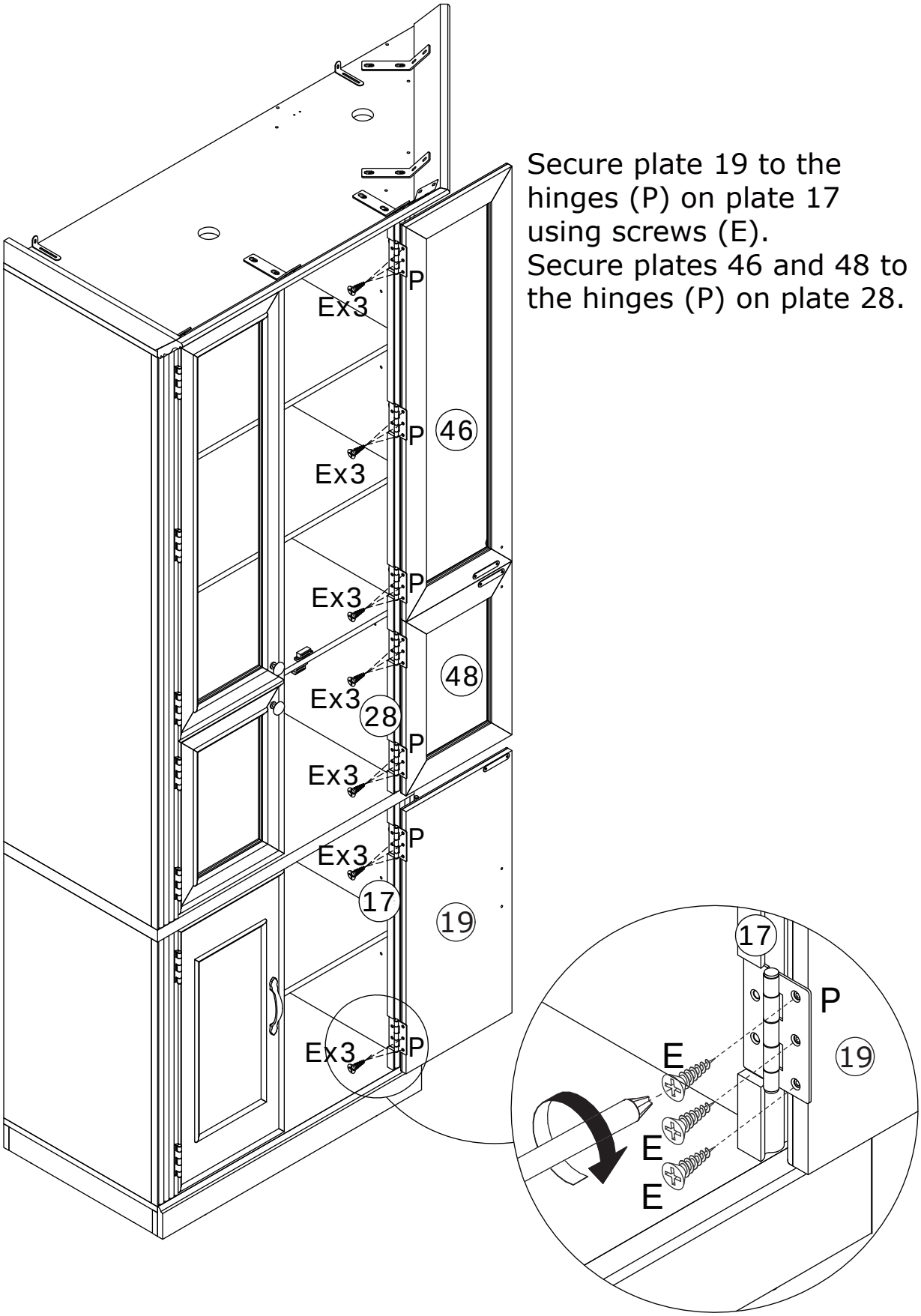

60

E x 2	L x 2	M x 1	R x 1	
			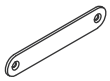	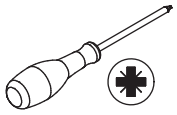
M3.5 x 14 mm	M4 x 16 mm	6612-96		

Secure iron sheet (R) to plate 14 using screws (E).
Secure handle (M) to plate 14 using screws (L).

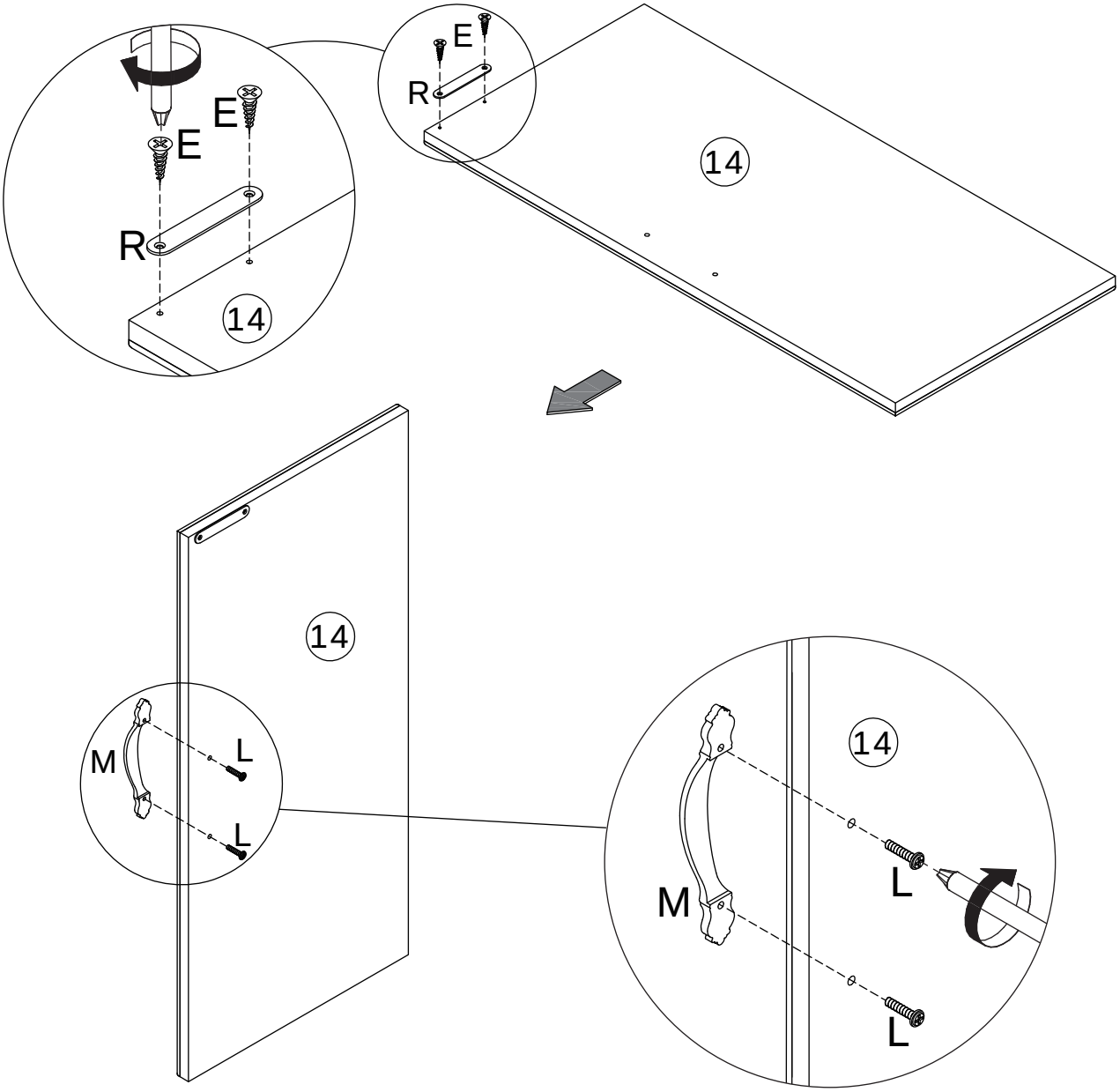

61

E x 6

M3.5 x 14 mm

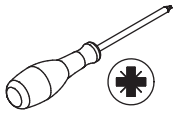

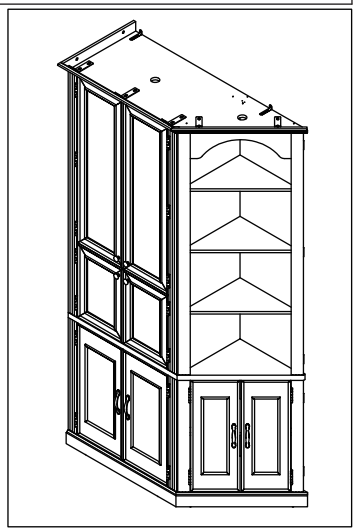

Secure plate 14 to hinges 40 on plate 26 using screws (E).

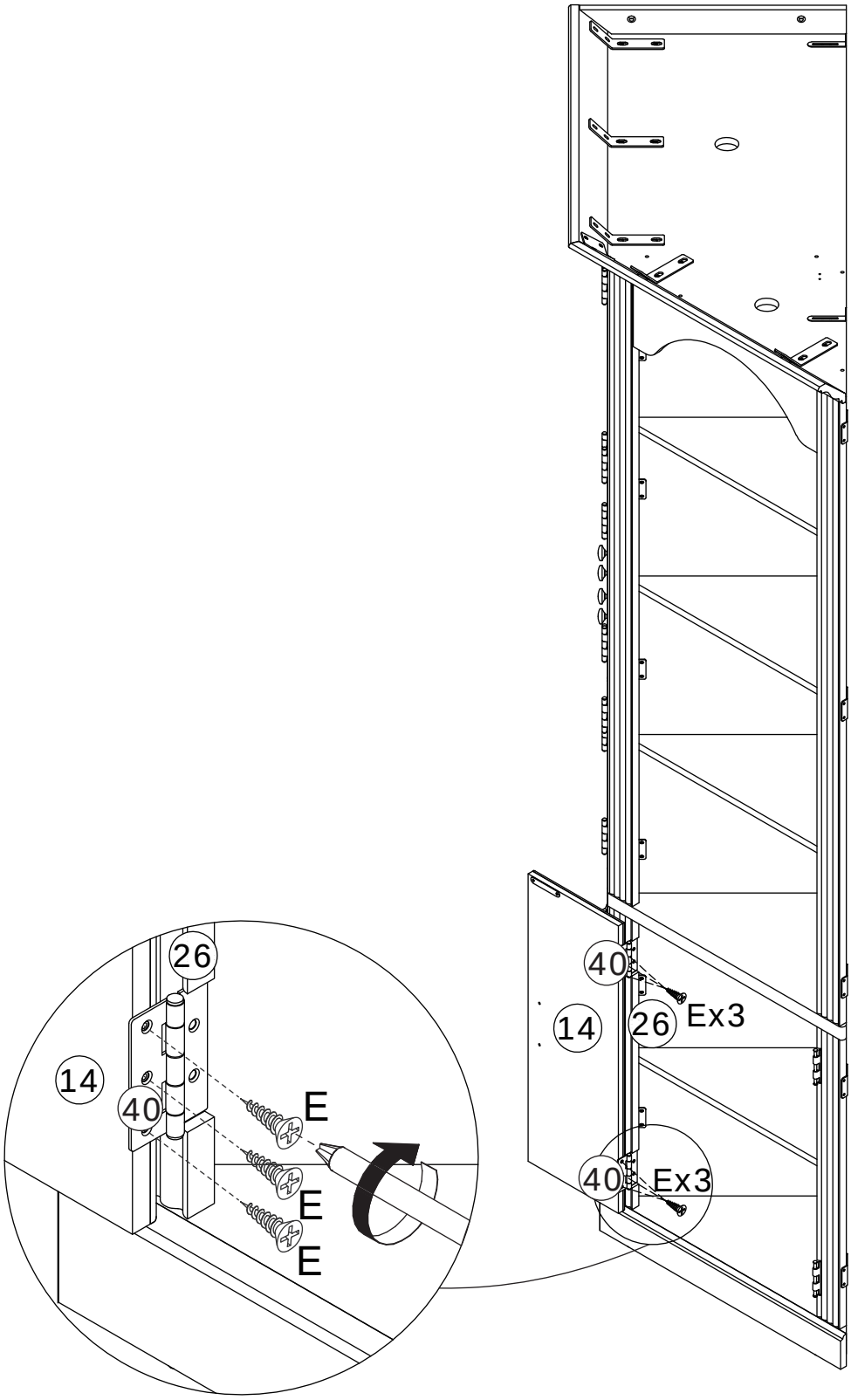

62

E x 2	L x 2	M x 1	R x 1	
M3.5 x 14 mm	M4 x 16 mm	6612-96		

Secure iron sheet (R) to plate 15 using screws (E).
Secure handle (M) to plate 15 using screws (L).

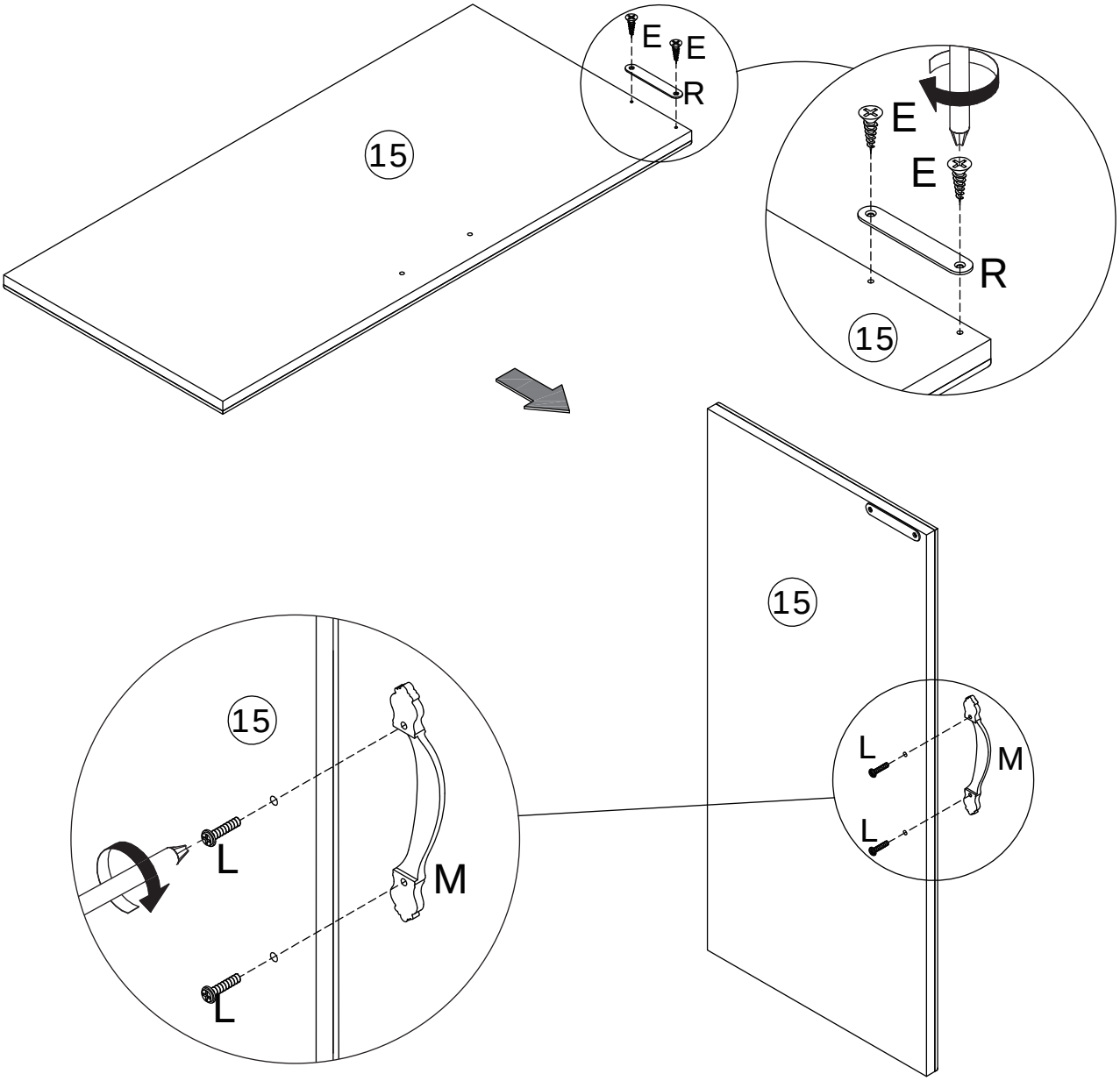

63

E x 6

M3.5 x 14 mm

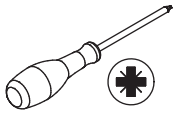

Secure plate 15 to hinges 41 on plate 23 using screws (E).

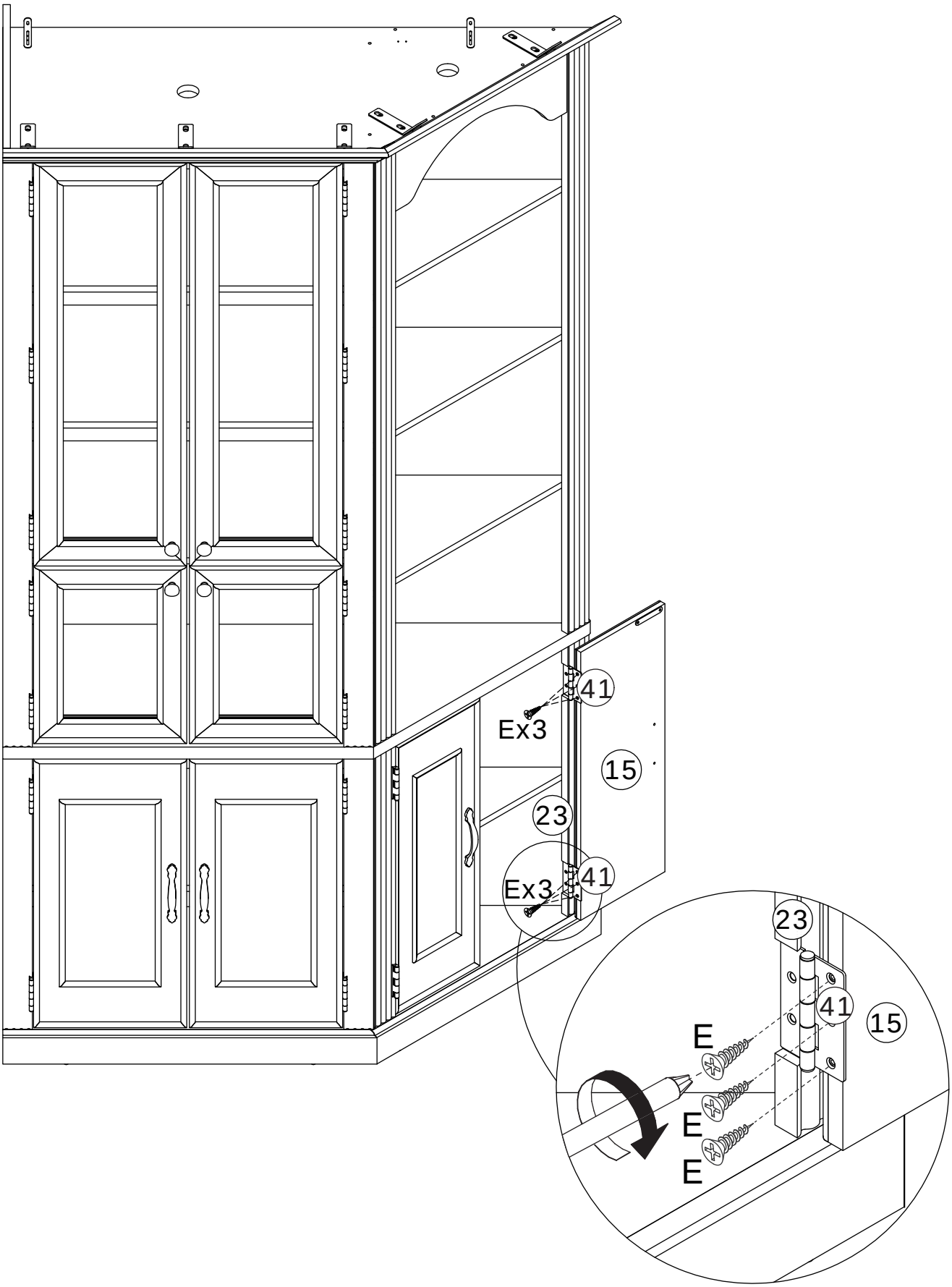

64

N x 2

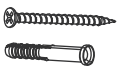

M5 x 55 mm
∅8 x 60 mm

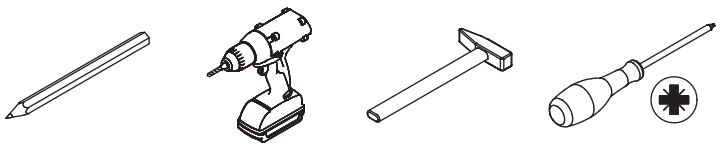

Install the anti-tip device as shown.

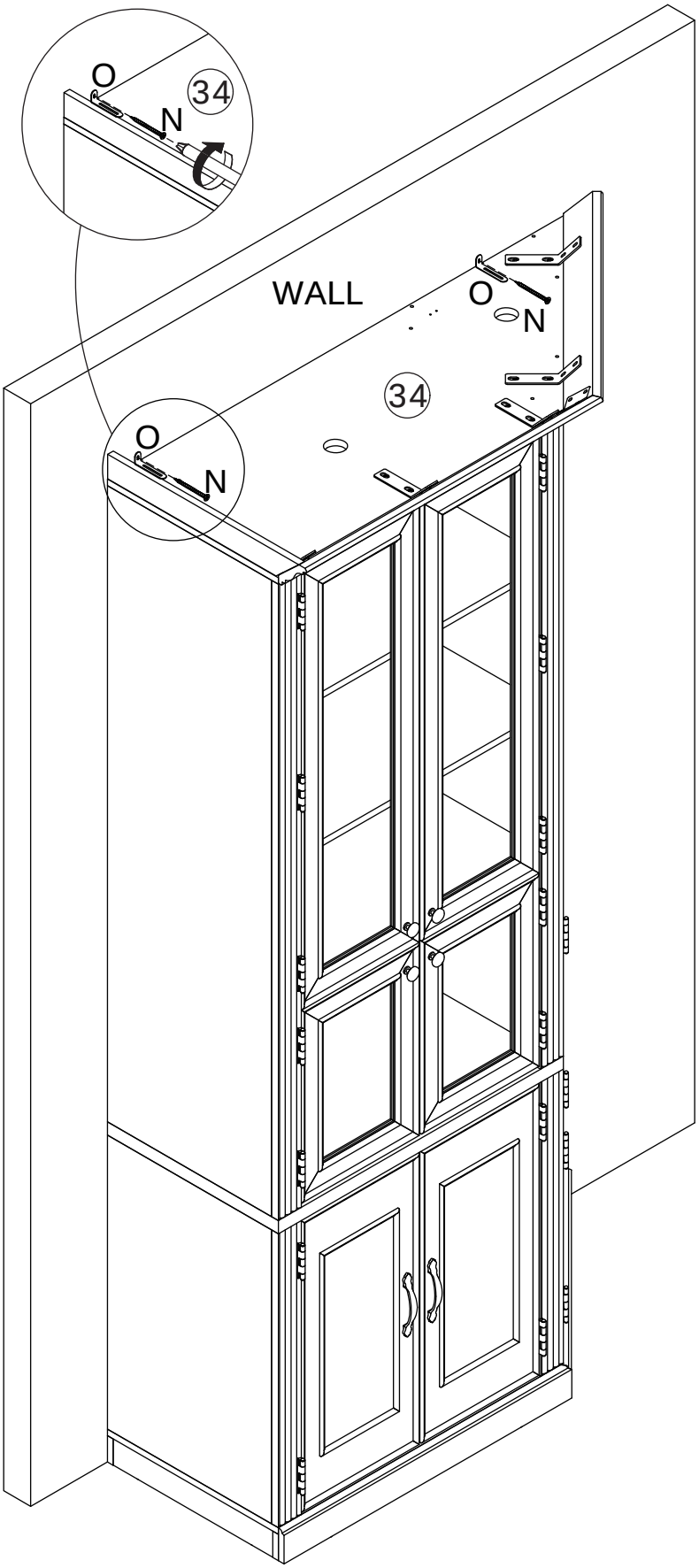

1.

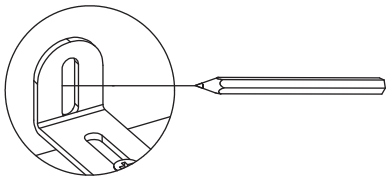

2.

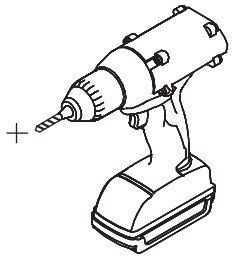

3.

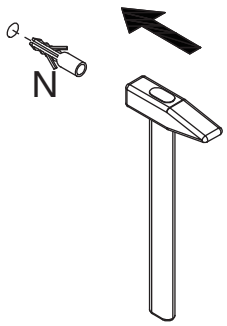

4.

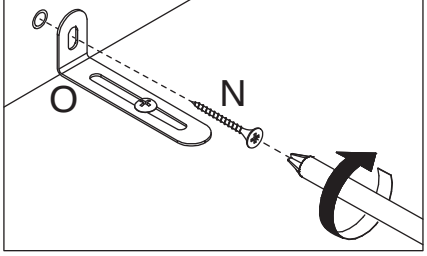

65

H x 2

M3 x 20 mm

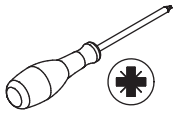

Install the light strip.

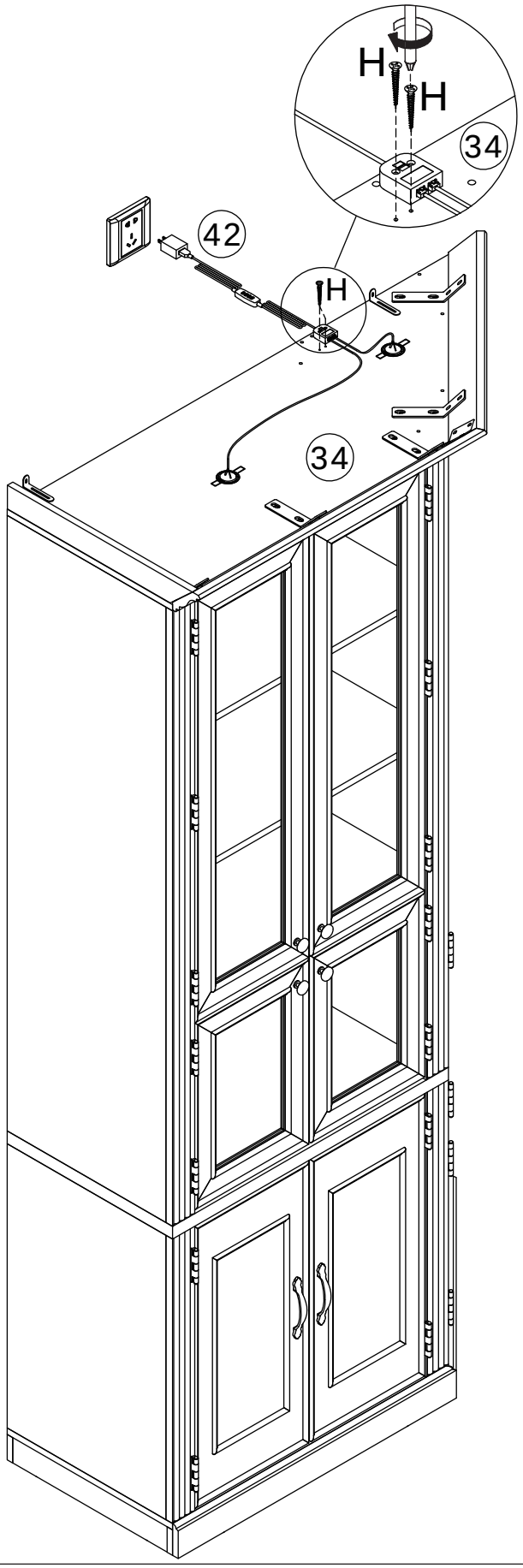

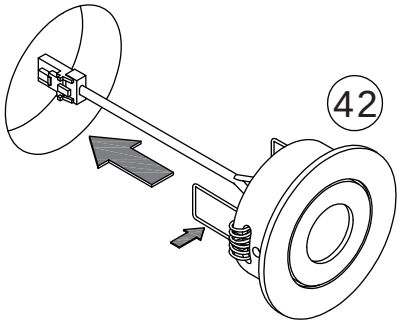

Step 1

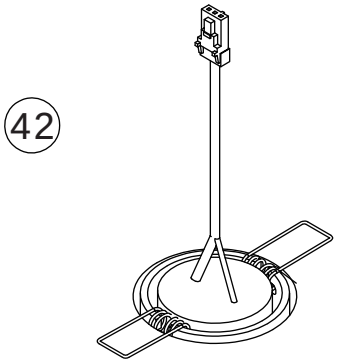

Step 2

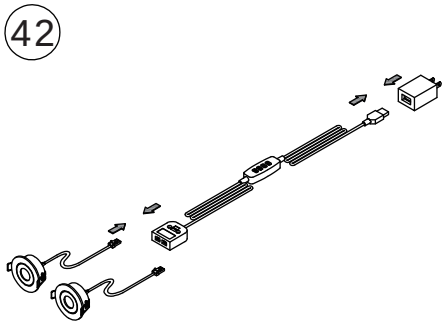

Step 3

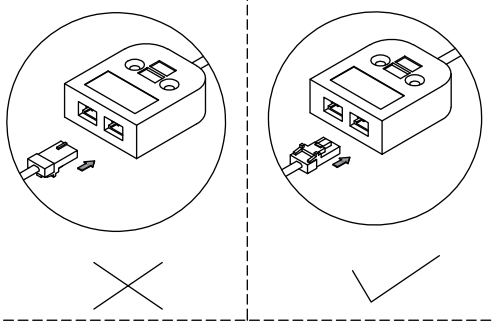

Step 4

WARRANTY

WARRANTY CLAIMS

•There is a 30-day warranty for broken furniture or any other problems that do not work properly. The warranty will start from the date of purchase which must be verified by proof of purchase.

•Before making a claim, we may be able to answer your query, simply call us. Please leave your purchase order number, along with some details of the problem, if you want a replacement part. We will arrange within 48 hours. If there is out of stock, we will reply with a shipping date.

•The product must be used in accordance with the instructions provided. For health reasons.

•For other reasons, if the furniture needs to be returned, it must be cleaned and dried and operated within 30 days of receipt.

Type of Warranty Claim

•Failure to follow the furniture instructions will invalidate the warranty. Attention please.

•Does not include damage during installation, but includes damage during transportation.

Scope of responsibility

•Shall not bear any responsibility for misuse or user damage and / or loss of parts during the installation of furniture.

•After using, the damage and scratches of the furniture are not covered by the warranty.

The Warranty Relates to All Bought in The Us and Covers The Following Areas

•Sheet parts: 1 month from the date of purchase.

•Electrical parts: 1 month from the date of purchase.

RETURNS

CHANGED YOUR MIND AND NEED TO RETURN YOU ITEM?

PLEASE FOLLOW THE BELOW INSTRUCTIONS:

- If you have purchased and have simply changed your mind, follow the retailer's instructions for returns.

DEFECTIVE ITEMS

- If your item is defective in any way, i.e. it doesn't work but you can't identify why, in the first instance, please call us.

DAMAGED ITEMS

- If you receive an order with obvious shipping damage from the retailer, then we suggest the delivery is refused. If the delivery has been accepted and then shipping damage is found, please follow the specific instructions advised by the retailer.
  In all circumstances please save all packaging material and paperwork for the order. Please be aware that if you dispose of packaging material or attempt to return the merchandise without contacting the fulfiller, you jeopardise your chances of making a claim, and you may not receive a credit for the return.