Assembly Instructions

Caution: You must read this before you proceed

Barstool

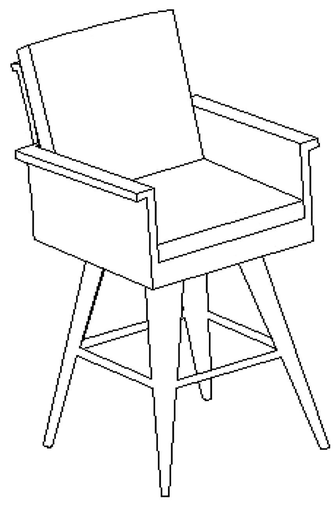

Parts List

Label	Picture	Description	QTY
A	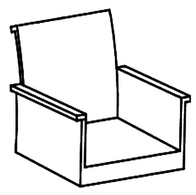	Seat	1
B		Legs	1
C	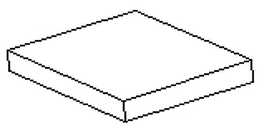	Seat Cushion	1
D	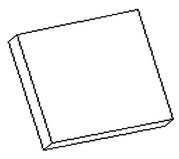	Back Cushion	1

Hardware

Label	Picture	Description	QTY
①	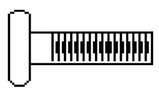	Bolt (M6*20mm)	5
②		Spring Washer	5
③		Washer	5
④		Allen Wrench	1

Assembly Preparation

Before Beginning Assembly:

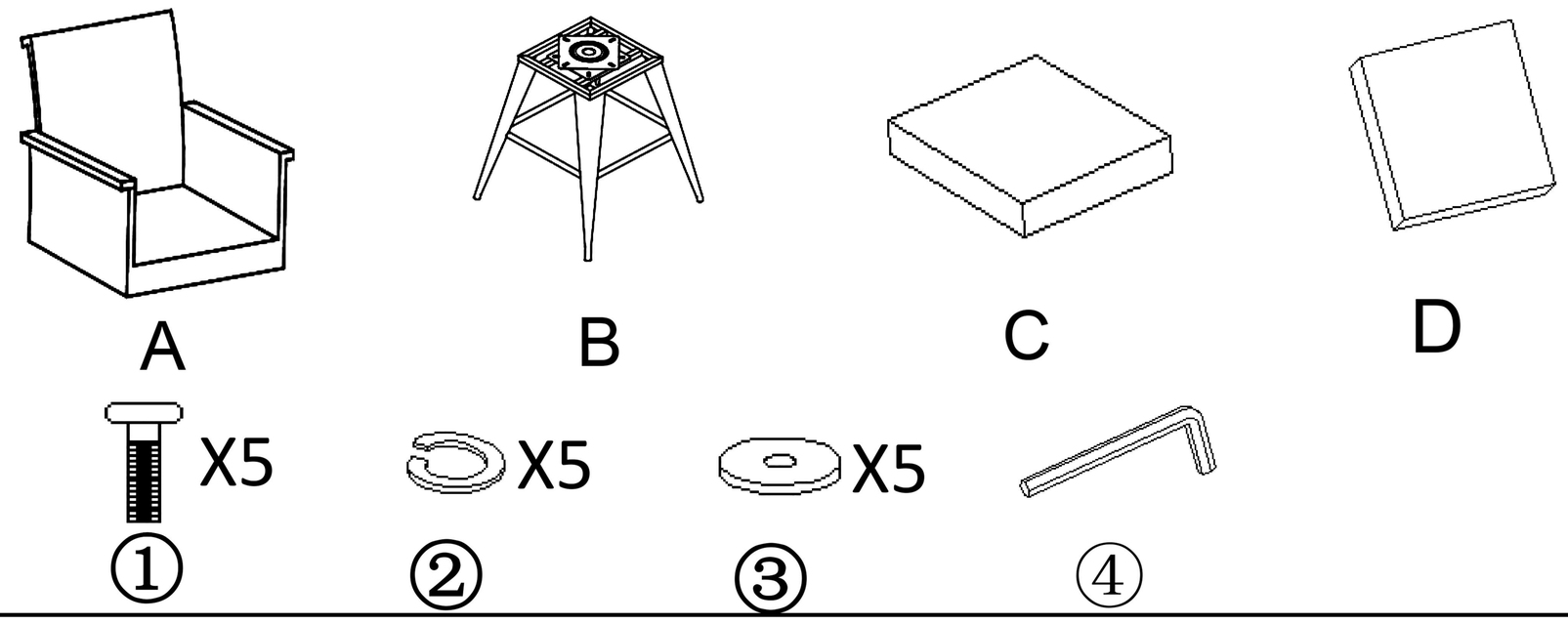

- Read instructions, cover to cover-
- Have 2 adults on hand for assembly-
- Do not assemble on flooring or carpet-
- Assemble on a clean non-marring surface (packing foam)-
- Save all packaging until finished-

Assembly Steps

Overview

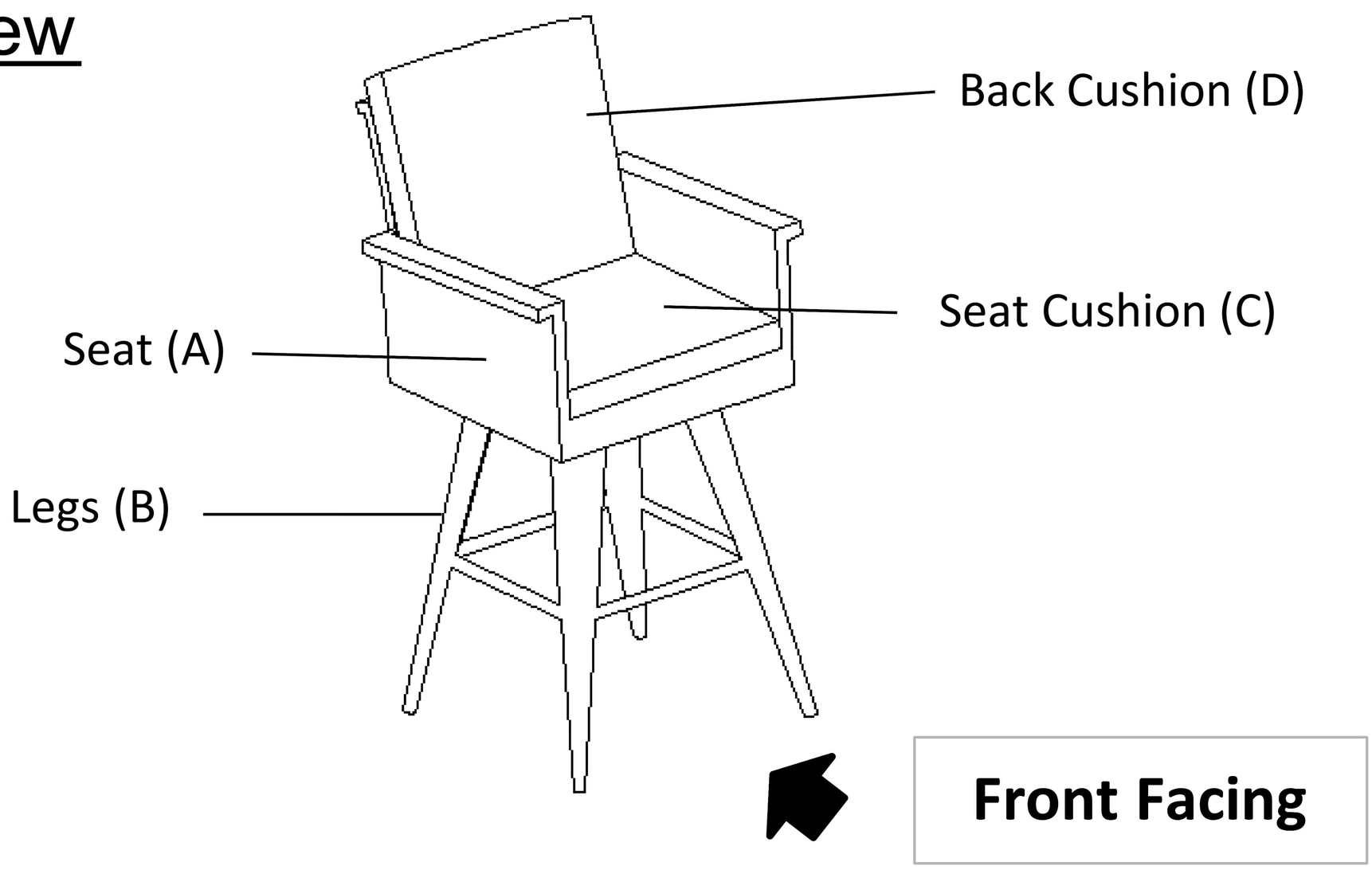

This Barstool has multiple parts and may require up to 30 minutes to assemble. To give you an overview of the Barstool parts, the above picture is to help you put the various parts into perspective. Please read through the instructions below to familiarise yourself with the parts and steps before assembly.

Step 1

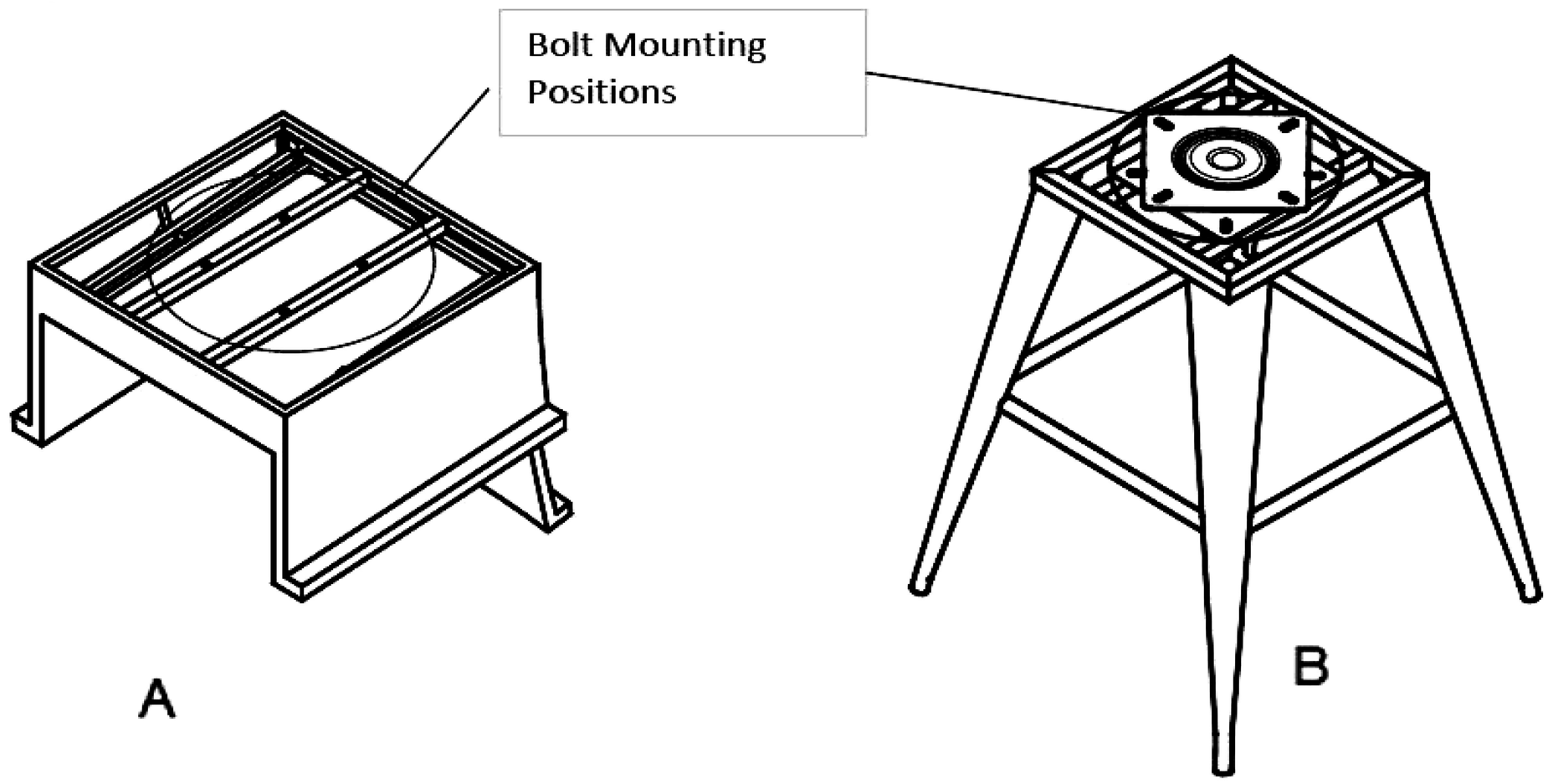

Open the carton, and place all parts on a clean, non-marring surface.
Place the Seat(A) facedown on the clean, non-marring surface as shown above.

Step 2

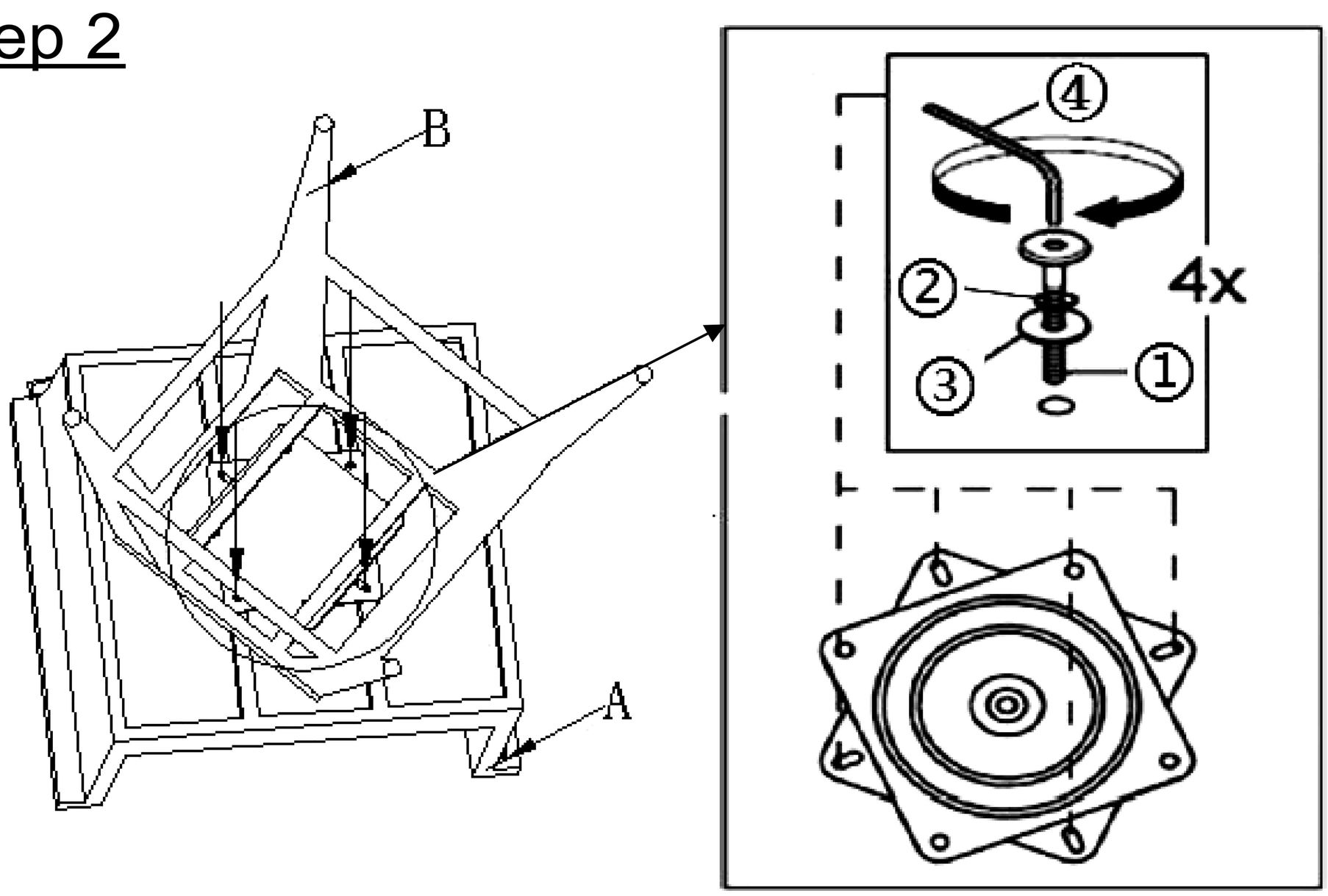

Turn the Legs(B) over and place it onto the Seat(A) as shown above.
Then turn the Swivel Plate some 45° to the position as shown above.
Align the Bolt mouting positions of the Swivel Plate with those on the Seat(A).
Attach Legs(B) to Seat(A) using Bolts(①), Spring Washers(②), and Washers (③) with Allen Wrench (④) as pictured above.
Do not fully tighten the Bolts.

Step 3

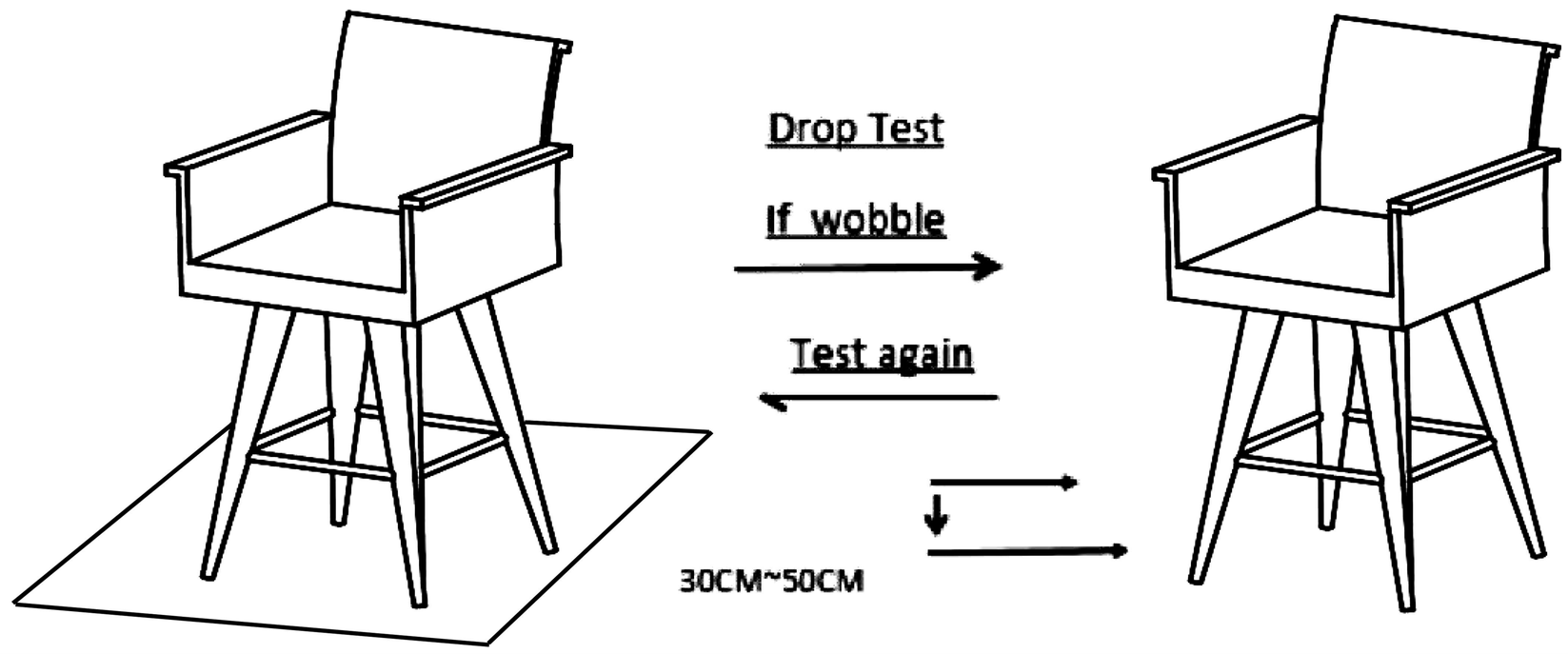

Stand the Barstool up.
Place the Barstool on a LEVEL SURFACE to check for wobbles.
If it wobbles, lift the Barstool some 30cm to 50cm high from the ground.
Keep your feet and toes well away from the drop zone.
Drop the Barstool freely and vertically with all four legs, hitting the ground, all at the same time.
This drop test will help to ensure that all the Bolts and gaps reach full alignment status.
Test again for eveness on a LEVEL SURFACE.
If no wobbles are found, slowly and steadily, place the Barstool face down.
Then, proceed to tighten all Bolts in a sequential manner.
When tightening the Bolts, tighten sequentially.
DO NOT tighten any Bolt fully and then move on to the next one.
If there is still wobbles, loosen the Bolts and execute this same process.
If the Barstool is not stable it could lead to damage to the product.Ensure that all Bolts and Nuts are securely tightened.
Caution: During the assembly process, DO NOT place fingers between the Seat(A) and Legs(B).

Step 4

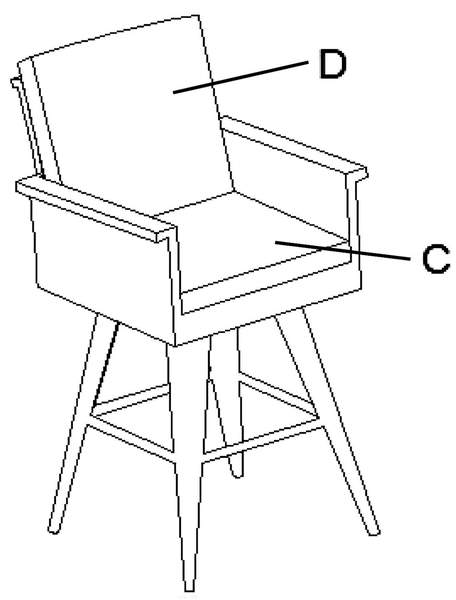

Place the Seat Cushion(C) and Back Cushion(D) onto the Barstool.
Your Barstool is ready for use.
This Barstool can only be used on a flat, level surface.

Care & Maintenance

- Prolonged exposure to rain may cause rusting which can stain floors.
- Do not put hot items directly on furniture surface.
- Do not clean furniture with harsh cleansers or polish.
- To obtain the longest lifespan of your outdoor products, minimizing exposure to direct sunlight is recommended.
- Children should not climb or jump on the furniture.
- Do not write on furniture without a padded barrier to protect the surface.
- To obtain the longest lifespan of your outdoor products, avoid extended and lengthy exposure to rain, snow, and direct sunshine. Whenever possible cover the product and /or place under patio or awnings.
- Not for commercial use. For residential use only.
- Stains may be removed with mild soap solution and damp cloth.
- Keep away from sources of ignition.

- Dust and pick-up spills using a clean, non-colored, lint-free cloth.