BENCH

Thank you for purchasing this bench!

Before you start, here is some helpful advice:

1. We suggest you spend a short time reading through this leaflet and then follow the simple step by step instructions.
2. Owing to the size and weight of the bench, we recommend that it is assembled by two adults, on a carpeted or padded area, in the room that it is intended for. Approximate assembly time: 30 minutes.
3. Please do not use any tools other than those provided or recommended in these instructions.
4. Please do not throw away any of the packaging or instructions until you have checked all the components and hardware and the furniture is fully assembled.
5. Assemble all components loosely until advised to tighten. Depending on use, it may be necessary to tighten the components from time to time, so please save the tools that have been provided.
6. Please keep all pieces out of reach of small children.

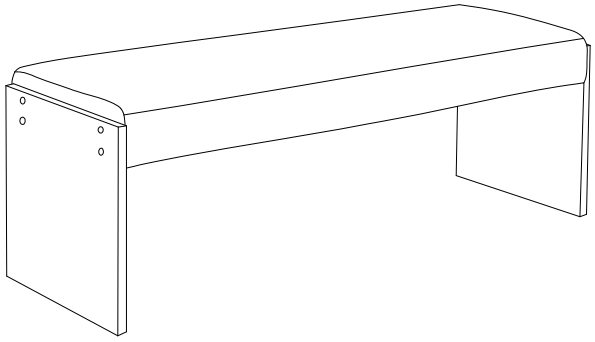

Hardware:

A	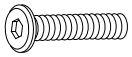	Bolt M6x40mm	x 8
B		Spring Washer M6	x 8
C		Flat Washer M6	x 8
D		Plastic Washer	x 8
E		Allen Wrench	x 1

Component:

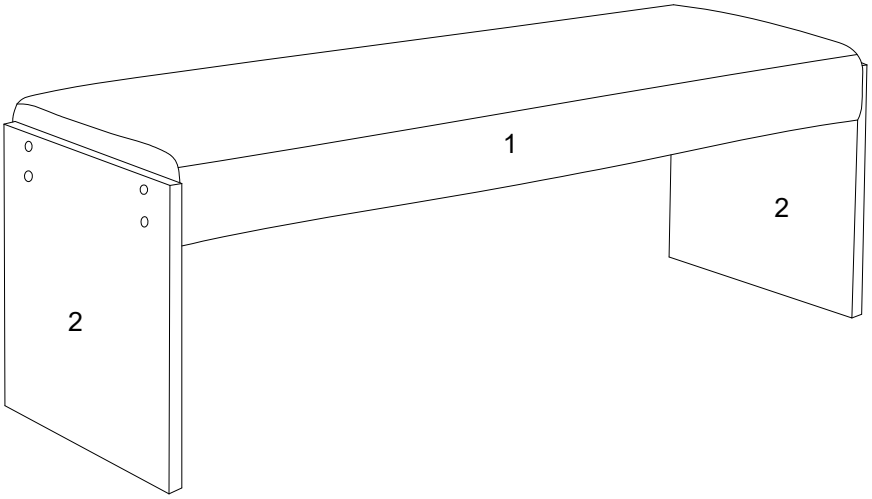

1 Bench Body x1

2 Bench Side x2

BENCH

STEP 1:

Please find the hardware package in the carton.

Put 1 piece of **Bench Side (2)** on a carpeted or padded area.

Attach Bench **Body (1)** to the **Bench Side (2)** by using 4 pieces of **Bolt (A),** 4 pieces of **Spring Washer (B)**, 4 pieces of **Flat Washer (C)** and 4 pieces of **Plastic Washer (D)** as shown.

Repeat the same steps for the remaining **Bench Side (2)**.

Use **Allen Wrench (E)** to tighten all the **Bolts (A)** clockwise until secure.

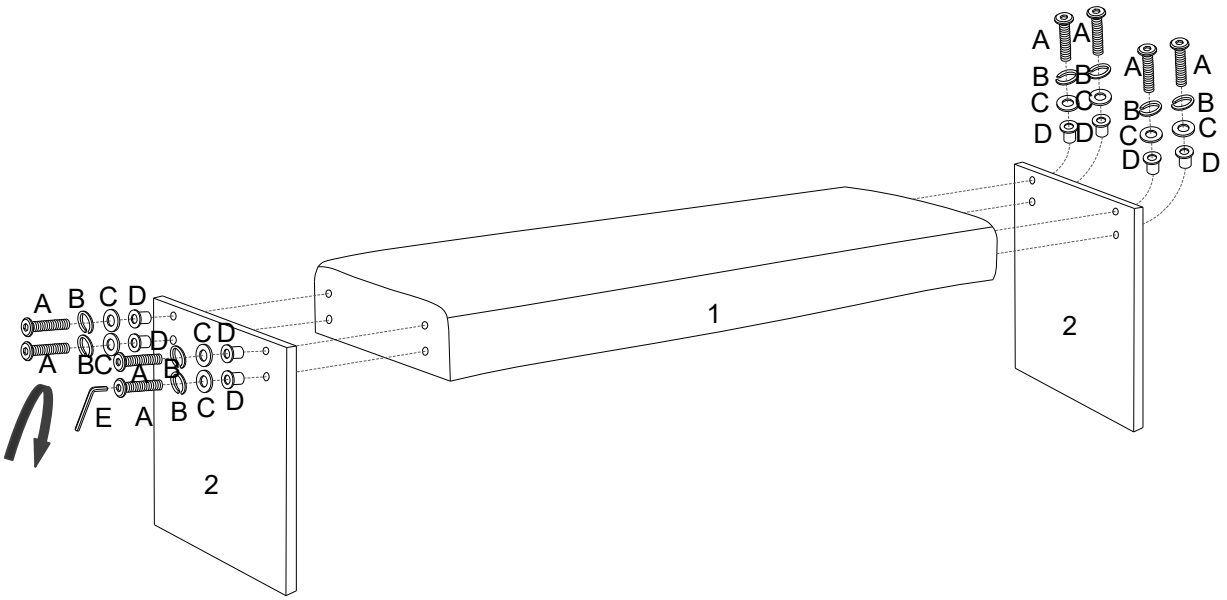

Ax8	Bx8	Cx8	Dx8	Ex1

Hardware & Tool required

STEP 2:

Carefully move the assembled bench to the position your desired.

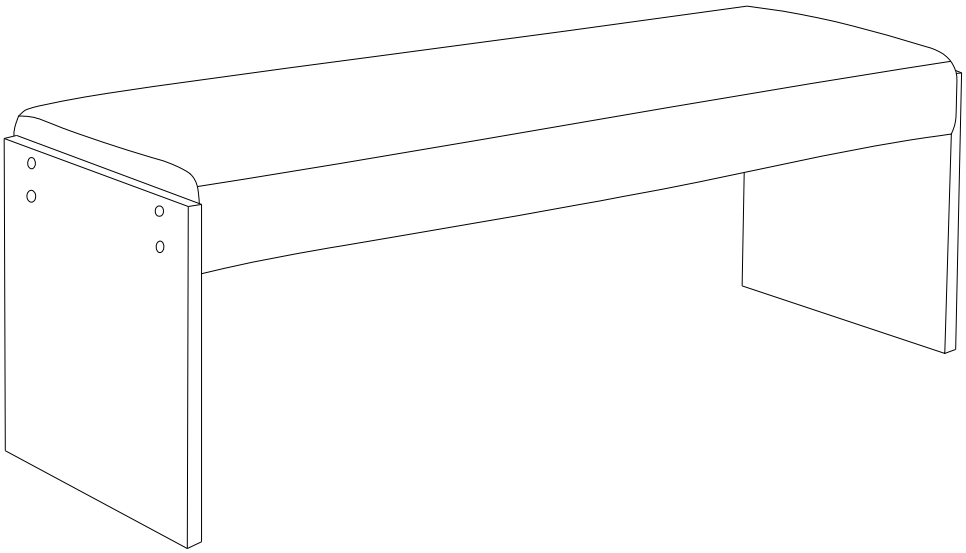

Assembly is completed. Your bench is ready to be enjoyed now!