A X2

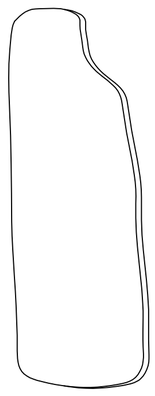

B X1

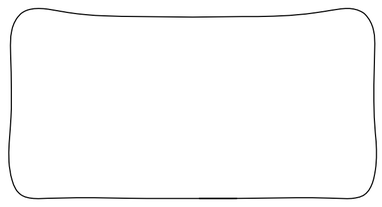

C X1

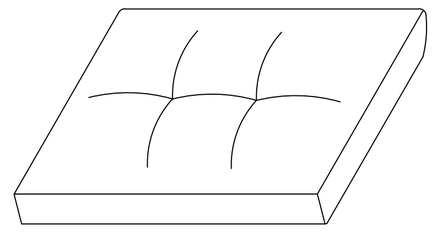

D X1

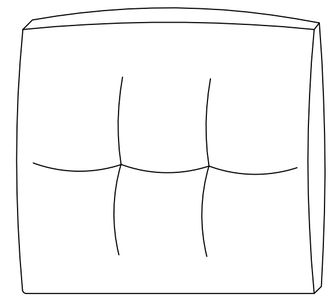

E X1

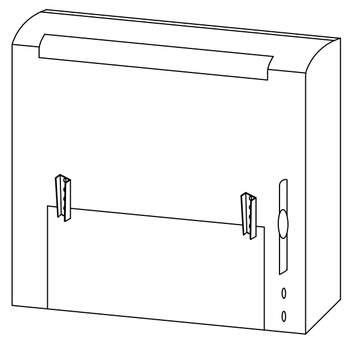

F X1

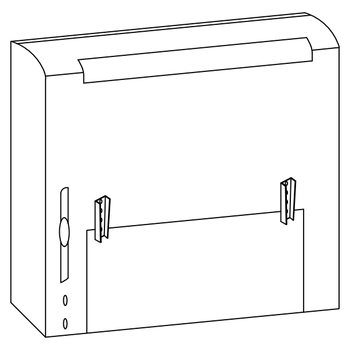

G X1

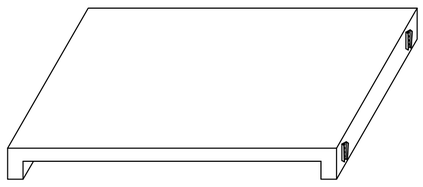

H X1

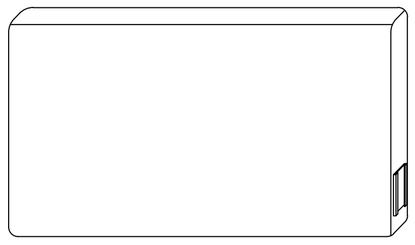

I X1

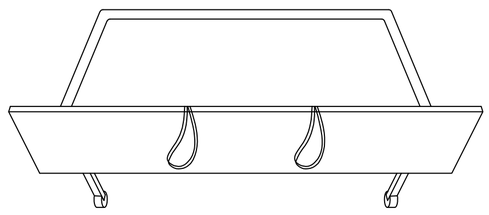

J X8

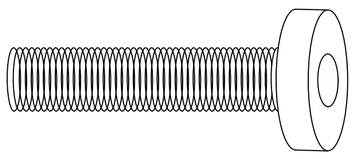

K X1



L X12

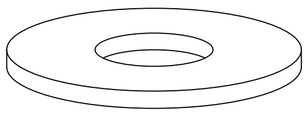

M X4

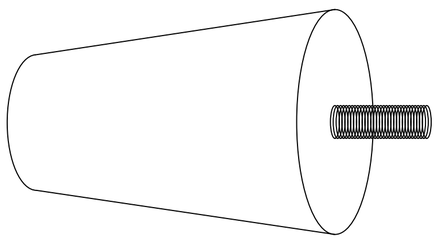

N X1

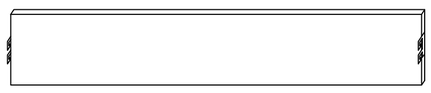

O X1

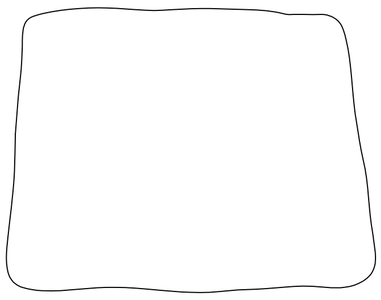

P X4

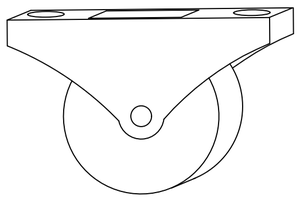

Q X4

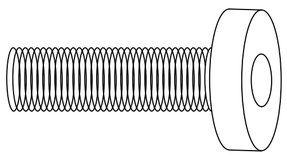

6*16mm

Step 1

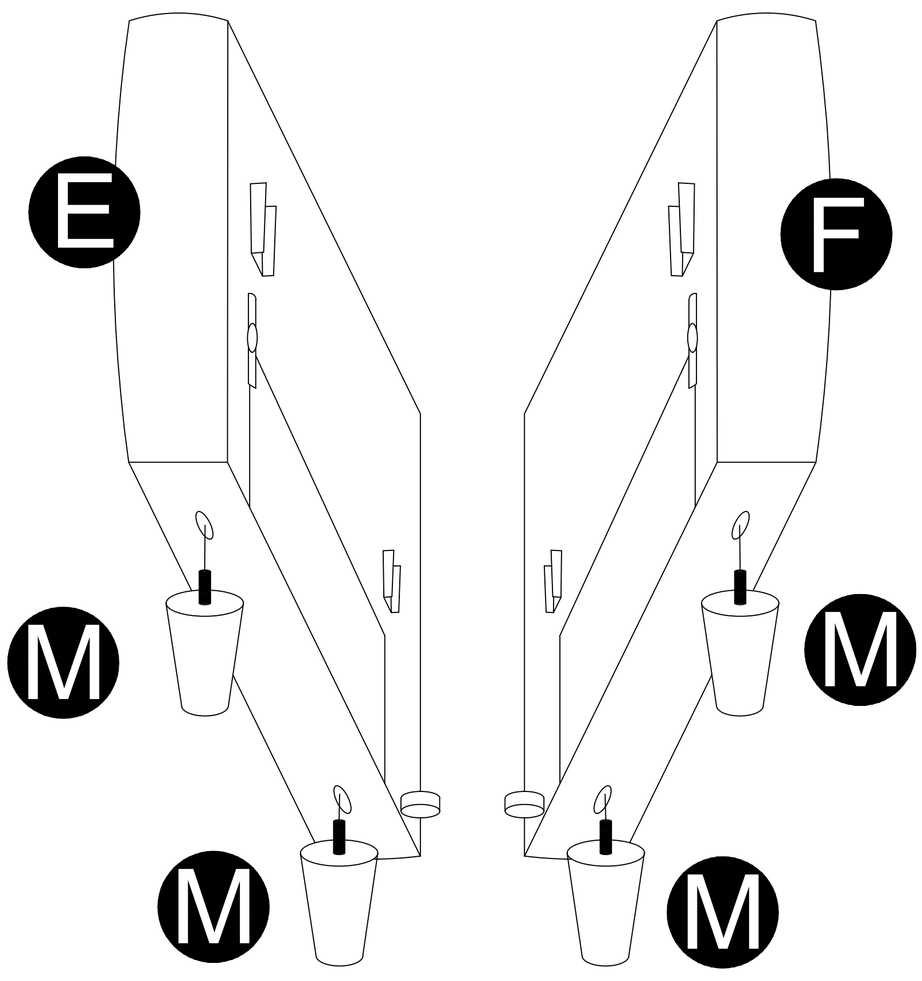

Step 2

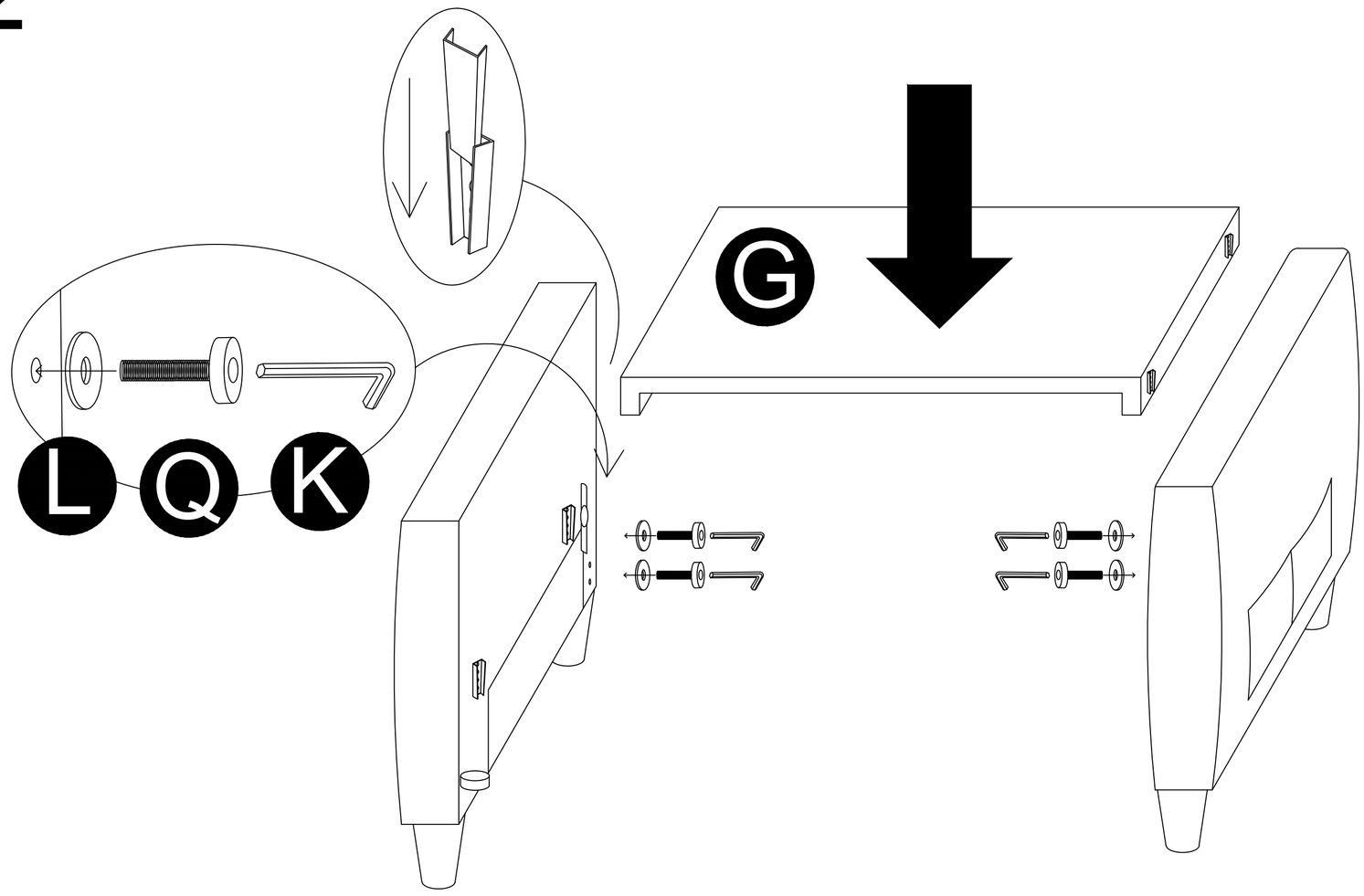

Step 3

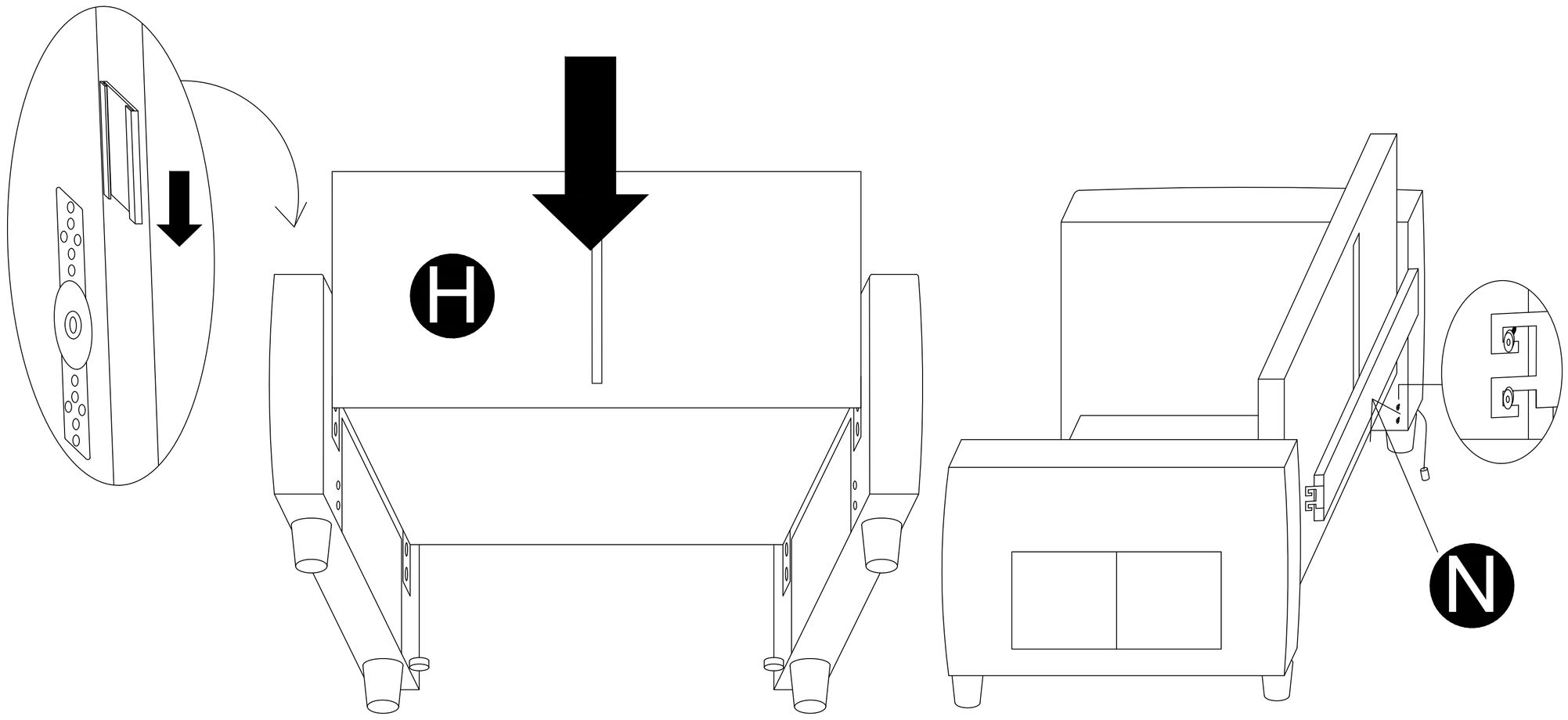

Step 4

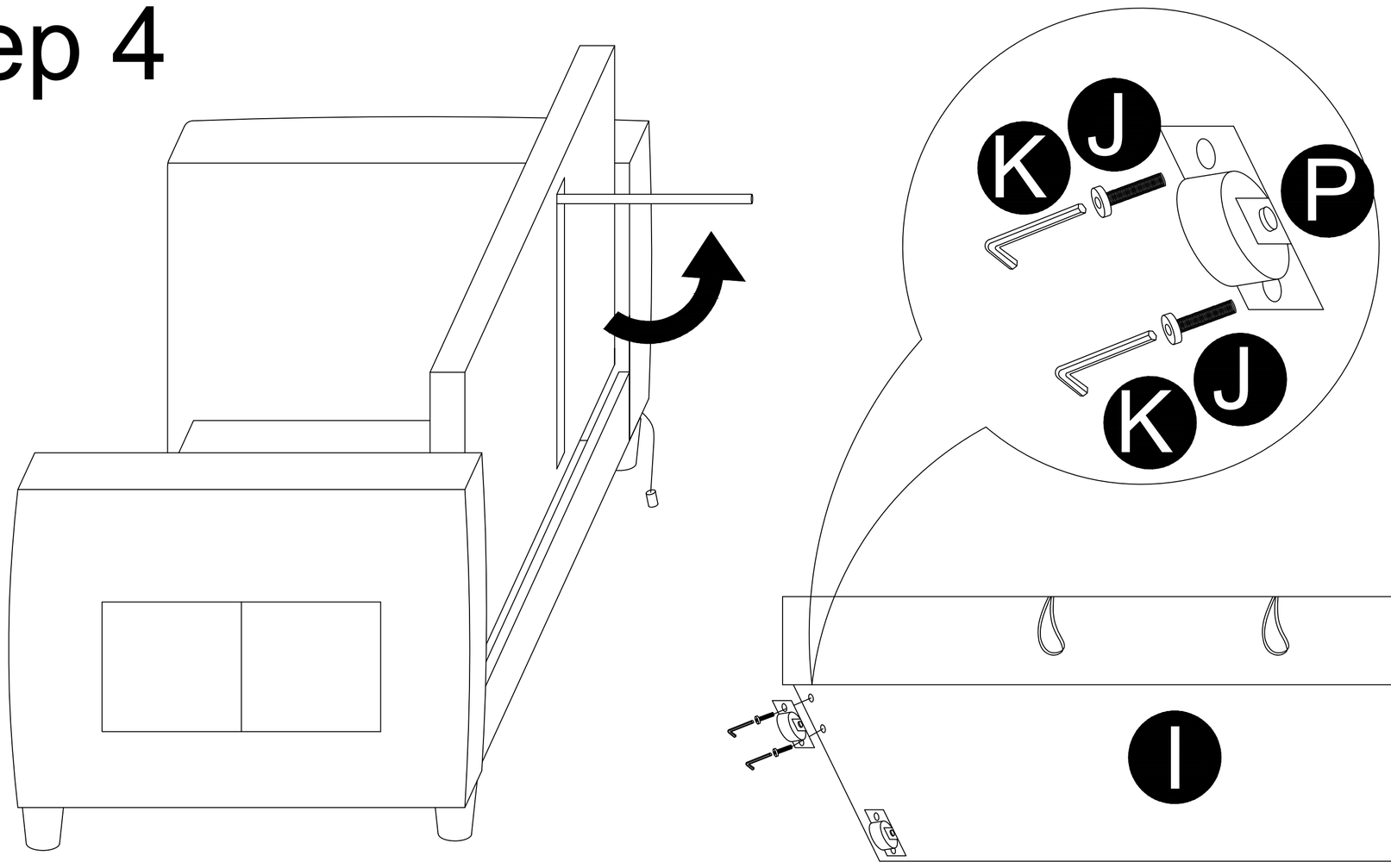

Step 5

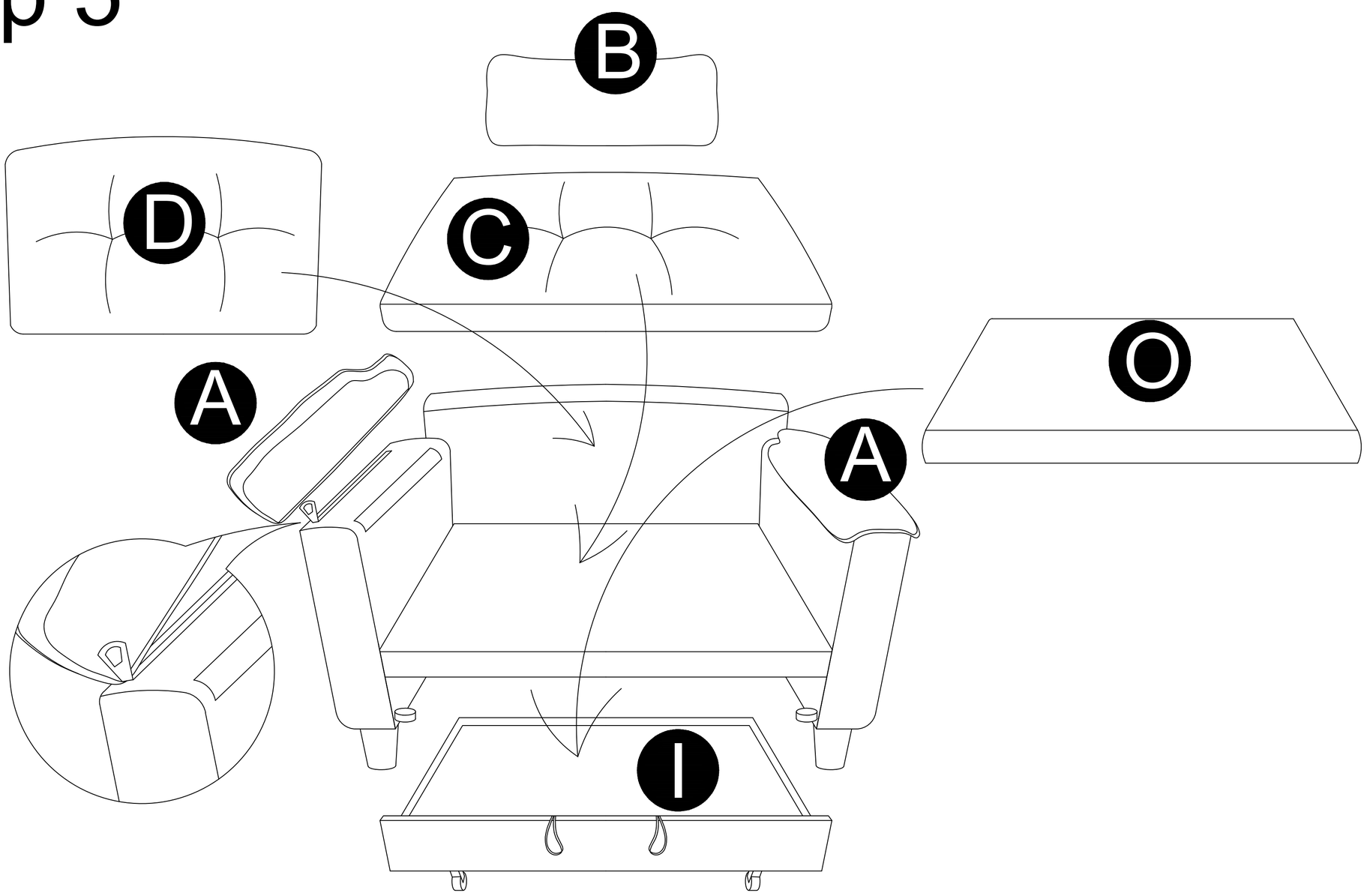

Step 5

