Foldable bookshelf

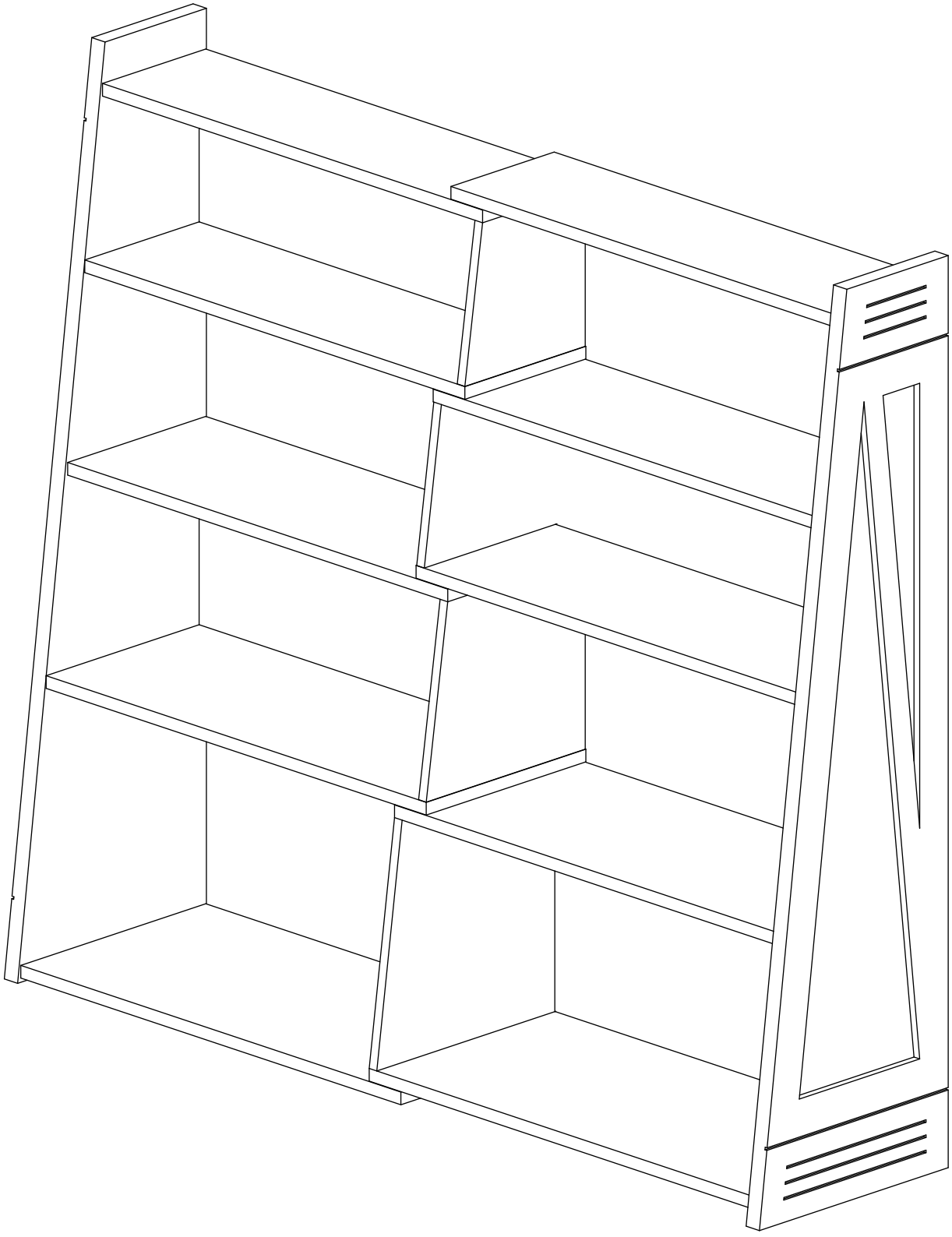

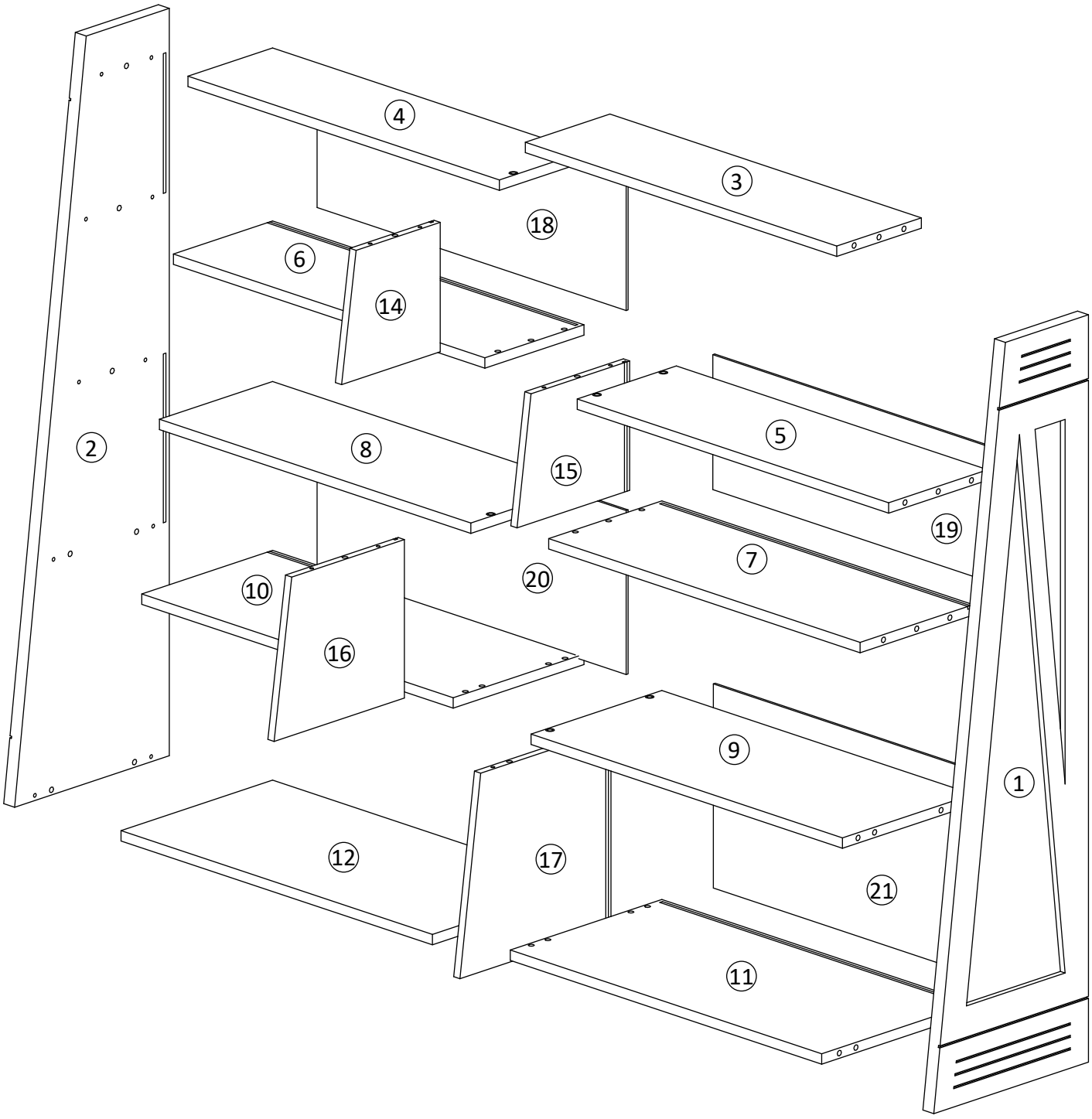
4
3
18
6
14
2
8
15
5
19
7
20
10
16
9
1
12
17
21
11

A	M6x35mm	B	φ15*11mm	C	φ8*30mm
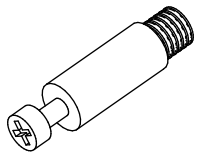 x 20		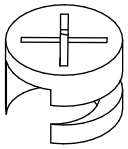 x 20		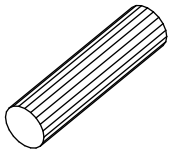 x 25	
D	M5*38mm	**E**			
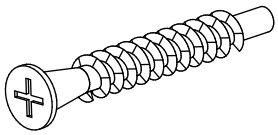 x 16		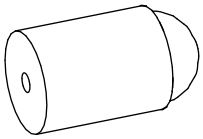 x 2			

STEP 1

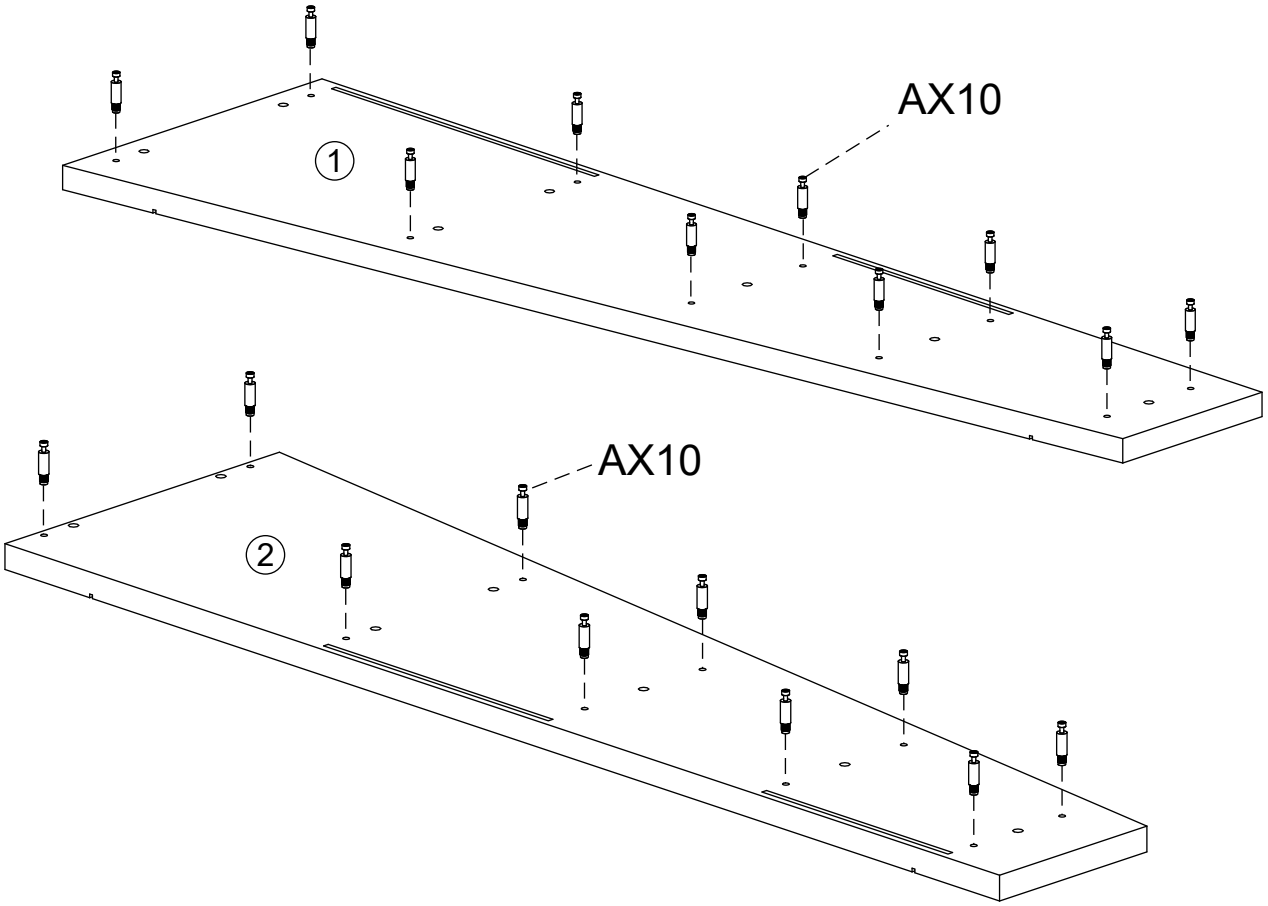

	AX20

STEP 2

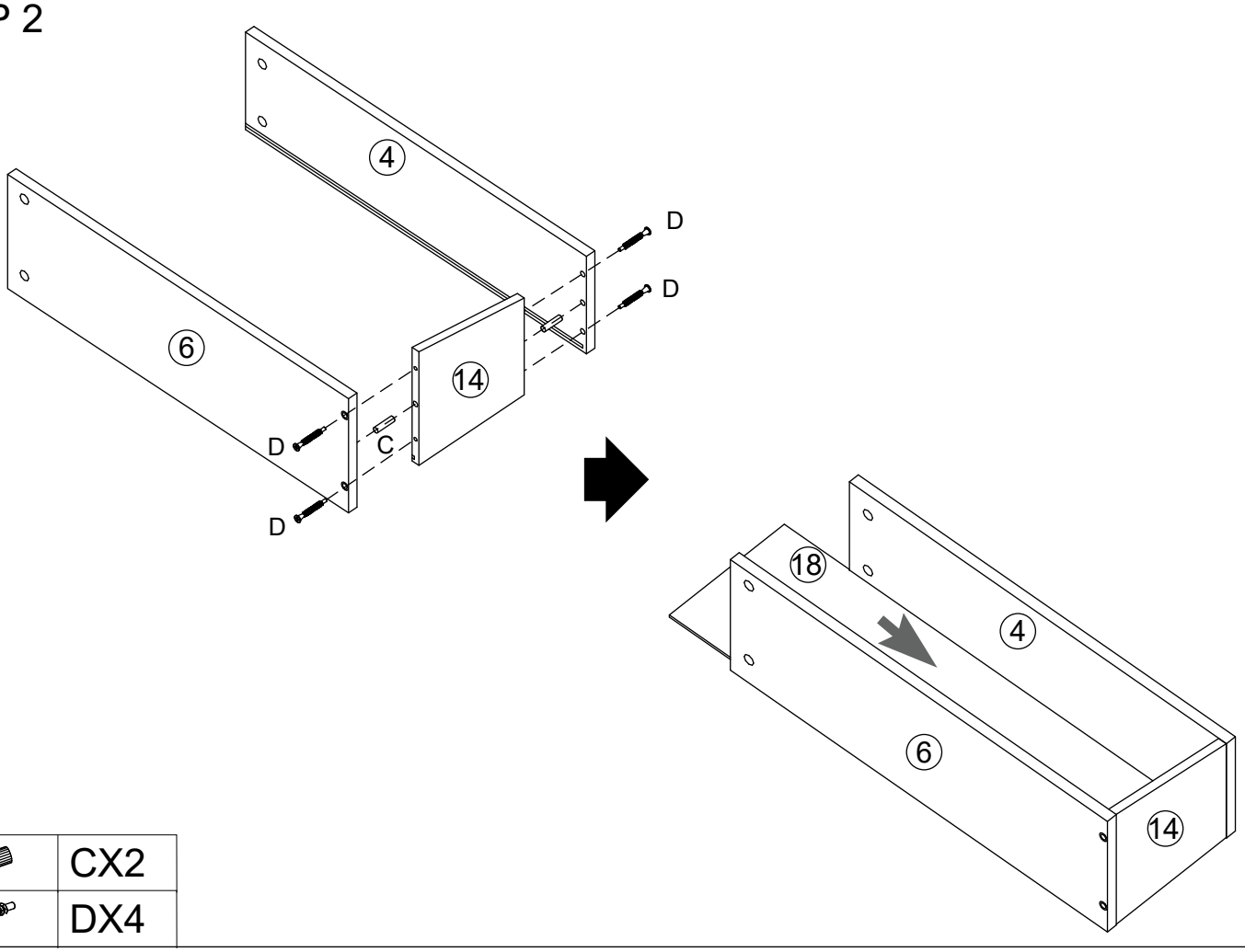

	CX2
	DX4

STEP 3

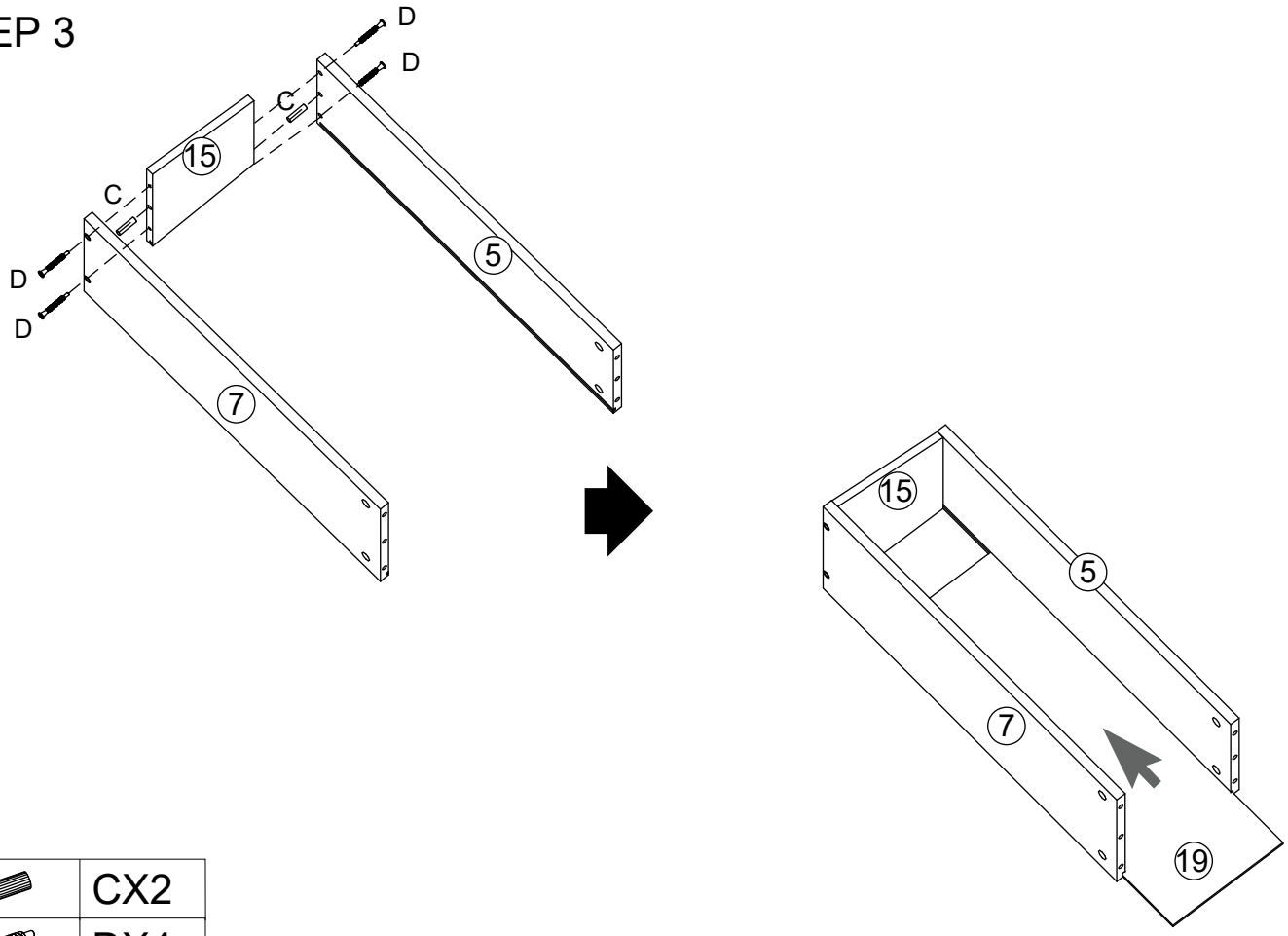

	CX2
	DX4

STEP 4

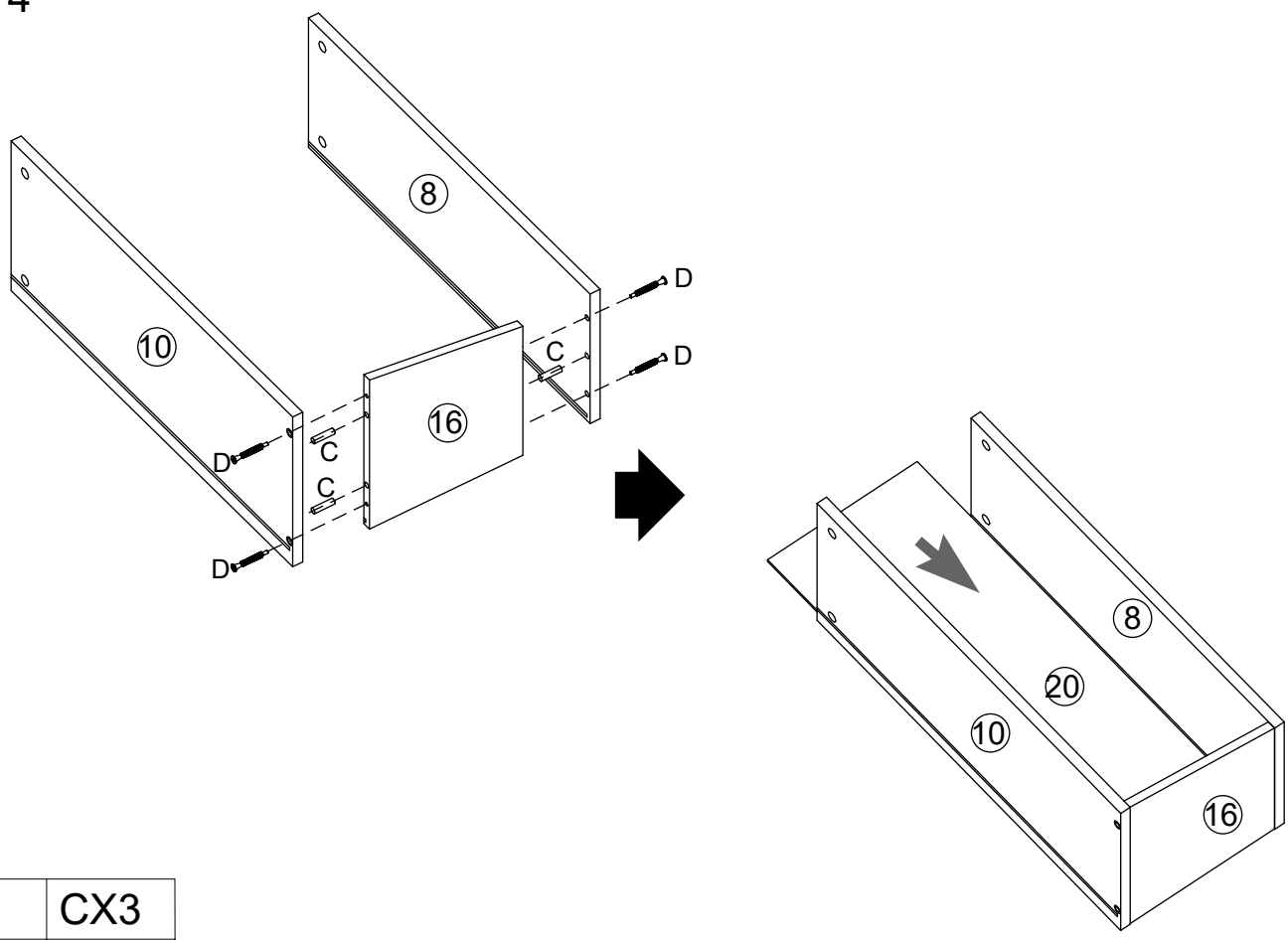

	CX3
	DX4

STEP 5

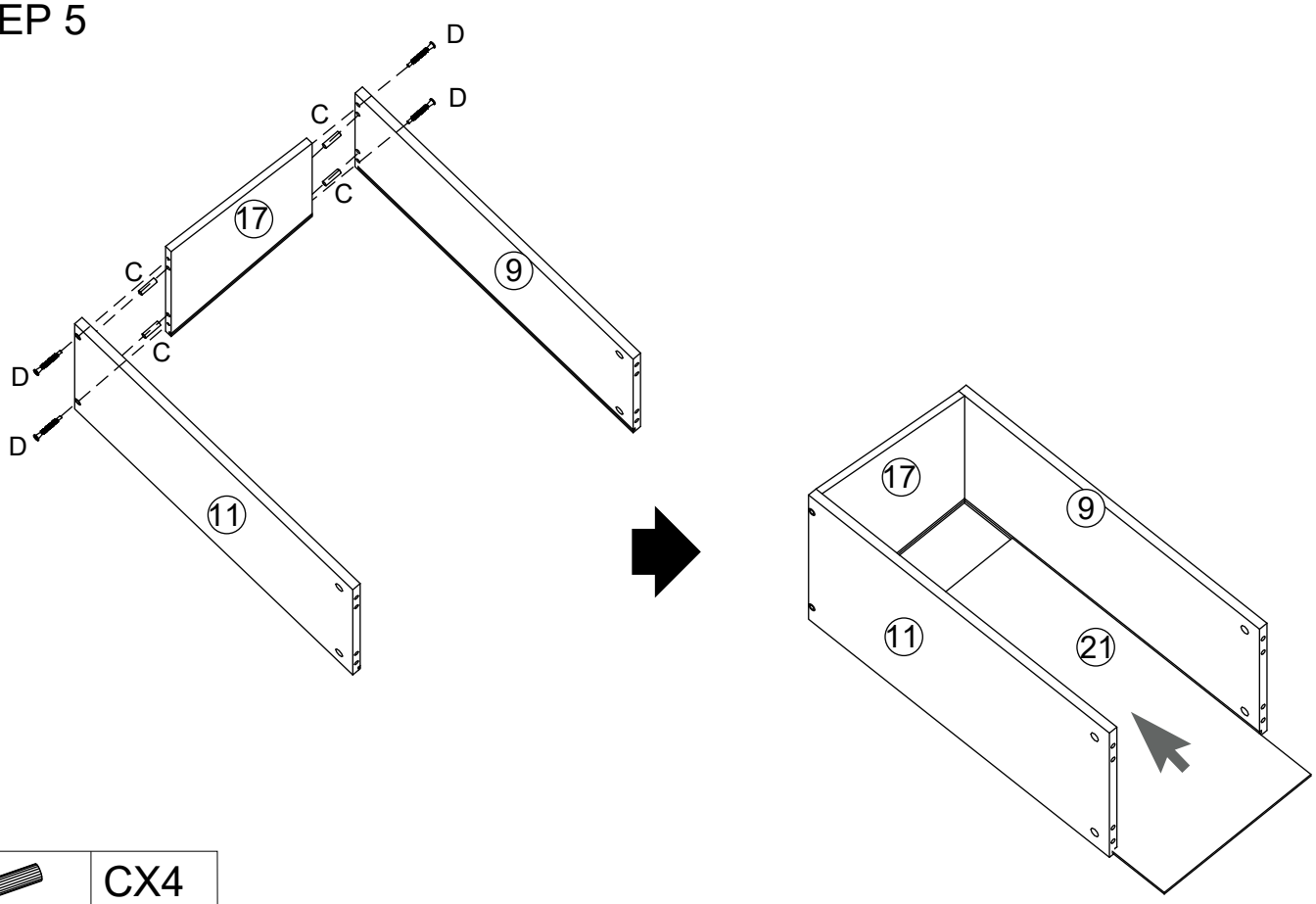

	CX4
	DX4

STEP 6

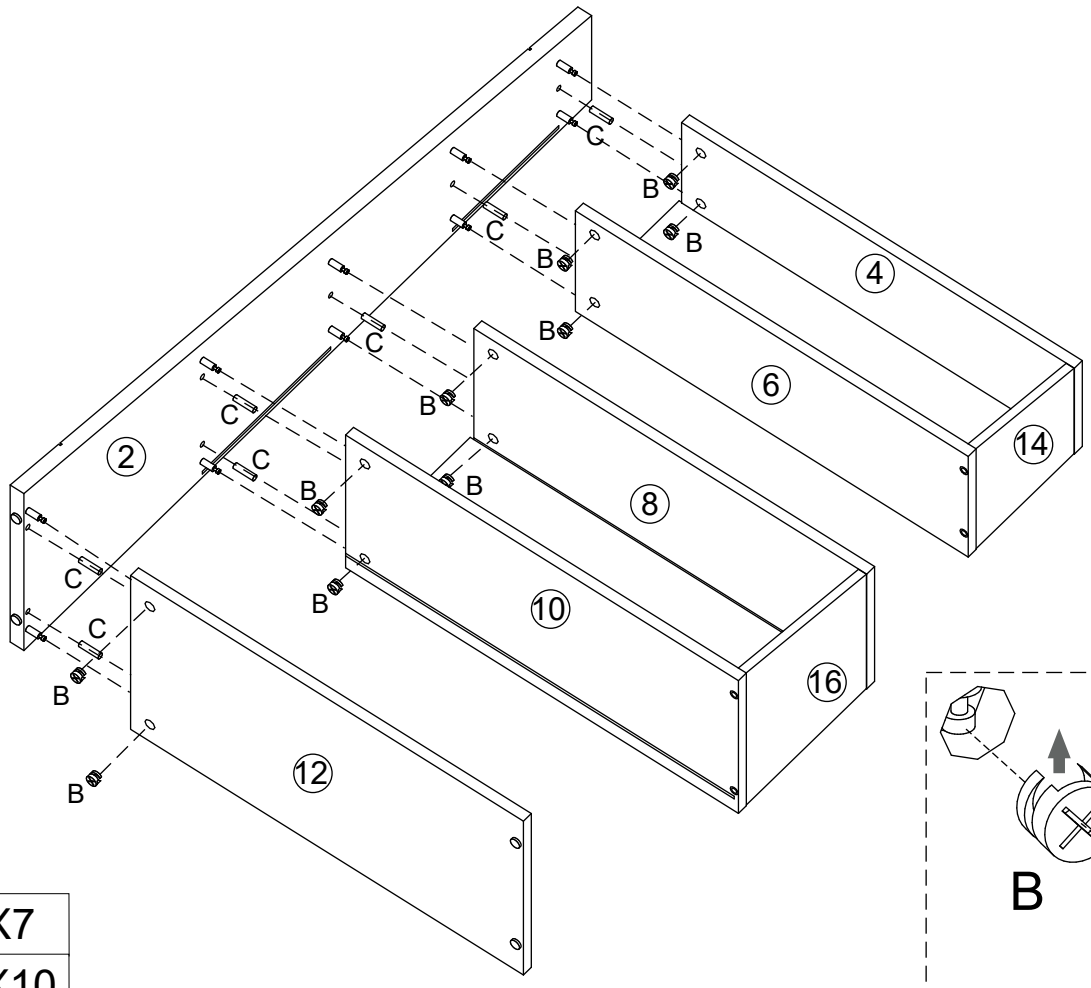

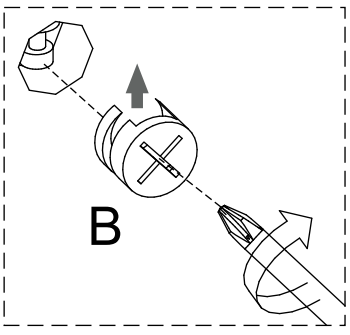

	CX7
	BX10

STEP 7

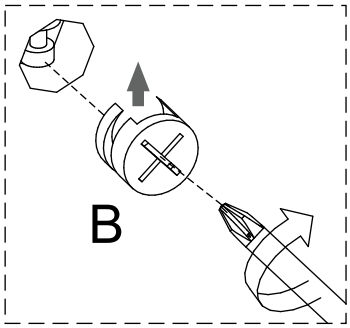

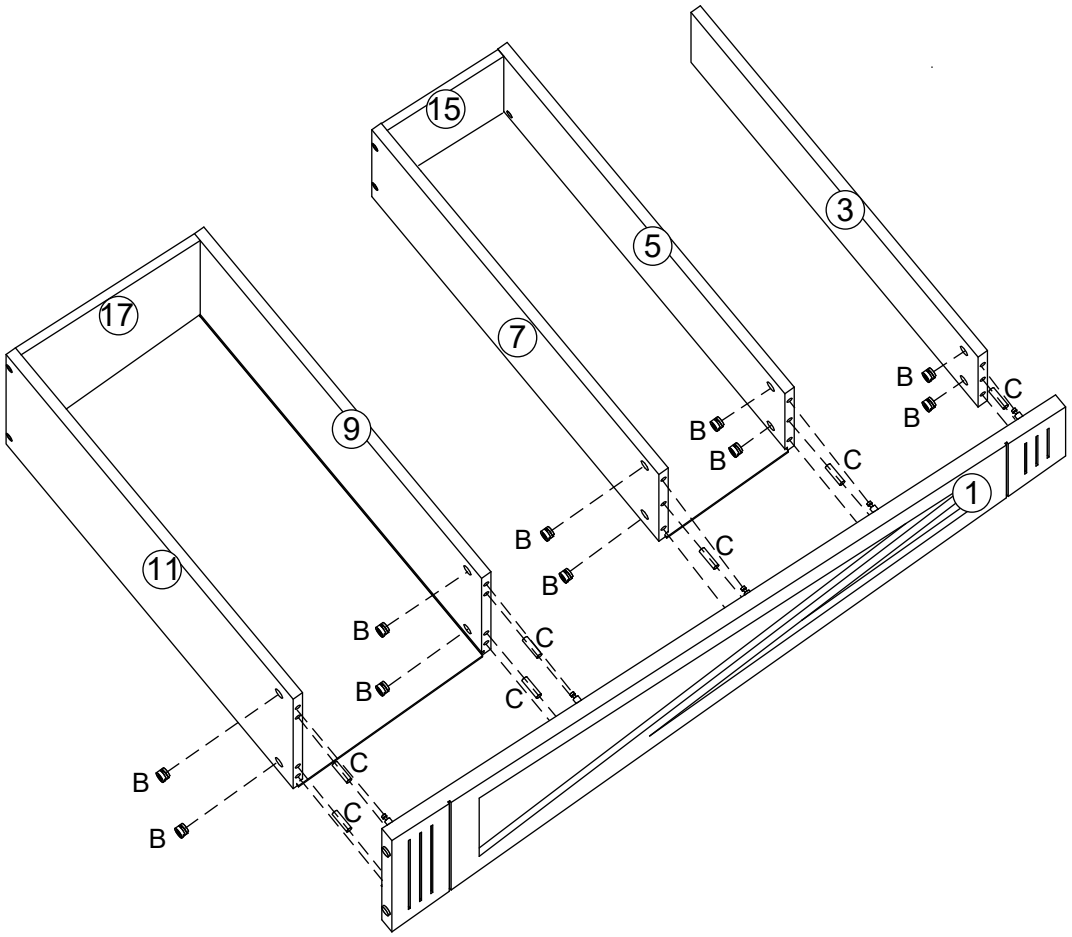

	CX7
	BX10

STEP 8

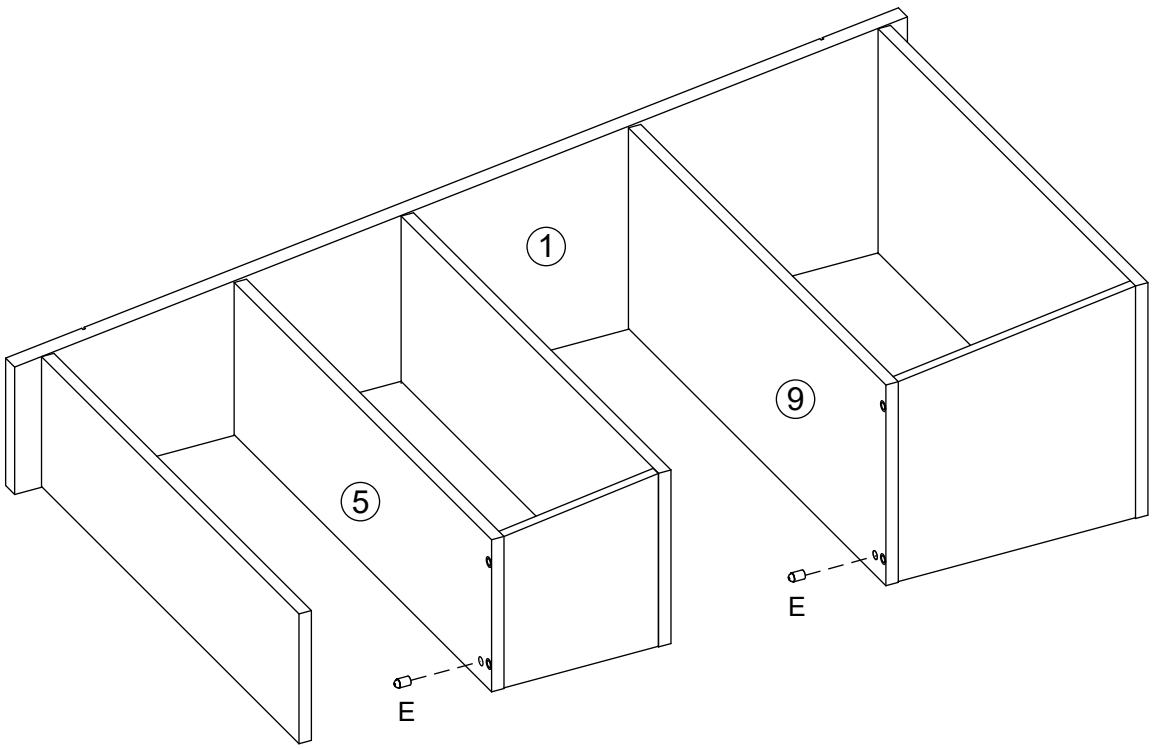

	EX2

STEP 9

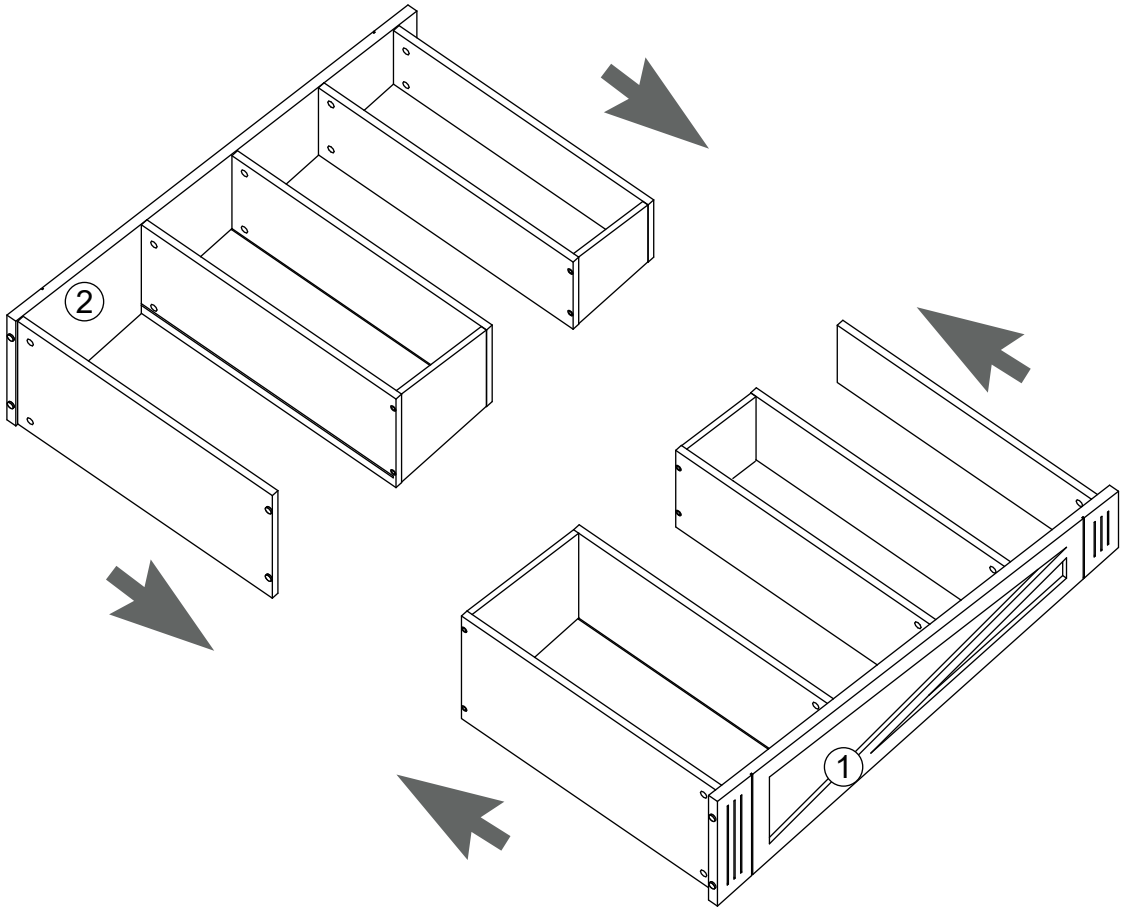

STEP 10

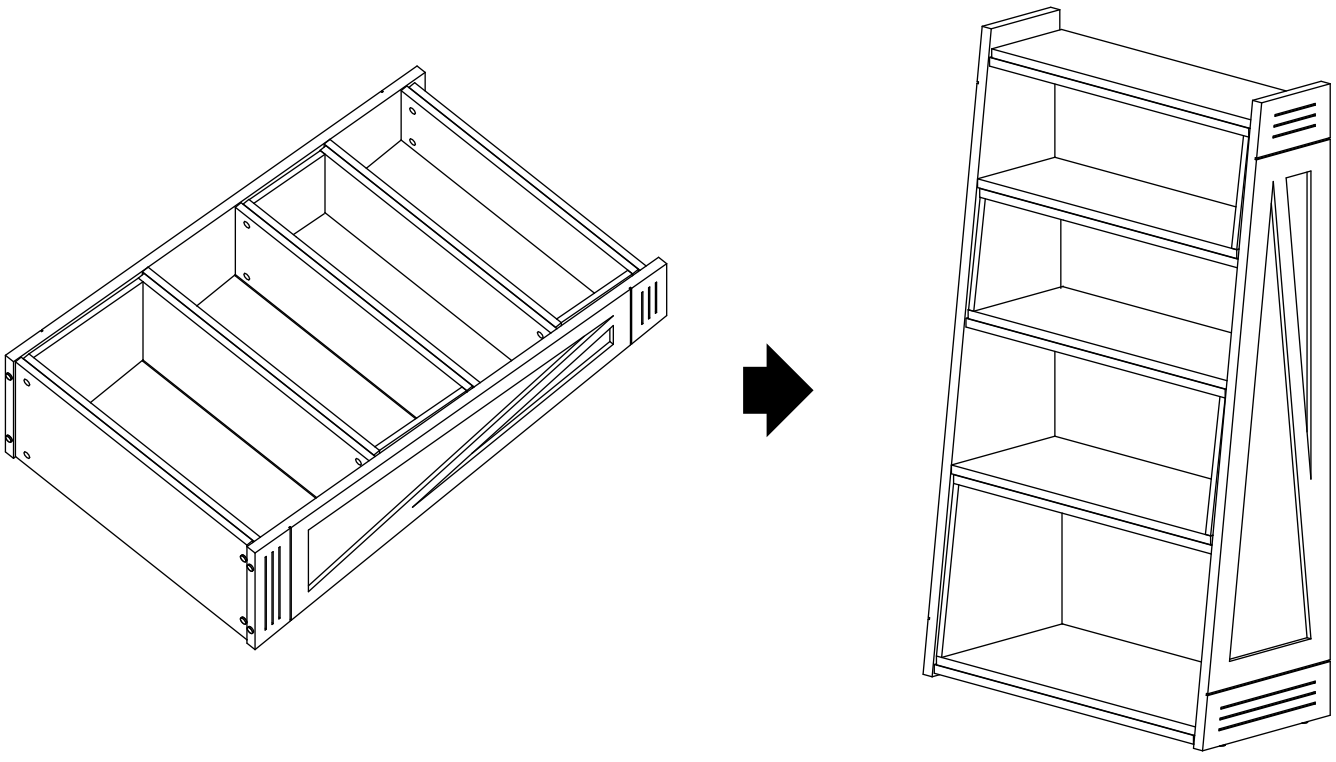

STEP 11

