Owner Manual

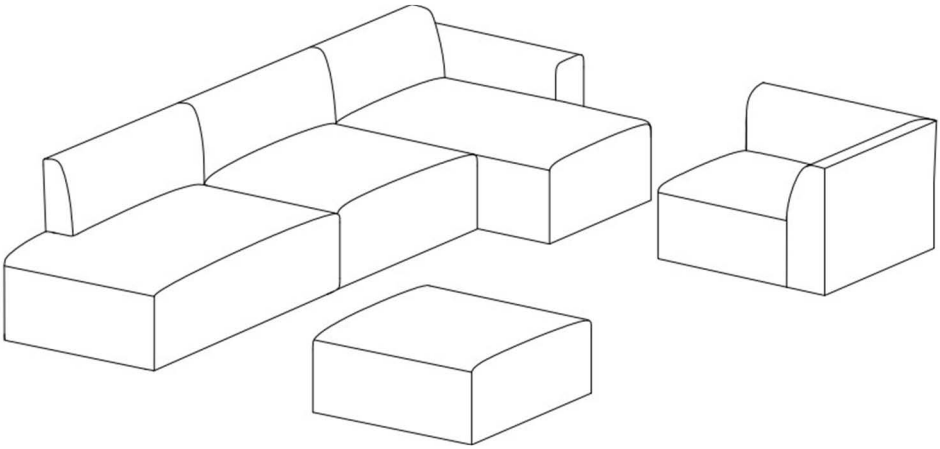

WARRANTY

We strive to offer high quality product and we also try our best to satisfy each customer that order from us, no matter on products or services as needed. Each customer receives a record of their order, such as the order number or item receipt. For any items that are out of warranty period, you may still be able to purchase the replacement parts from our company if they are available.

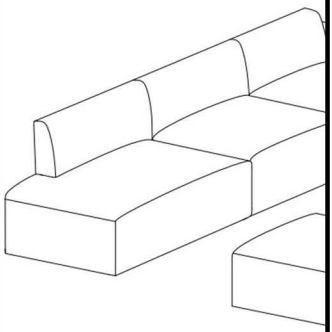

MAINTENANCE AND WARNING

Please read the manual thoroughly before you start installing.

Please keep the product away from sharp object.

Packaging and small parts may have chocking hazard, please keep them away from children and pets.

Please clean the product according to each clean code, check the product description for more information.

Please keep the product away from fire.

If you have any other questions, please contact us, we will be glad to help you out.

If the product is placed under direct sunlight, the pattern or color might fade away overtime.

Check the product periodically to make sure everything is secured and tightened.

Always use proper tools for installation.

Do not jump on the product.

One people

Around 5 min

PRODUCT DESCRIPTION

No Assembly Required: This sofa is crafted entirely from high resilience foam, molded into shape without frames, screws, or tools. Just unbox and let it expand for 72 hours.

All Foam Construction: Built with premium, high density foam, ensuring a plush, supportive seating experience that adapts to your body.

Durable Corduroy Fabric: Soft, breathable, and easy to maintain, offering a cozy feel while withstanding daily use.

If combining multiple units, simply place them tightly together in your desired arrangement.

Heavy Duty Support: With a 400 lb capacity per section, this sofa is as sturdy as it is comfortable. Perfect for lounging, movie nights, or gatherings.

VARIOUS SOFA MODULES

This product is entirely crafted from high-resilience sponge and vacuum-compressed for packaging. After opening the packaging, allow it to rest undisturbed for 72 hours until its shape and support strength are fully restored before use.

The product delivers an exceptional user experience. During use, temporary deformation may occur, but this poses no safety risks or structural damage. The sofa will naturally regain its original form after use—this is an inherent characteristic of the product, not a defect.

For modular configurations, simply arrange the units tightly together in your preferred layout to achieve personalized combinations.

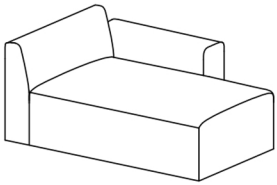

Chaise lounge---left

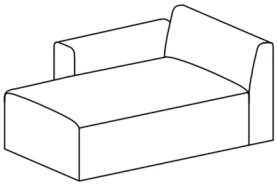

Chaise lounge---right

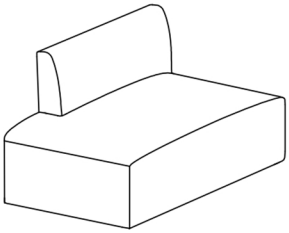

Side chair---right

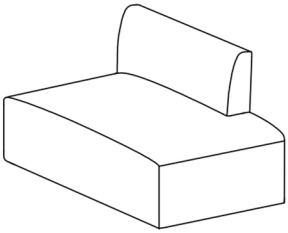

Side chair---left

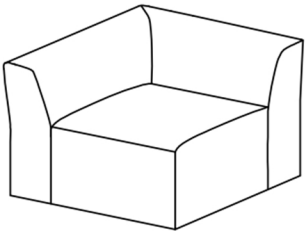

Arm chair

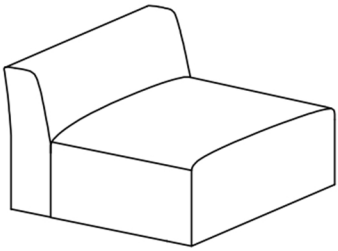

Armless chair

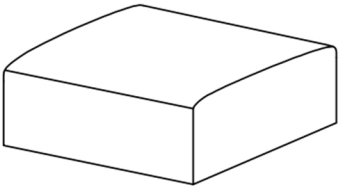

Ottoman

Full sponge products are not easy to dry after absorbing moisture, so please keep away from moist environment.

step 1

Use something sharp to cut the box open.

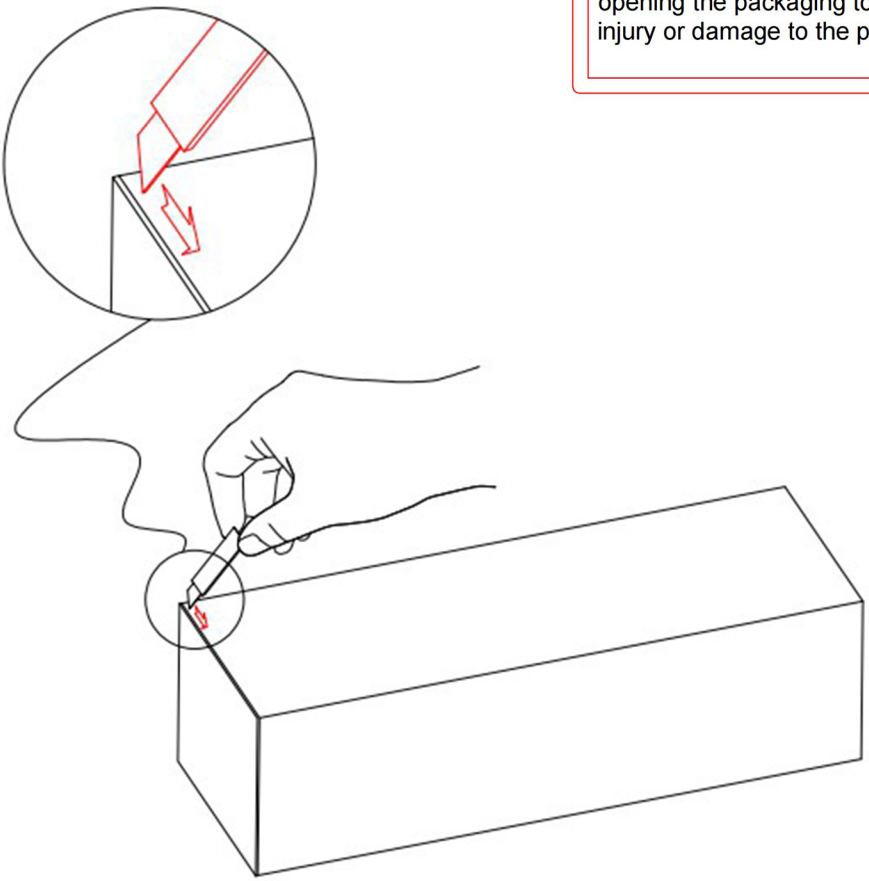

Please exercise caution when opening the packaging to avoid injury or damage to the product.

step2

Take out the roll of compressed product from the box.
Cut open the compression bag along the paper strip on the roll bag. Remove the sofa and let them rest to recover their shape. Full recovery may take up to 72 hours, but you can gently slap the sofa to speed up the process.

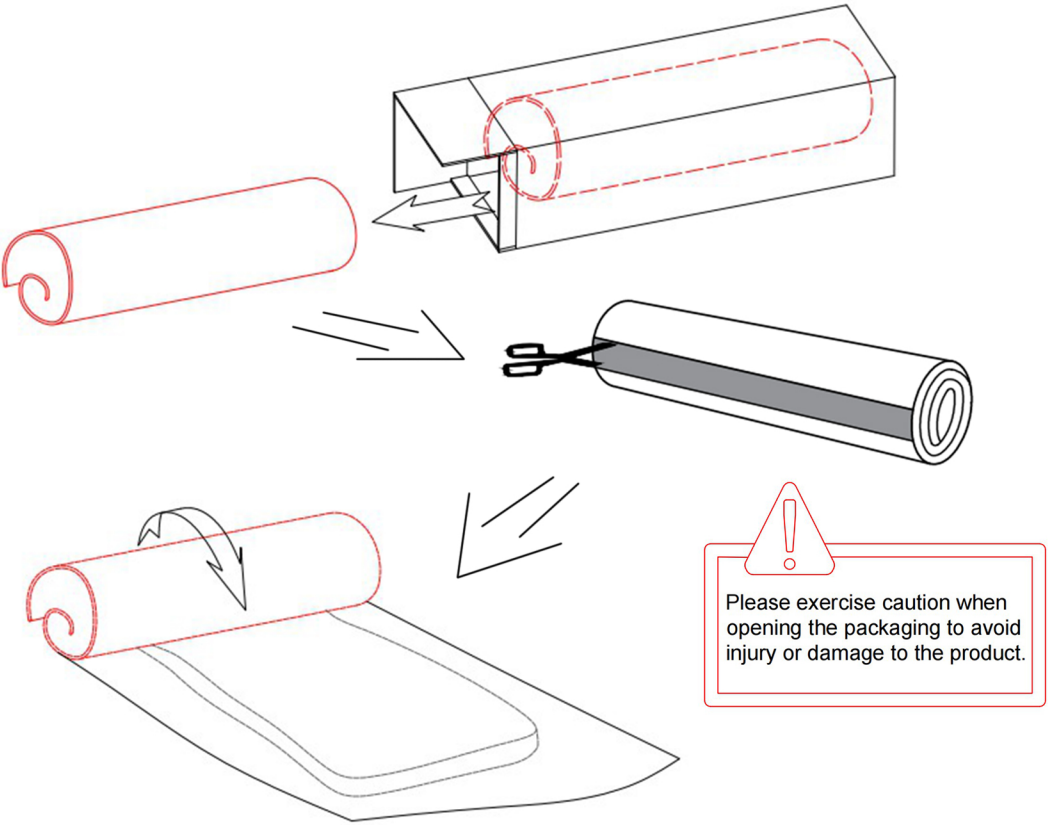

step 3

This series is made entirely from air-compressed foam. The sofa may feel too soft or under-inflated immediately after unpacking. Please allow at least 72 hours for the foam to fully expand and regain its intended shape and firmness before use.

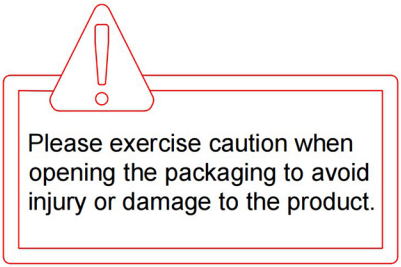

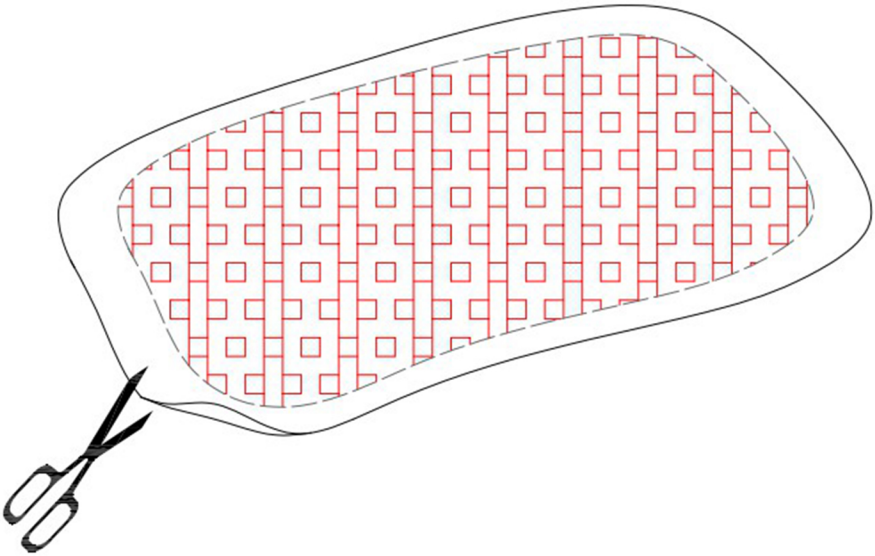

NOTICE

The product requires at least **72 HOURS** to return to its original shape after being removed from the air compression bag.
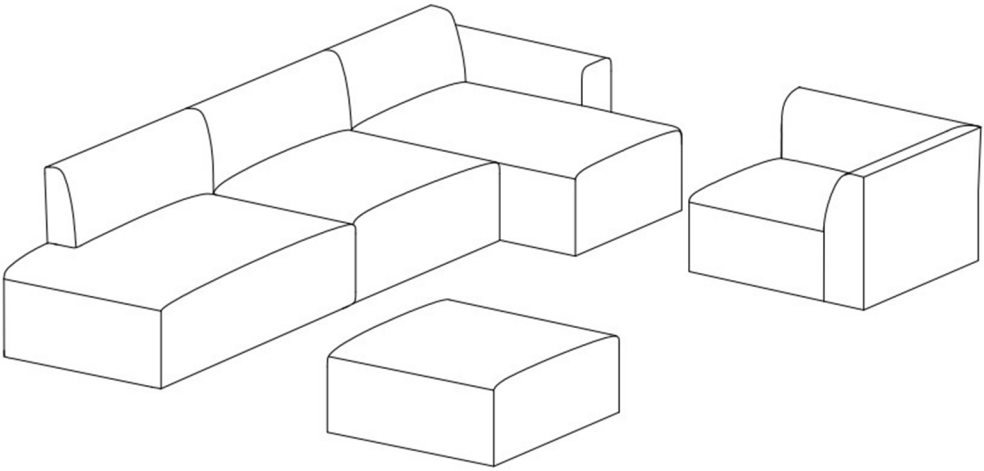
The restore period is **IMPORTANT** for the product please try not to use it while restoring.