NOTE:The hardware packaging is in a yellow paper bag and hung at both ends of the box.If you cannot find it, please try searching on the inside of both ends of the box.

FZCY026

ASSEMBLY INSTRUCTION

Attention:Do not tighten the screws until all of them are in right positions
Please contact us If you are missing any of theparts,or if you have a damaged part,
Please let us know the part number,we will offer good solution asap.
Customer service E-mail:cservice7@yeah.net
Please attach your Order ID so that we can assist you better.

① **X1**

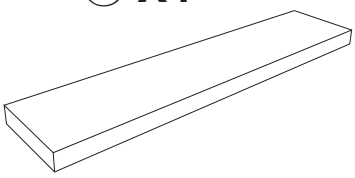

② **X6**



③ **X1**

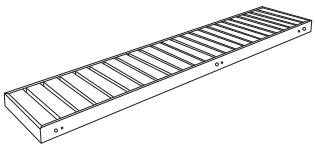

A X18
M6x35



B X18



Cx1



Dx6



STEP 1


A X12
M6x35


B X12

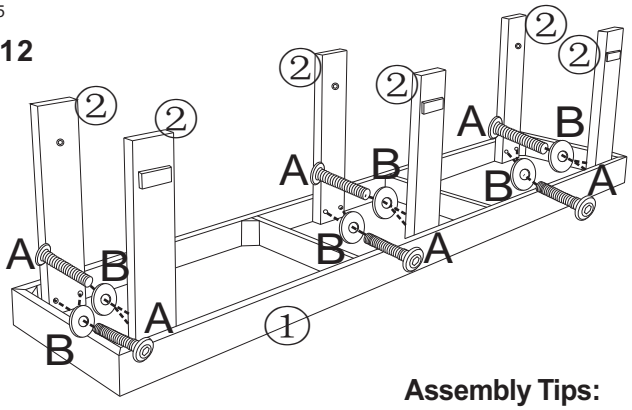

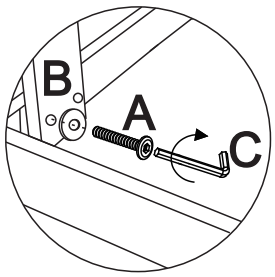

Assembly Tips:
You must not tighten any screw yet in this step

STEP 2


A X6
M6x35


B X6

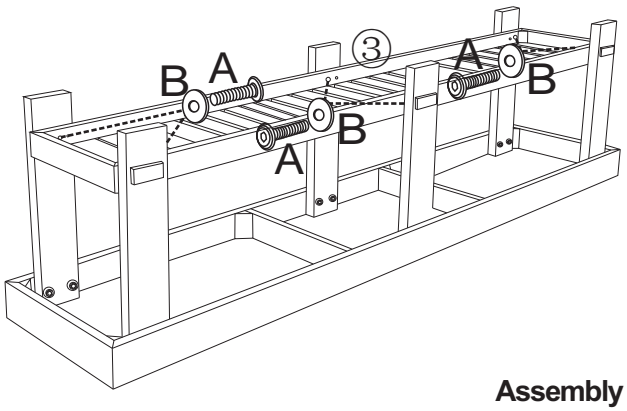

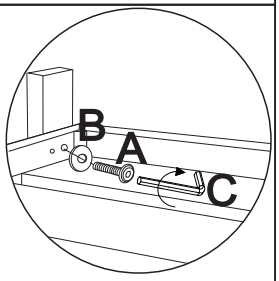

Assembly Tips: When every part is OK, You can tighten all screws in this step.

STEP 3


D X6

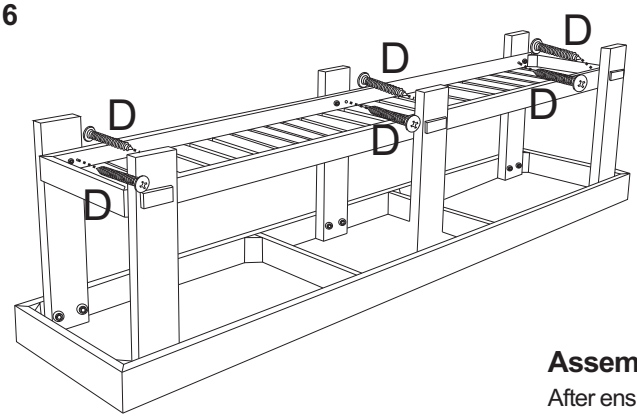

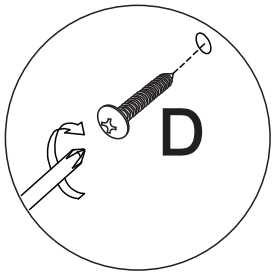

Assembly Tips:
After ensuring that the 4 feet are vertical, reinforce with 4 self-tapping screws D.