CONVERTIBLE SLEEPER SOFA BED

ASSEMBLY INSTRUCTIONS

MODEL NO.: RYS203

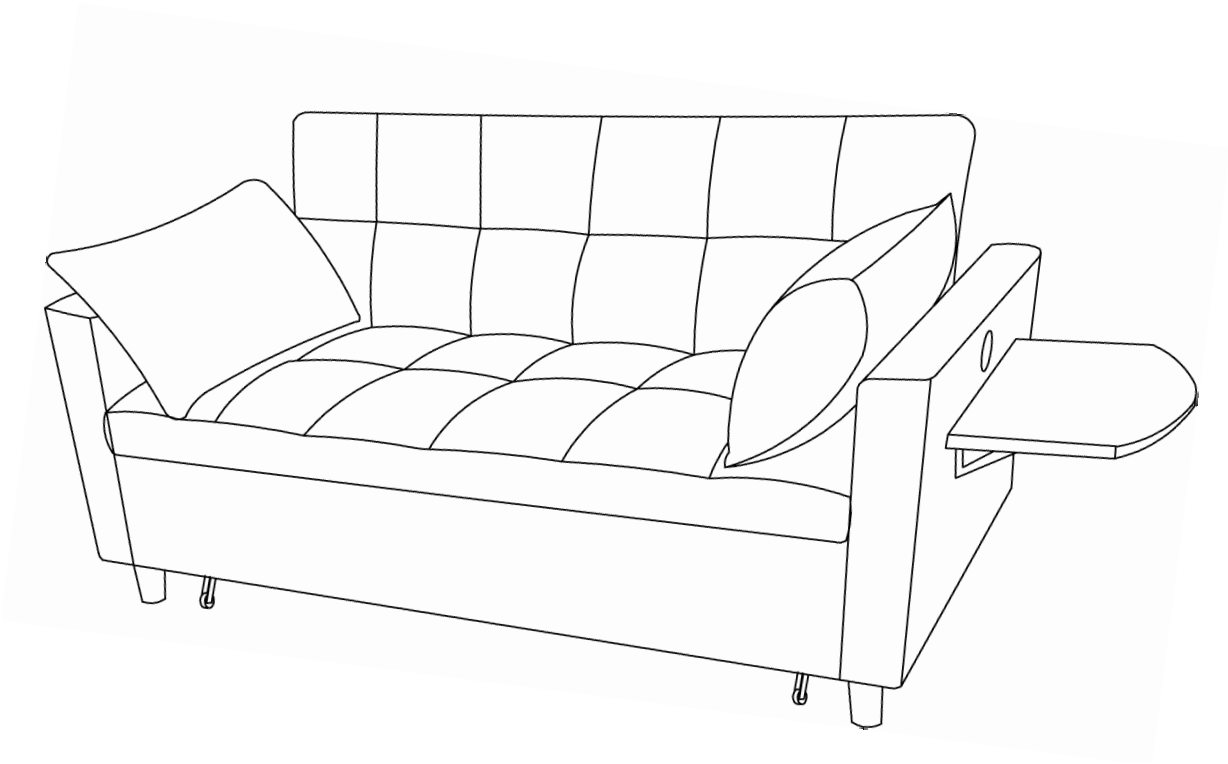

INSTALLATION VIDEO

Please scan QR code with iOS or Android phone camera，
click the link to play the installation video.
If QR code is damaged, please contact us to get installation video.
If no access for cell phone scanner, please try other APP.

202 installation video

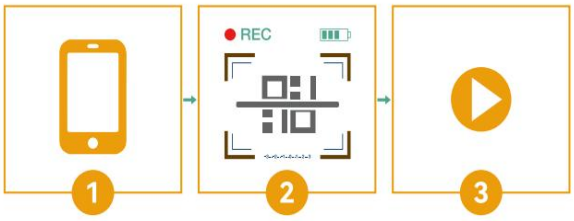

CAUTION:

· Please read the instruction completely before assembly.
· Please do not throw away any of the packaging or the instruction until you have all the components and when the furniture is fully assembled.
· Considering the size and weight of the sofa, we recommend two adults to assemble the sofa, on a carpeted or padded area.
· Keep all components and packaging out of reach of children or animals to avoid risk of choking or suffocation.
· Please keep children away from plastic bag or any small pieces of stuff.
· Cushions should be regularly maintained for perfect use.
· 2 people to install is recommend.
· 2 people to lift the sofa if you want to move it, do not push or pull directly
· You can assemble it with out packaging tools or home electric drill, as shown below,
Electric Drill tool is not included.
Electric drill will improve your assembling efficiency.
You can use it if you have this tool, DO NOT overtight to prevent from damaging screws and slats/boards.

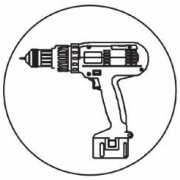

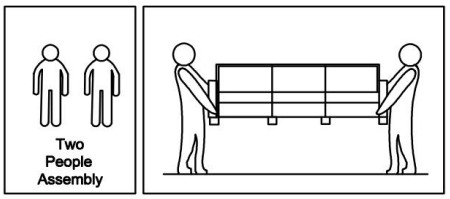

Components:

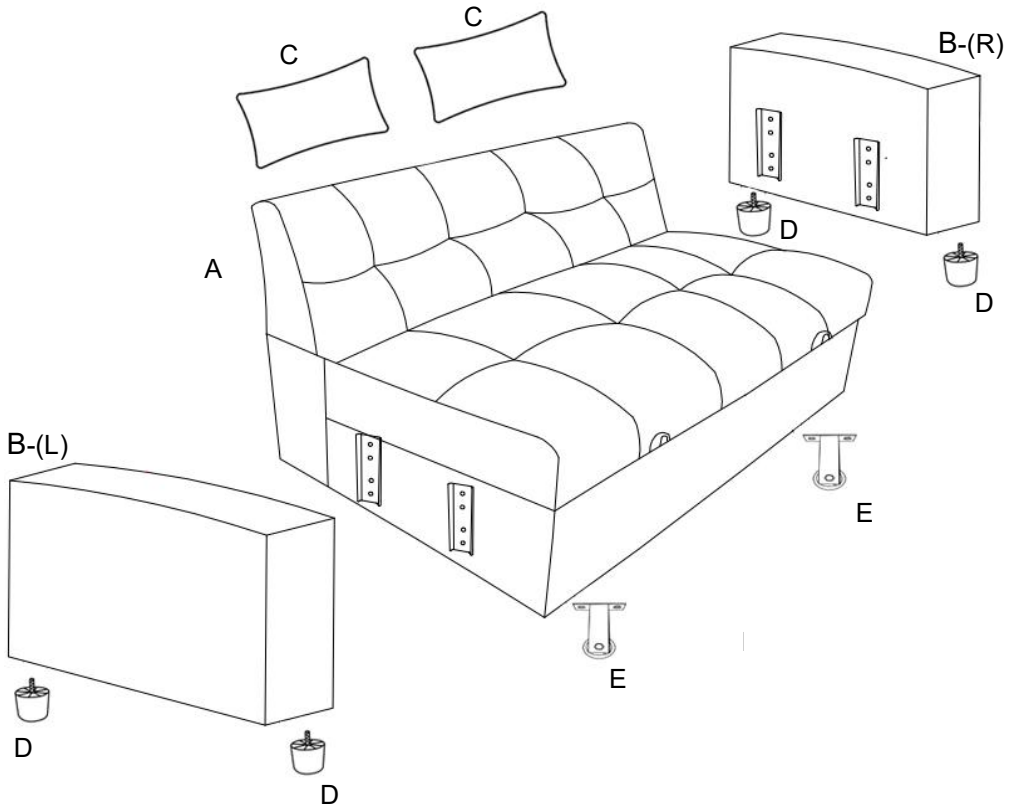

PART LIST & HARDWARE

A

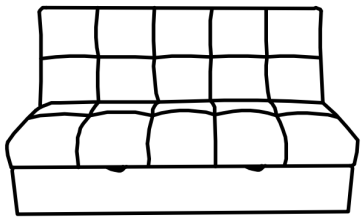

Seat frame 1PC

B

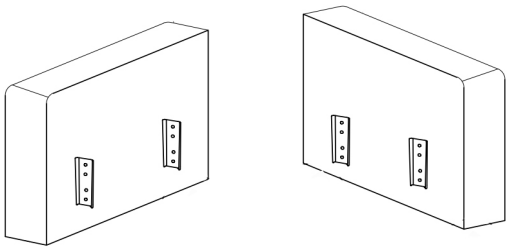

Armrest 2PCS

C

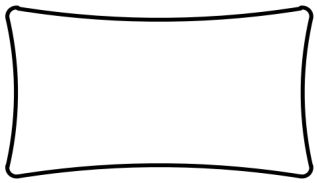

Pillow 2PCS

D



Legs 4PCS

E

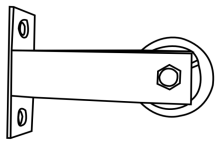

Caster 4PCS

F

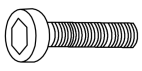

Screw 8PCS

G



Wrench 1PC

H



Washer 8PCS

Step 1, Assemble the casters "E" by bolts “F” and washer "H".

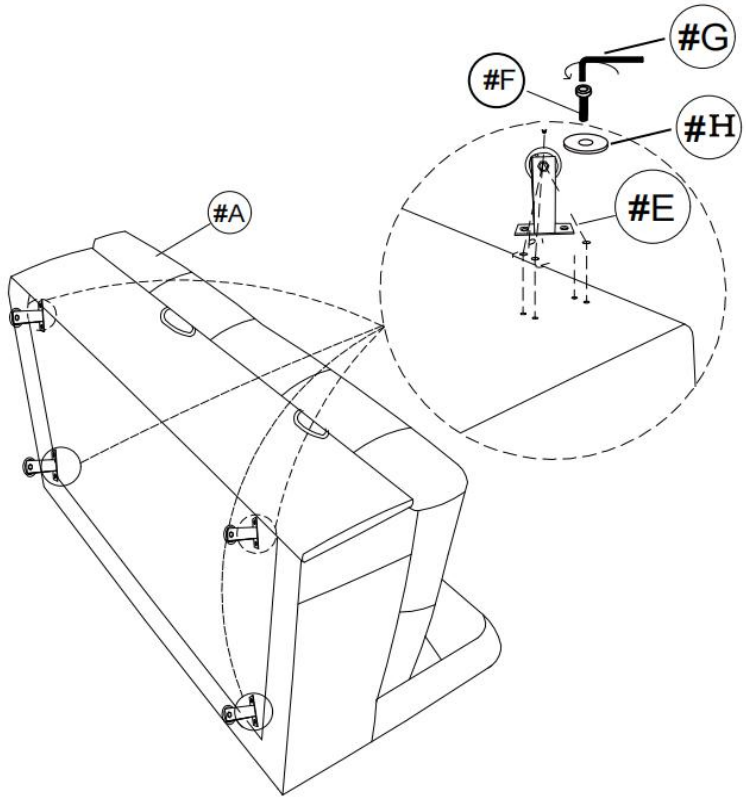

Step 2, Assemble the legs "D" to bottom of armrest "B".

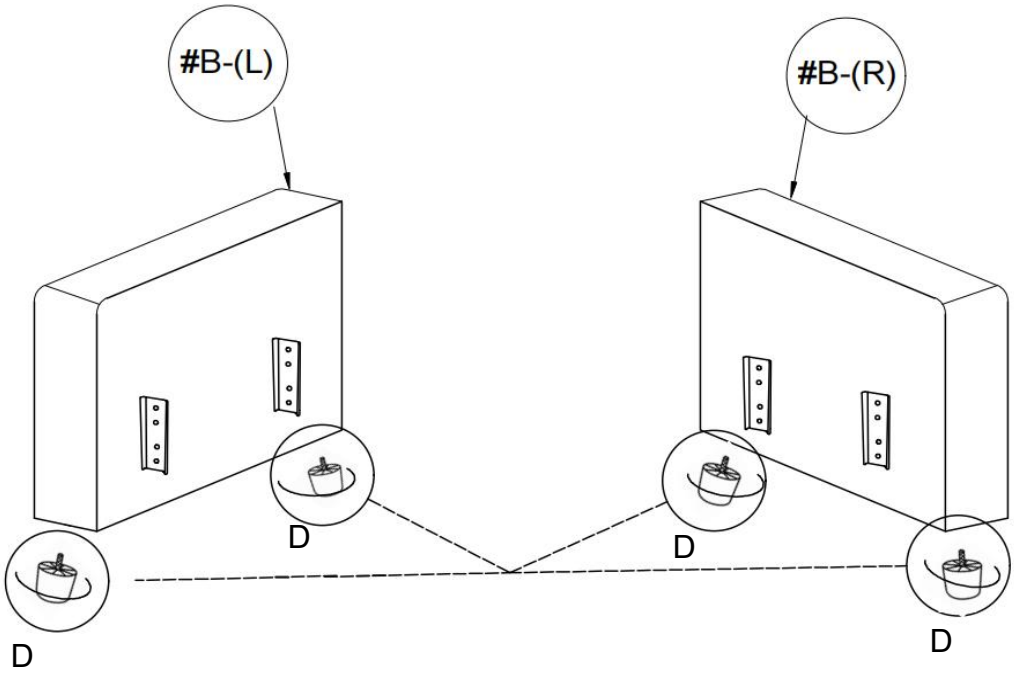

Step 3, Insert the armrest "B" to side of seat frame "A".

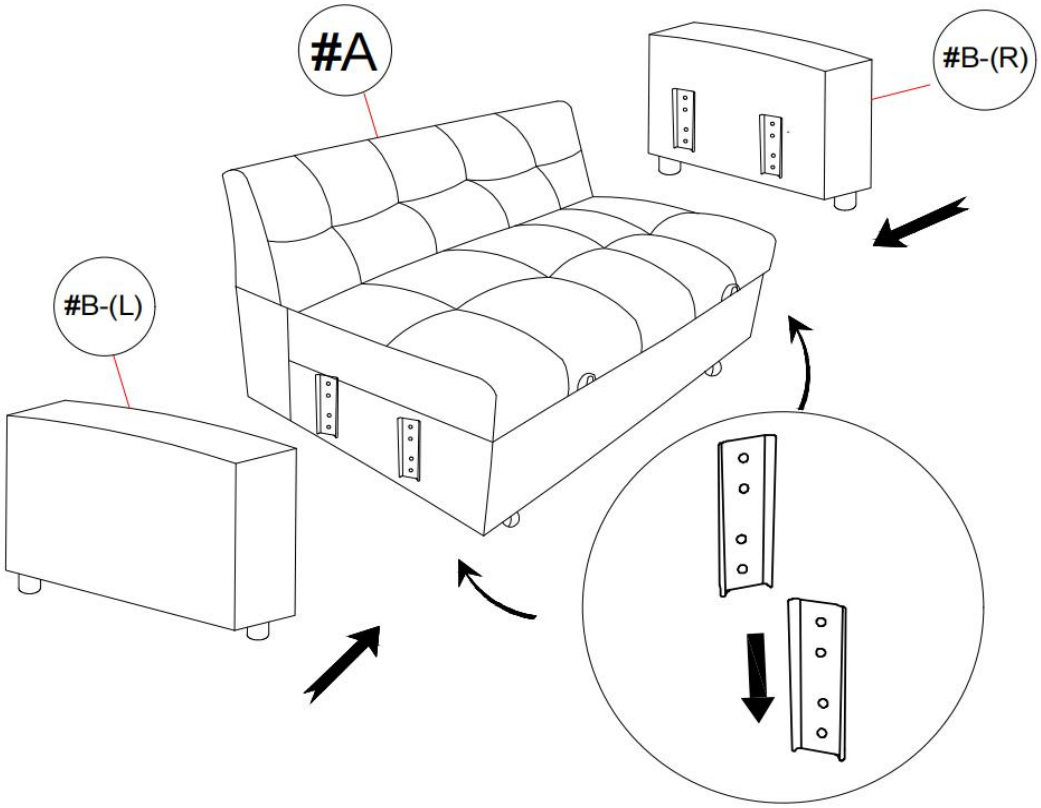

Step 4 Put the pillows on sofa bed, and the assembly is finished.

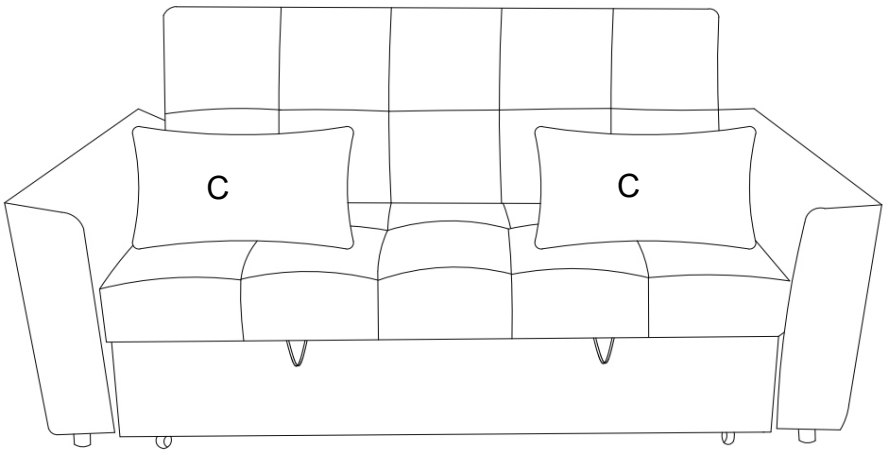

Step 5 Armrest with built-in USB port, plug in and connect the power.

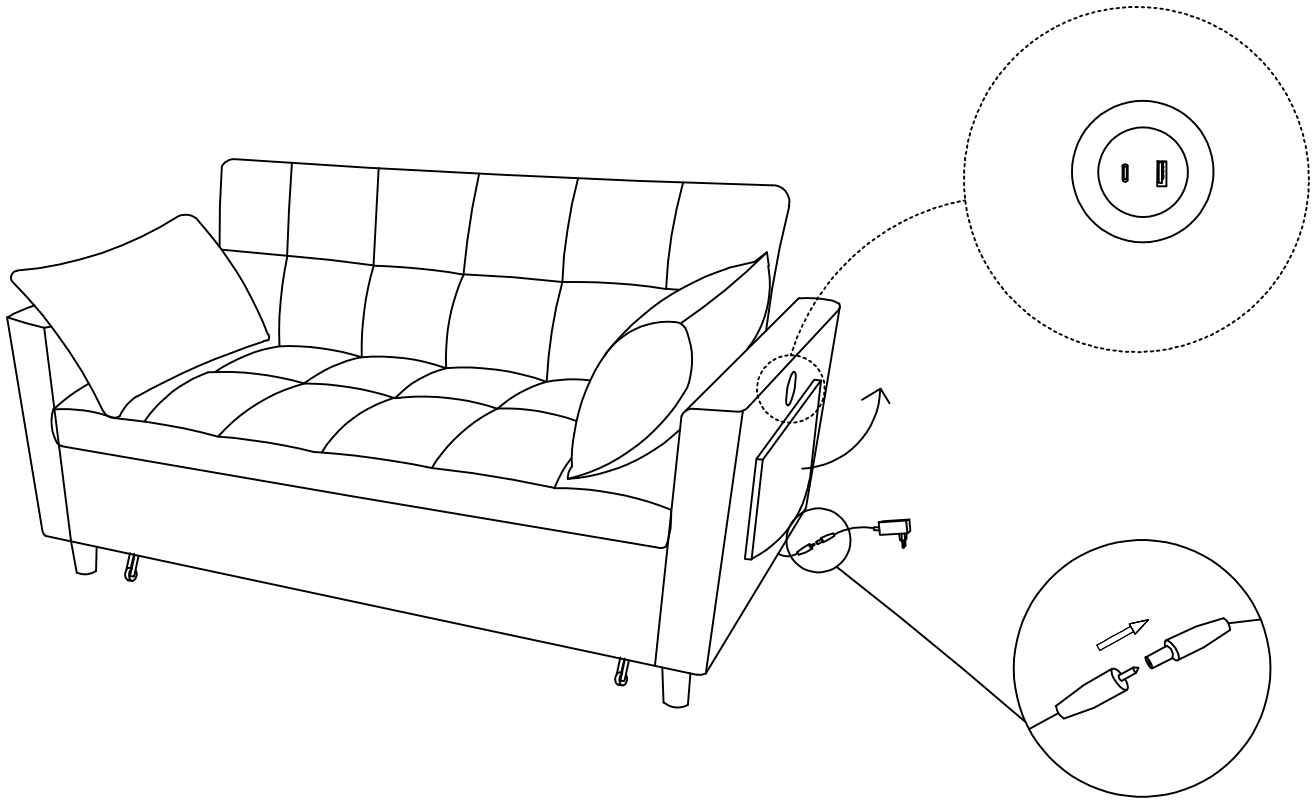

Step 6 Foldable side table top. Max.Capacity 30LBS. Press and hold the button to lift the top or lower it.

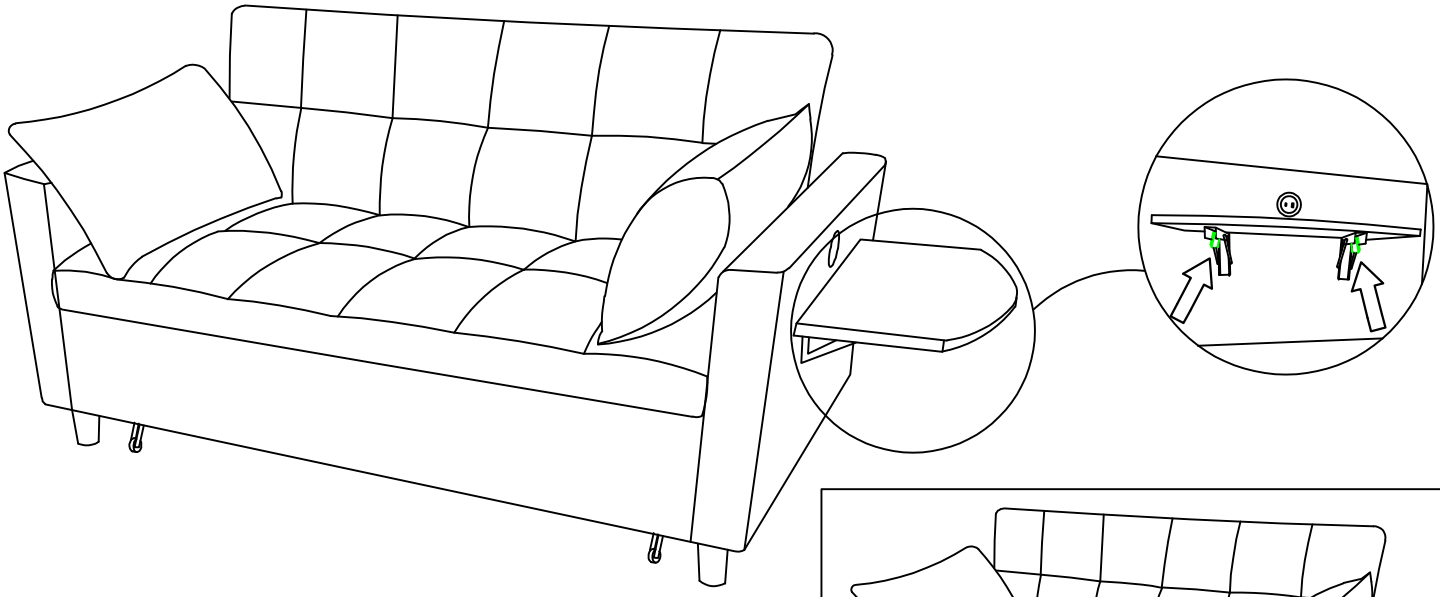

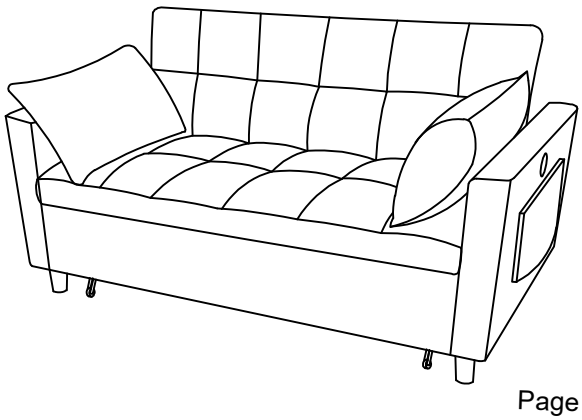

Step 7 The backrest has 3 adjustable angles.
The backrest must be adjusted more than 90°to lie flat, and convert to sofa bed.

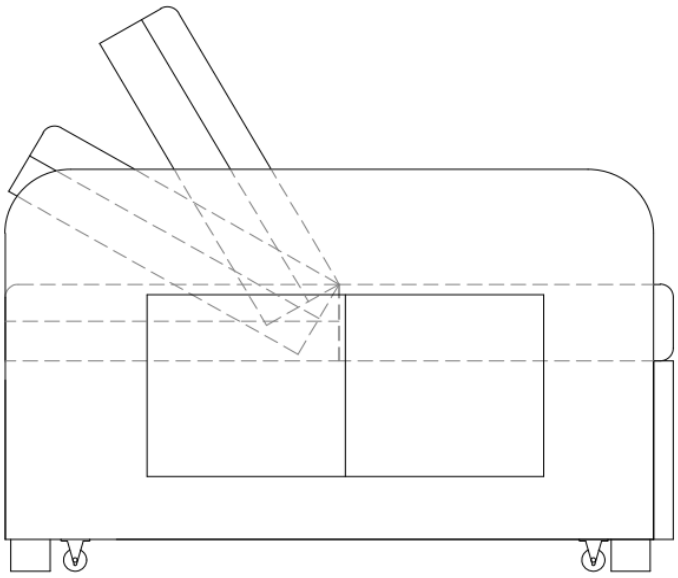

Convert the sofa to a sofa bed:
Lift up the pull-out bed frame by straps,
and then press down to make it align to the seat.

