Bed Frame

Instruction Manual

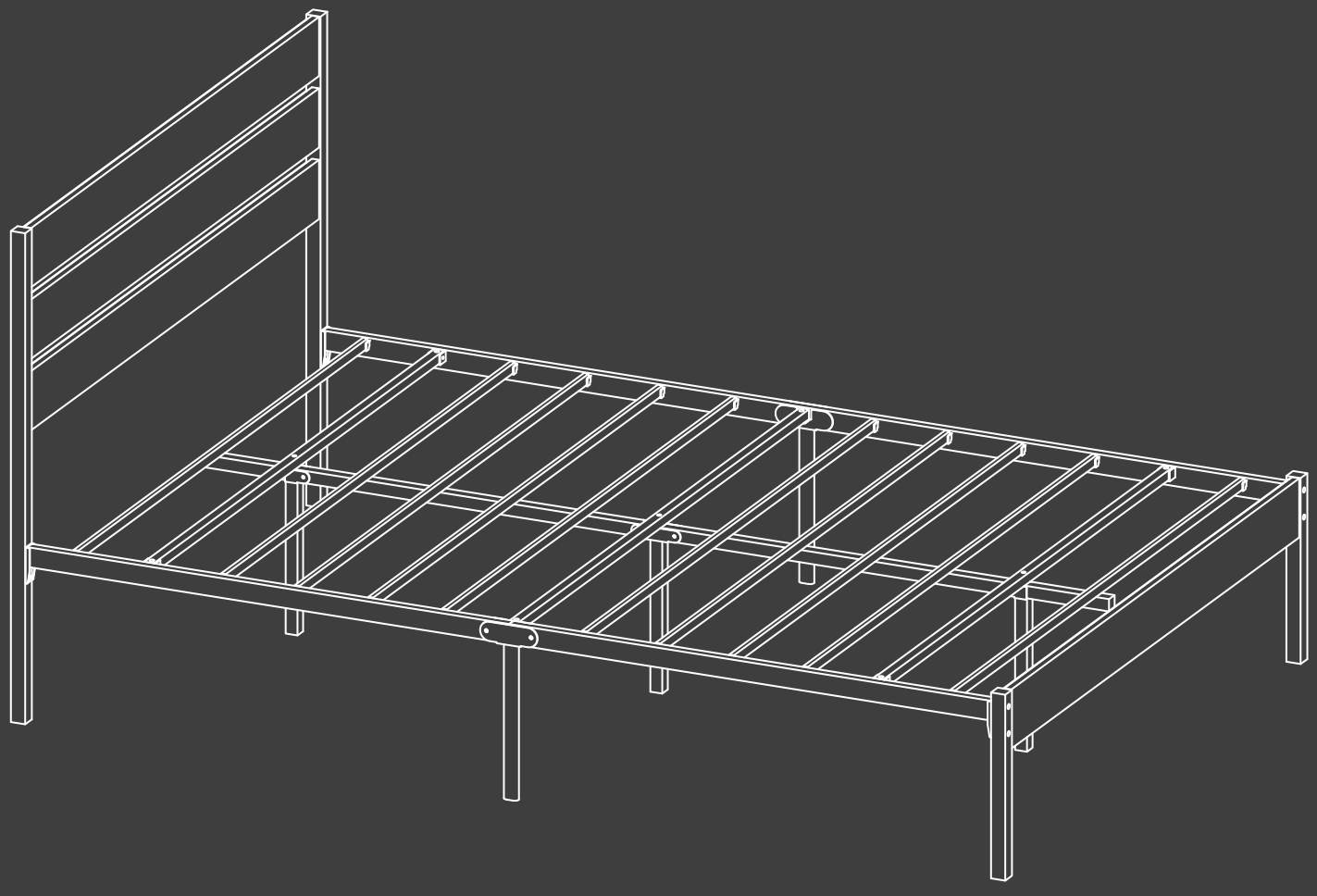

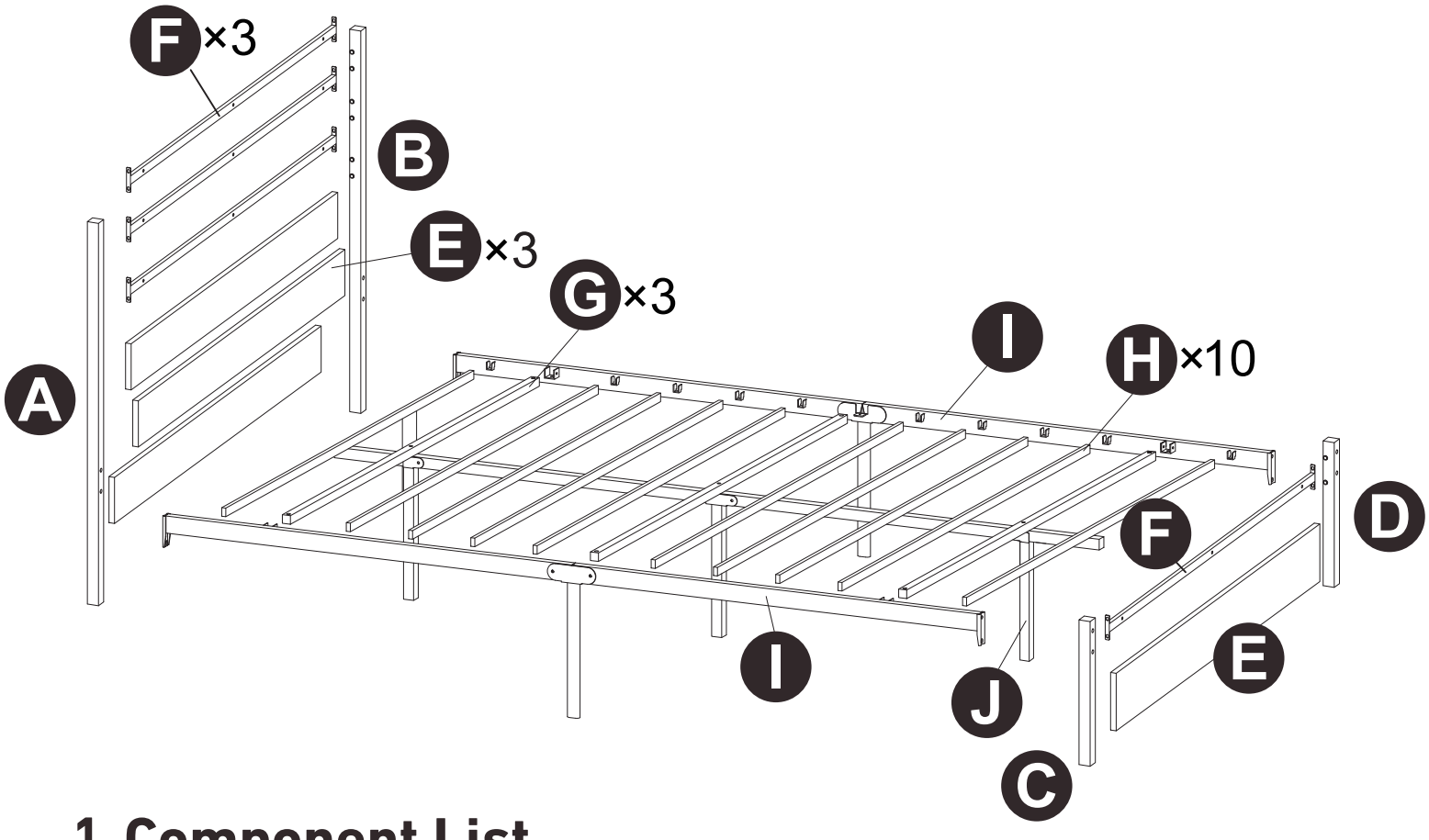

1 Component List

A

x1

Left bed leg

B

x1

Right bed leg

C

x1

Left bed tail leg

D

x1

Right bed tail leg

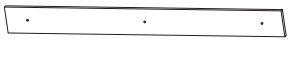

E

x4

Head and tail board

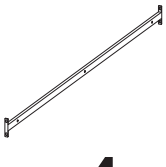

F

x4

Head and tail rail

G

x3

link bar

H

x10

Ribs strip

I

x2

Side frame

J

x1

Middle frame

2 Hardware

1

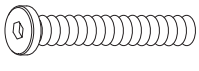

x4

M8x50mm

2

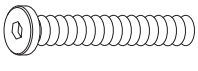

x3

M6x55mm

3

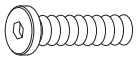

x4

M6x25mm

4

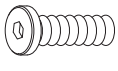

x12

M6x20mm

5

x8

6

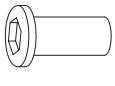

x4

7

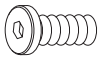

x16

M6x12mm

8

x2

9

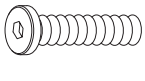

x6

M6x30mm

10

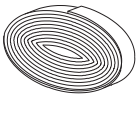

x1

Step 1

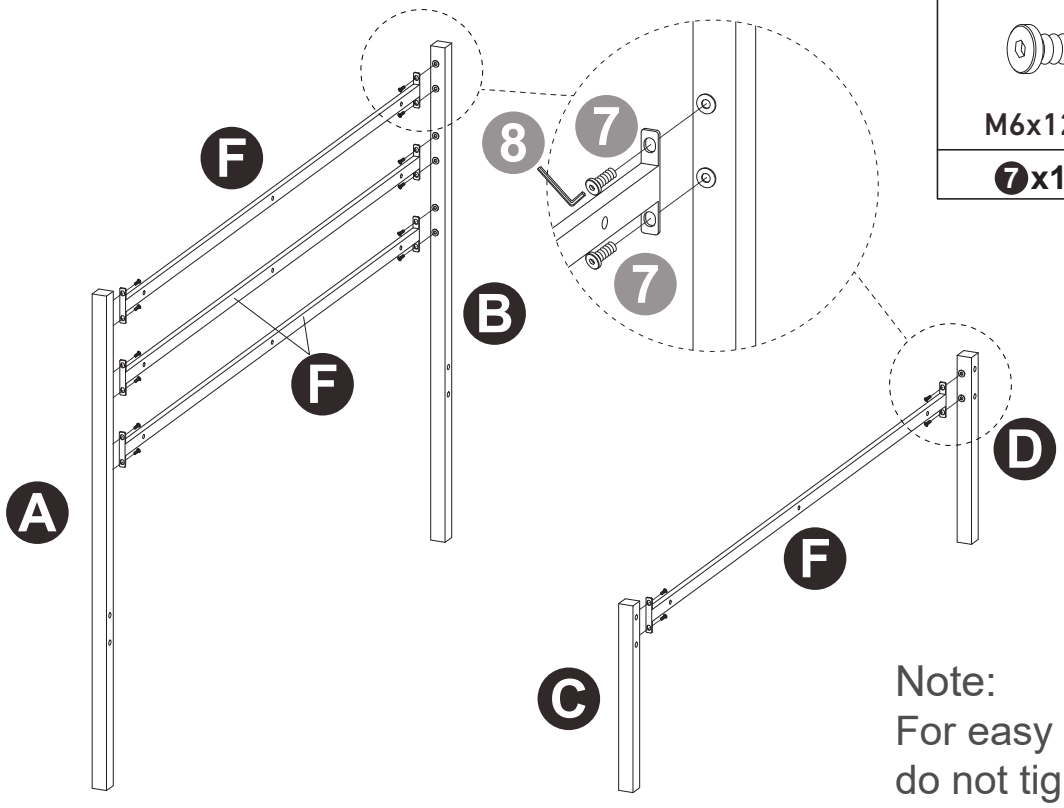

M6x12mm	
❼x16pcs	❽x1pc

Note:
For easy setup intention
do not tighten screws during
the installation process,

Step 2

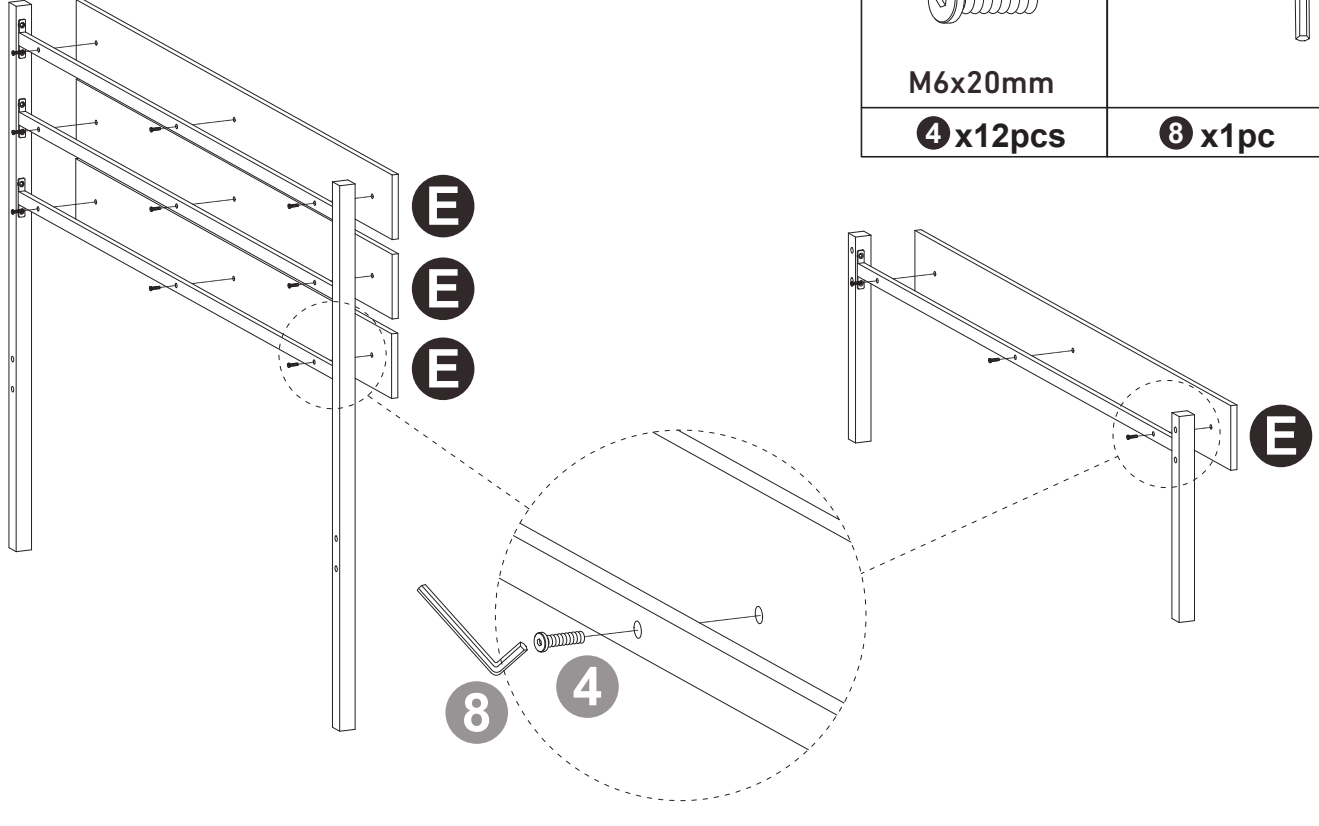

M6x20mm	
❹x12pcs	❽ x1pc

Step 3

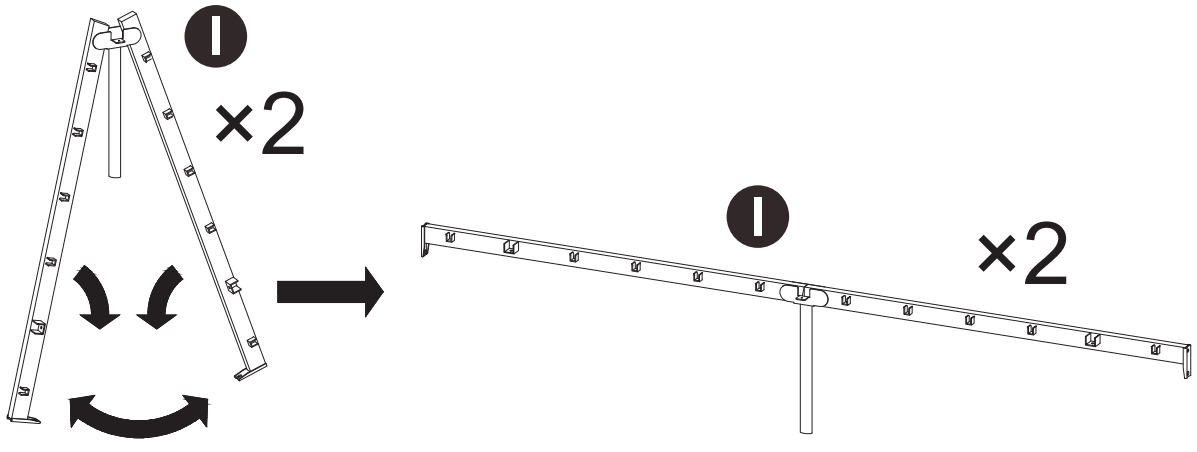

Step 4

M8x50mm	M6x25mm			
❶x4pcs	❸x4pcs	❺x8pcs	❻x4pcs	❽x2pcs

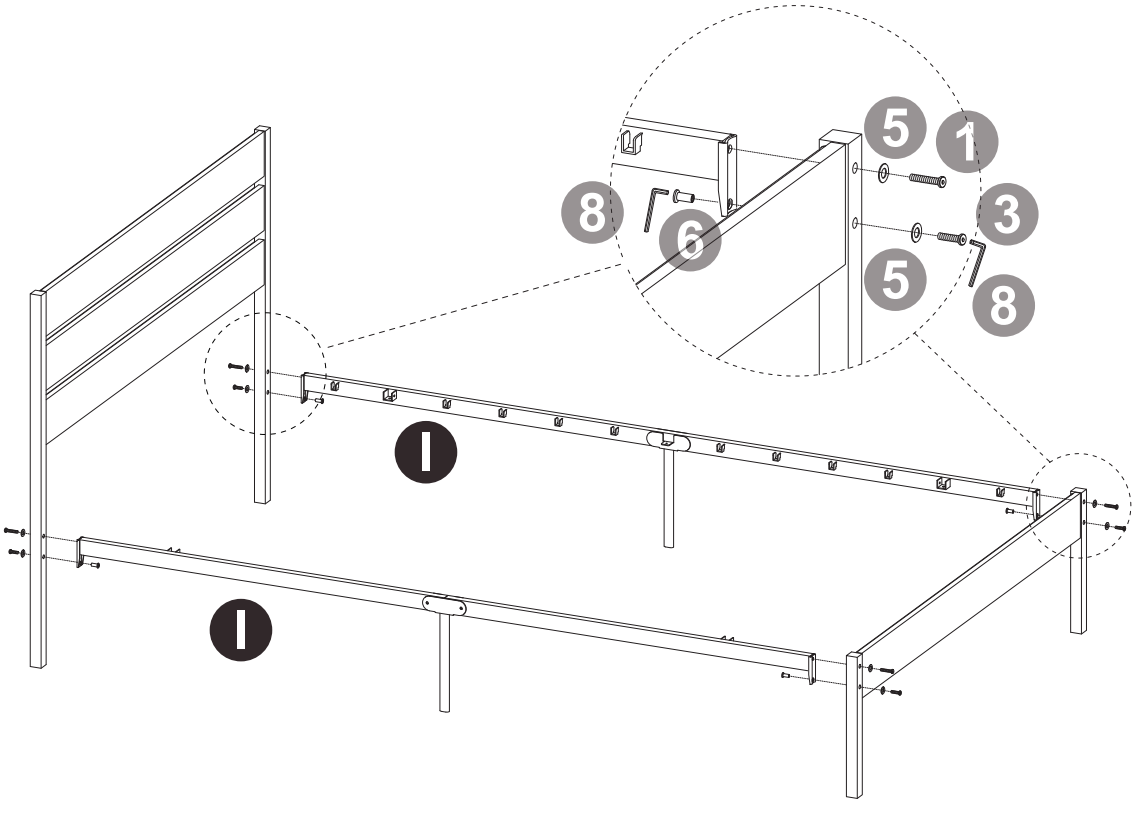

Step 5

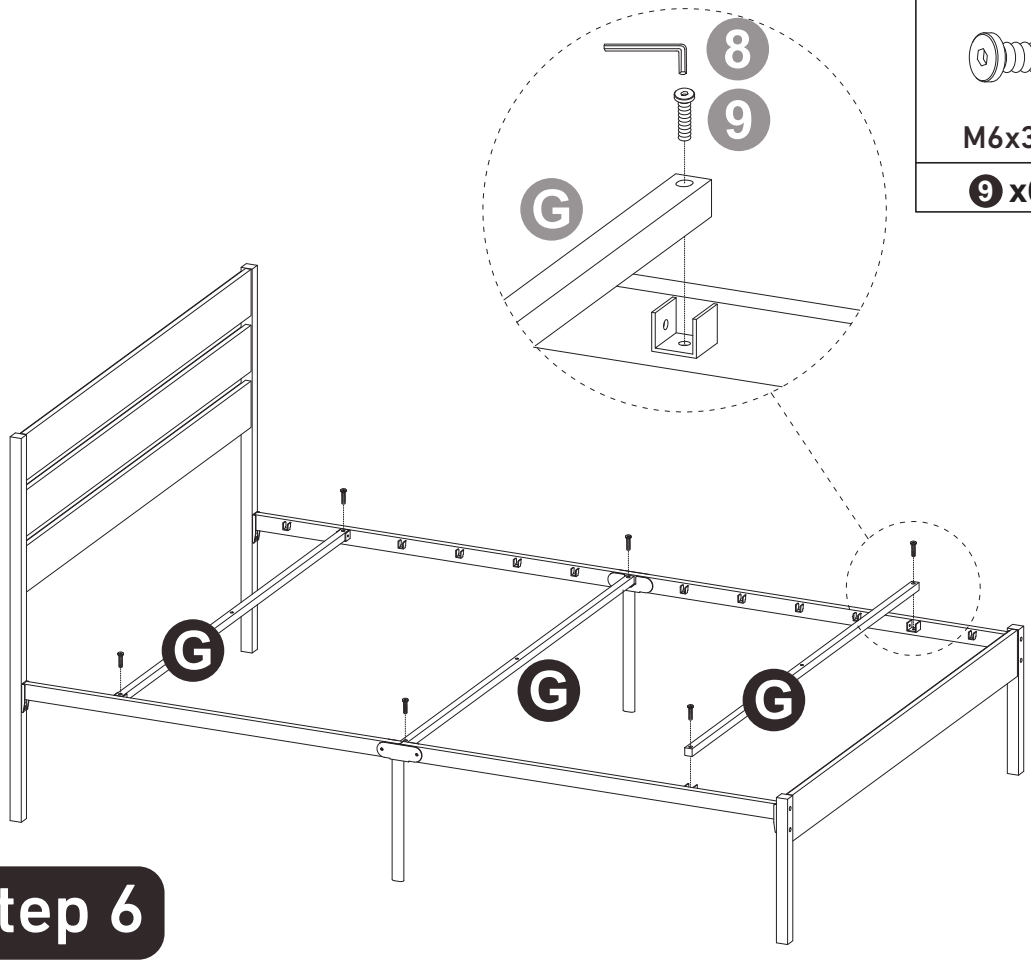

M6x30mm	
❾ x6pcs	❽ x1pc

Step 6

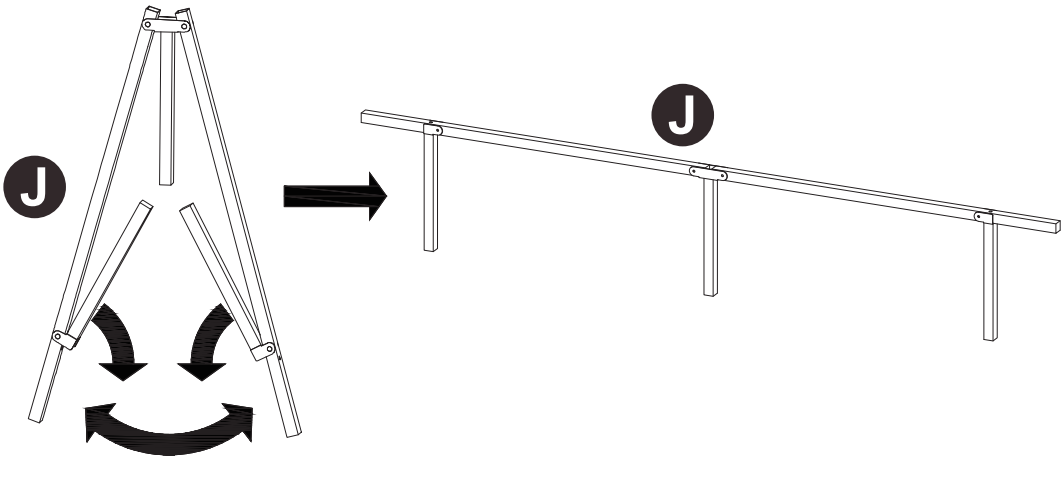

Step 7

M6x55mm		
❷ x16pcs	❿x1pc	❽ x1pc

step2.To prevent friction noise, unroll part ❿ and fit it on part J ,the lenght of part N can cut as you will.

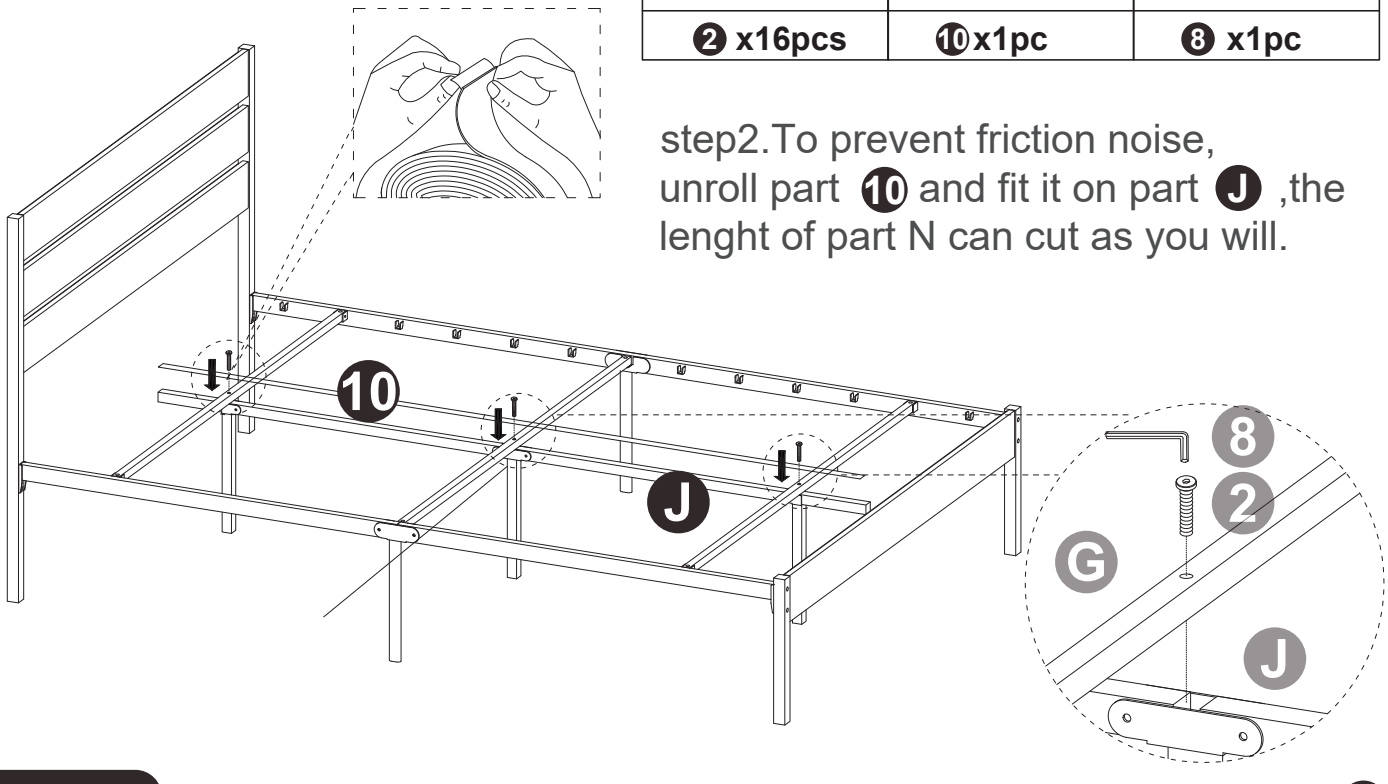

step1.Tighten screw ❷

Step 8

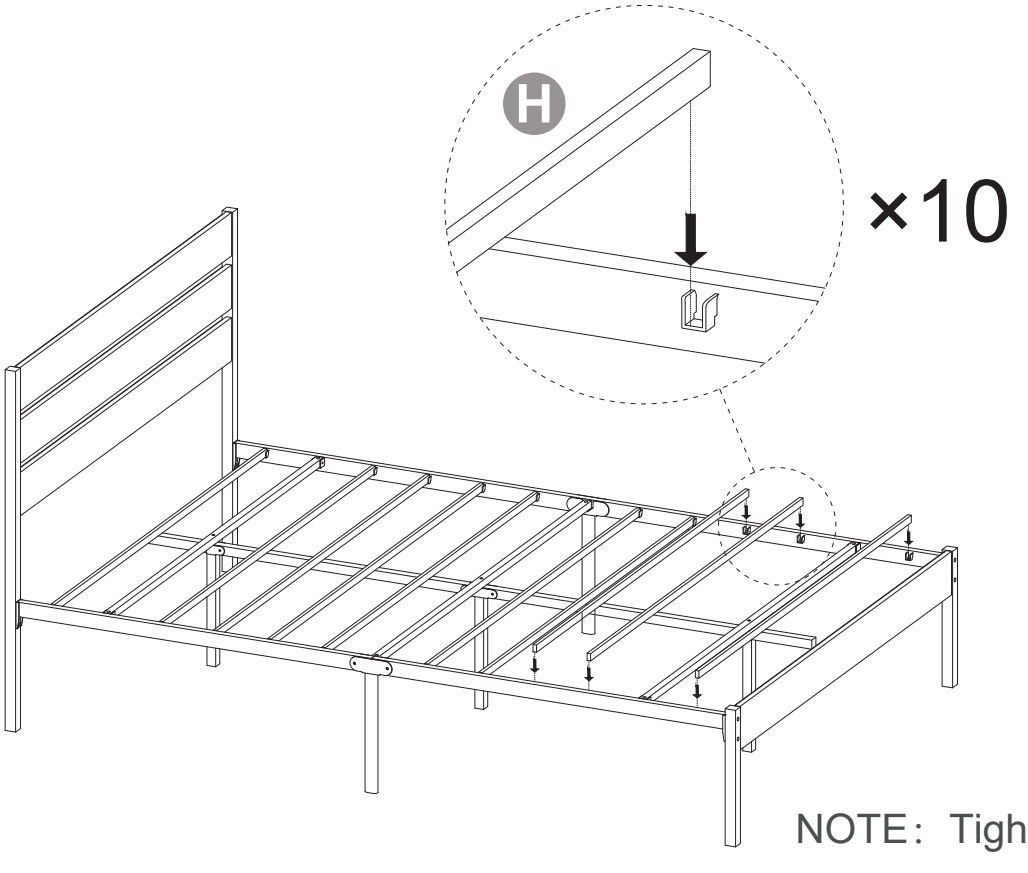
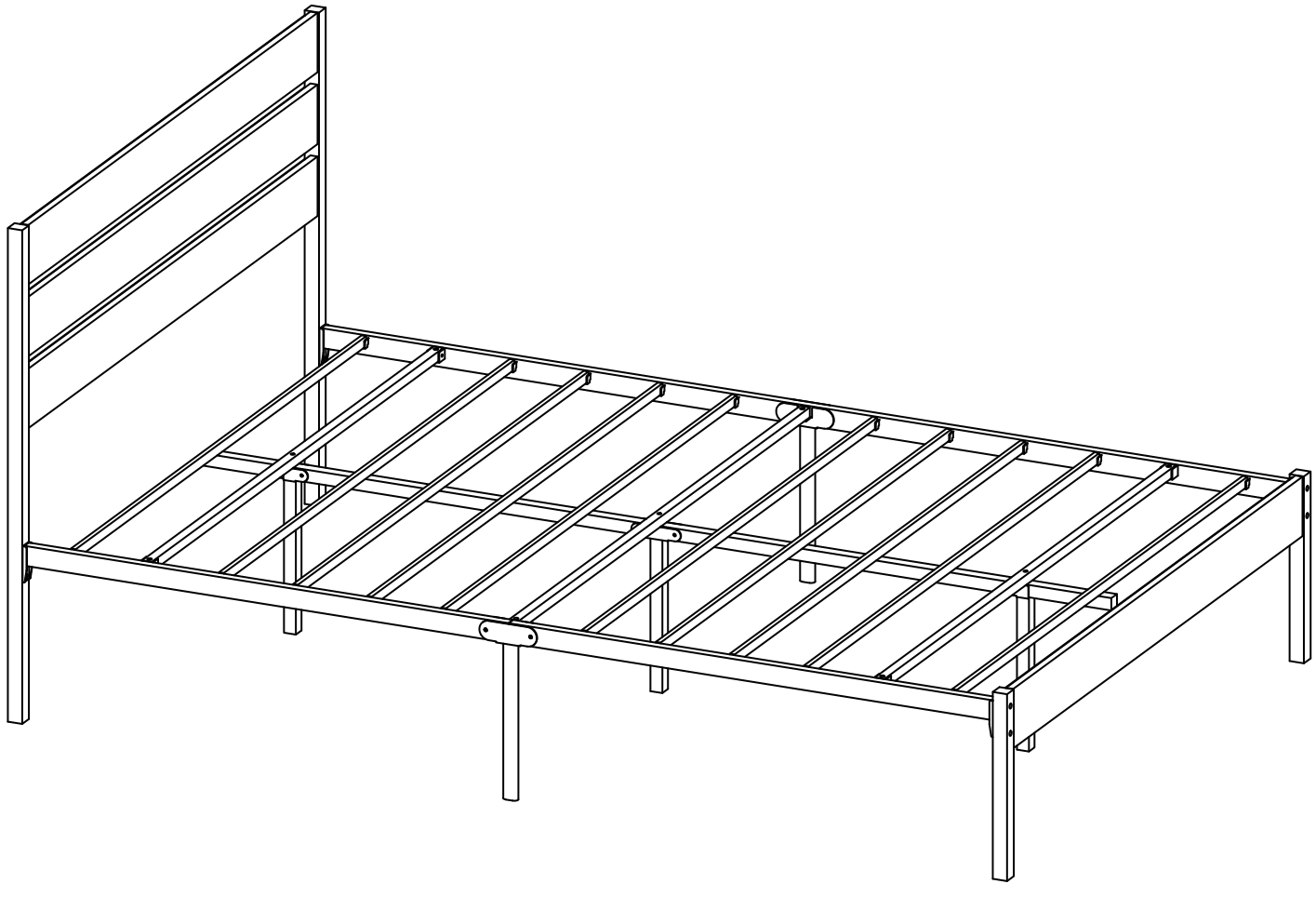
NOTE：Tighten all screws .