MOVABLE DINING CART TABLE

PIZZA OVEN CART

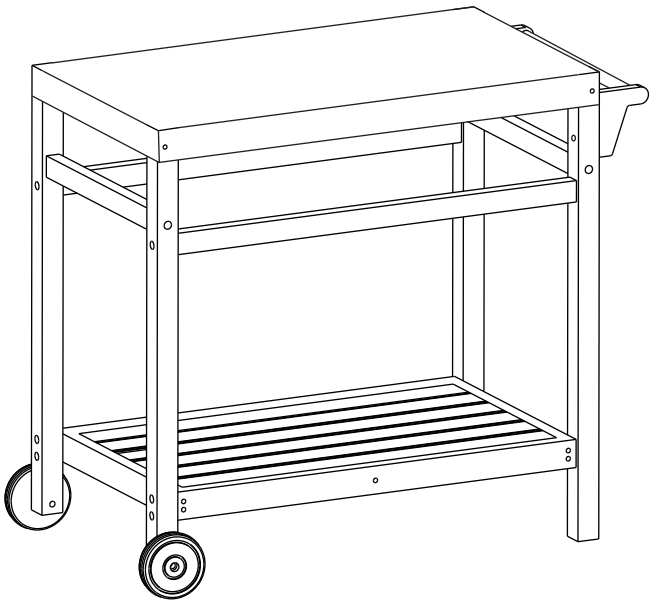

Assembly Consideration

Do not overtighten screws(Screw in all screws before tighten them)
Follow Assembly Instructions Step by Step
Do not discard original packaging if your received items damaged or with missing parts
Count all Hardware parts before starting assembly
Assemble items in a clear area and away from clutter to avoid misplacing assembly items

Safety Precautions

Avoid Using strong powertools to help prevent wood from cracking when assembly

Customer Service

hello.hdpe@gmail.com

SCREWS

①	M6.3X70		16pcs
②	M6.3X30		4pcs
③	M6.3X50		4pcs
④	M8X70	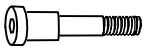	2pcs
⑤	M8		2pcs

TOOLS

⑥	5#	
⑦		
⑧	5#	

PARTS

A 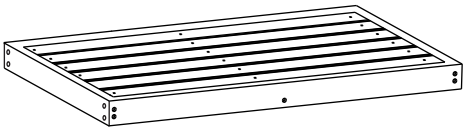

B 

C 

D 

E 

F 

G 

H 

L 

R 

J 

K 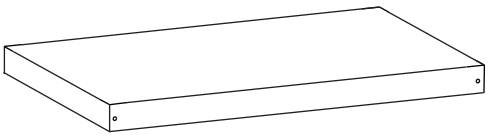

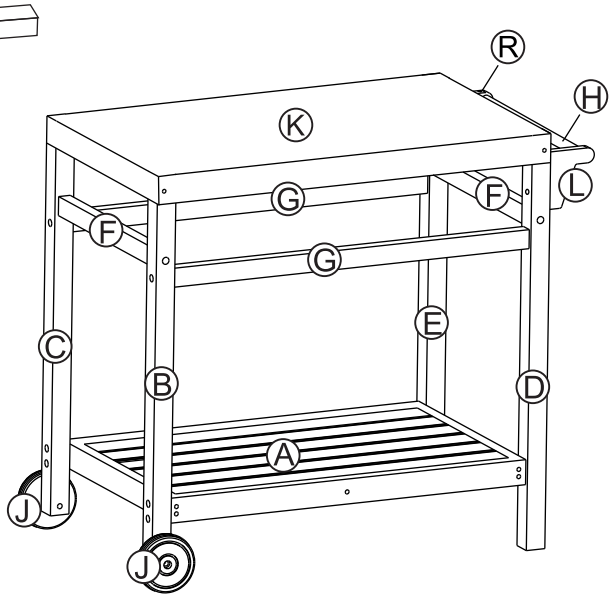

1

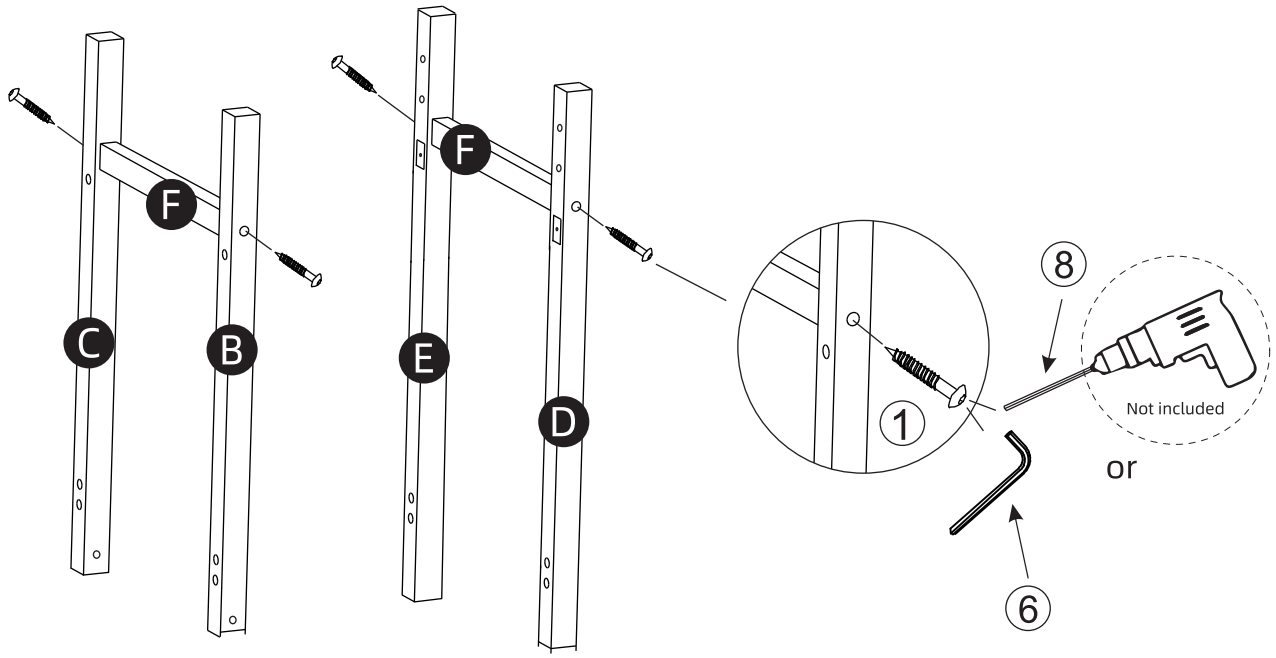

2

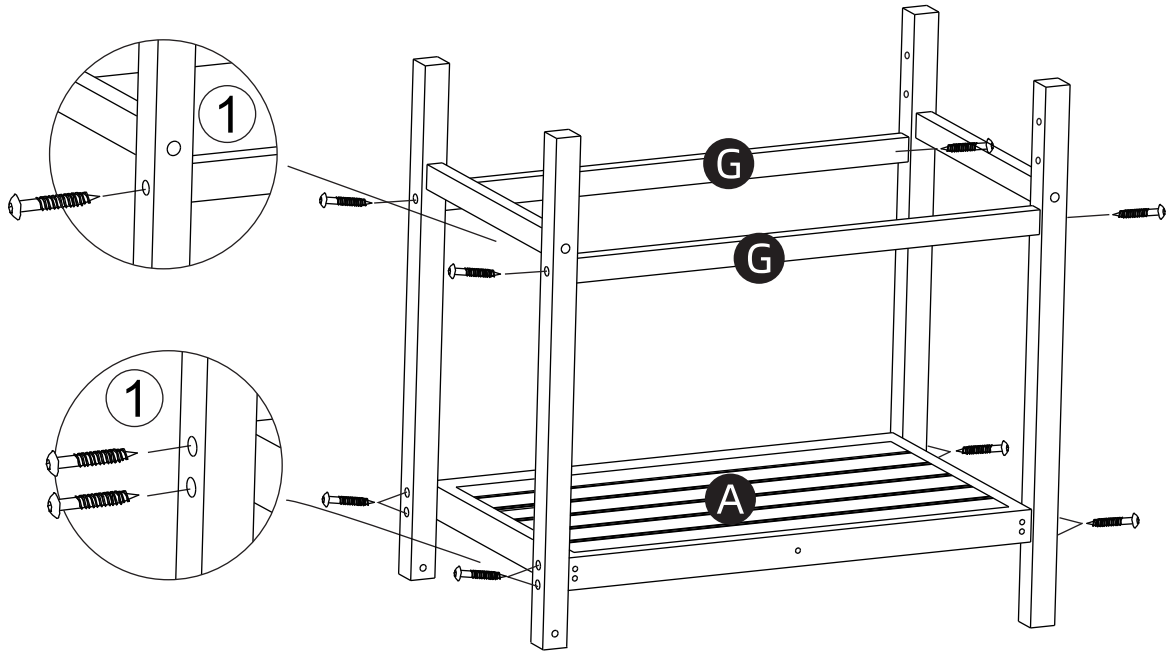

3

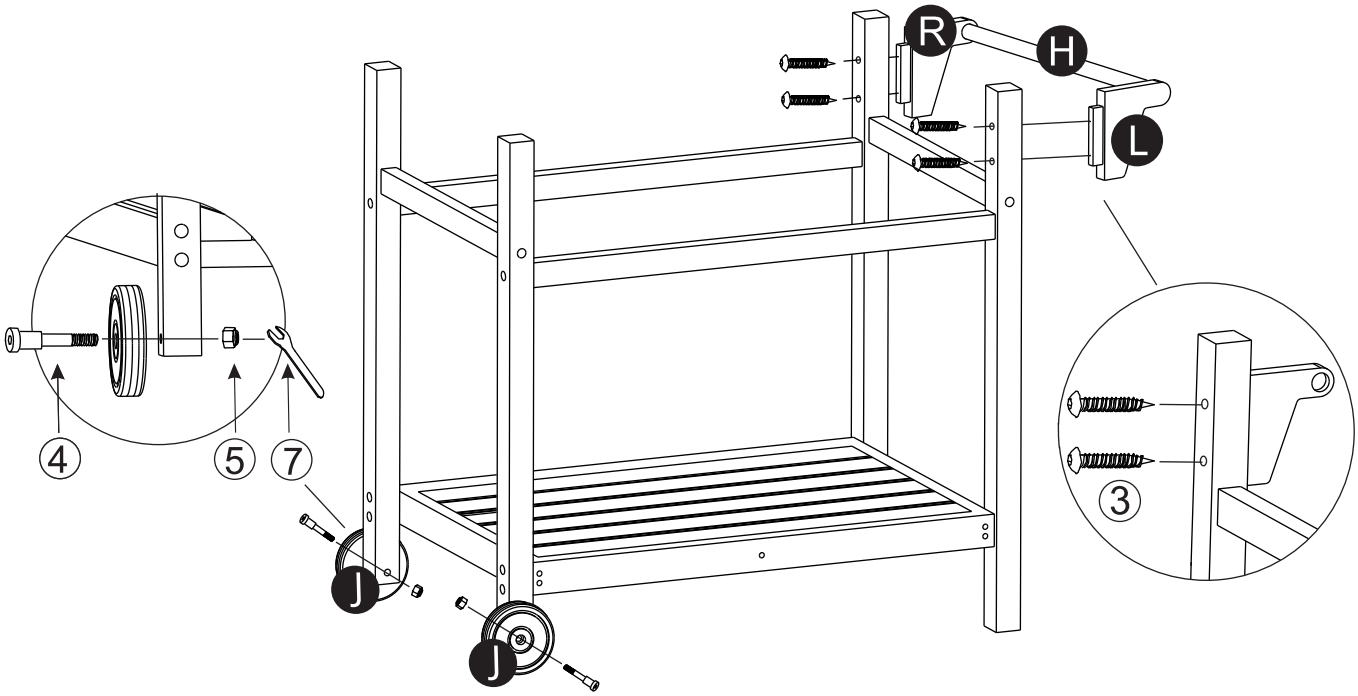

4

