Assembly Instructions

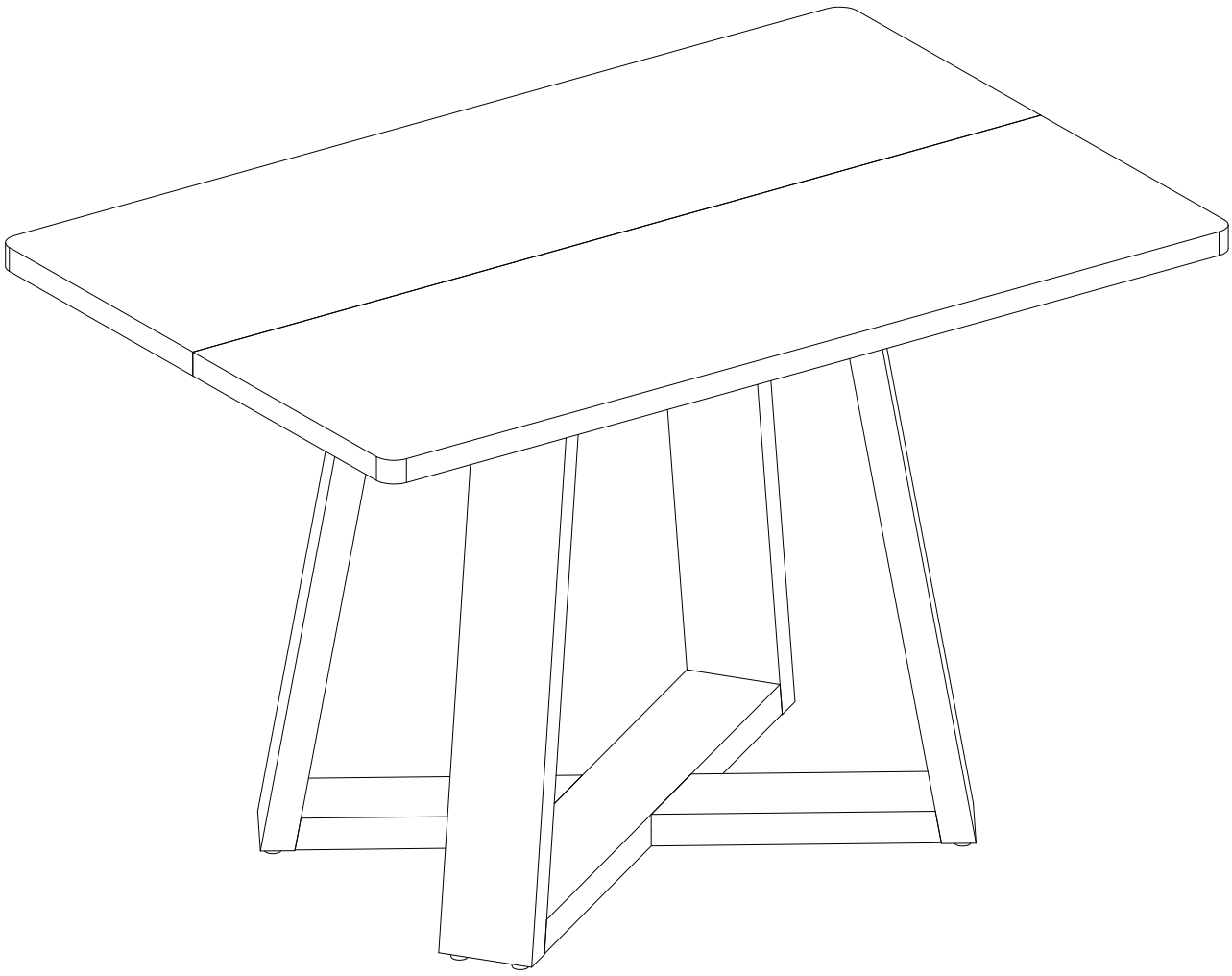

Dining Table | Model No. **HOGA-JW1240**

Contact Us

We're here to help you.

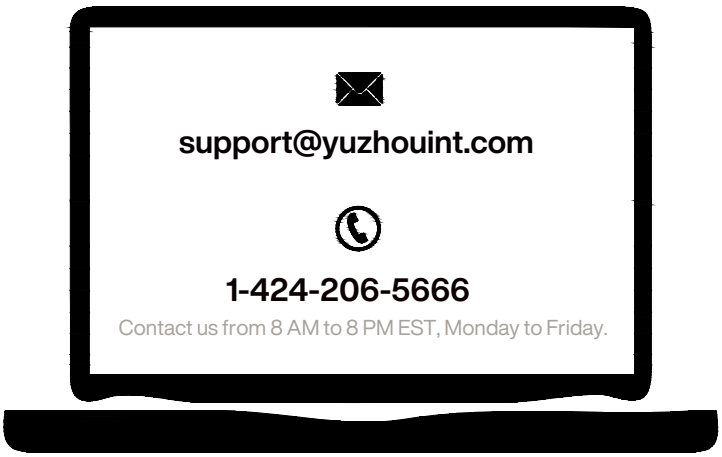

Your satisfaction is our top priority. If you encounter any issues with this product, such as missing or damaged parts, we're here to help. Please retain the original packaging and take photos of the packaging and the product, then contact us as soon as possible.

Warm Tips

1. Carefully read these instructions and keep them for future reference.
2. Check the parts list and confirm everything's there before starting assembly.
3. When assembling, put all parts on a soft, smooth surface like a carpet to avoid scratches.
4. Don't fully tighten screws until all parts are confirmed in place to avoid misalignment.

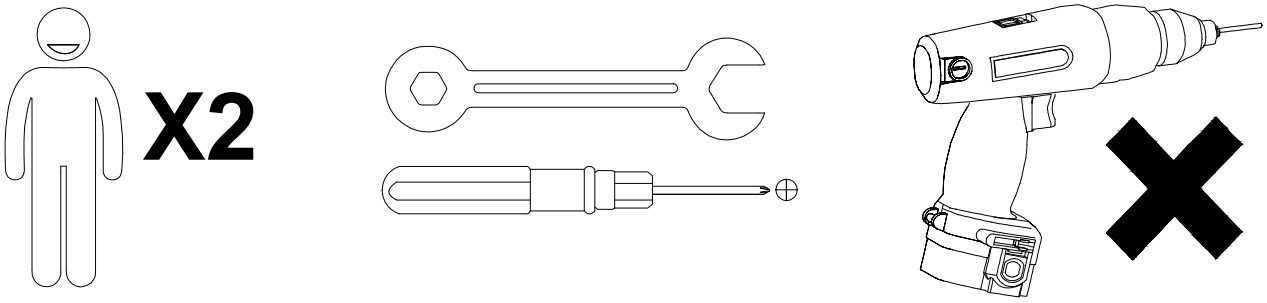

We recommend using hand tools for assembly.
If an electric screwdriver is used, reduce power and torque to avoid damage to the product.

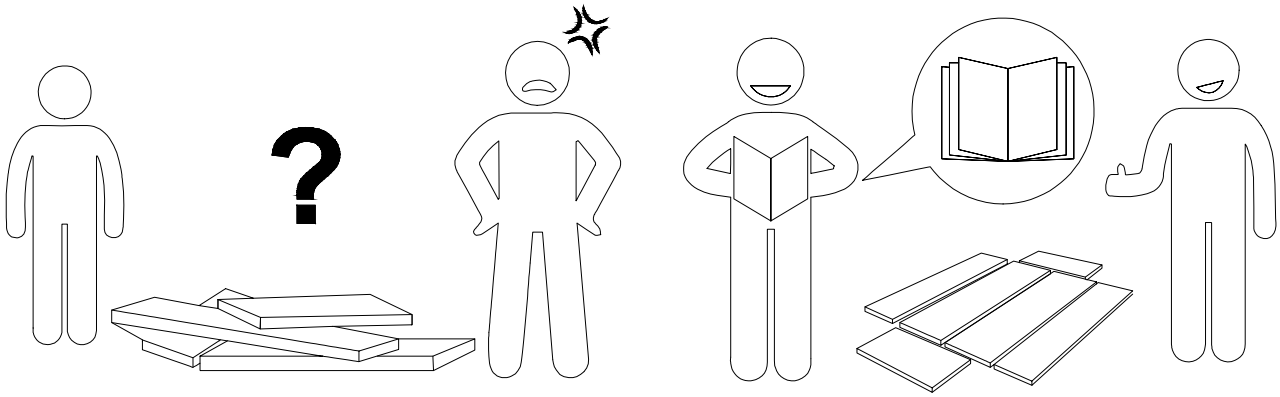

AVOID SCRATCHES

In order to avoid scratching, this furniture should be assembled on a soft surface, such as a rug.

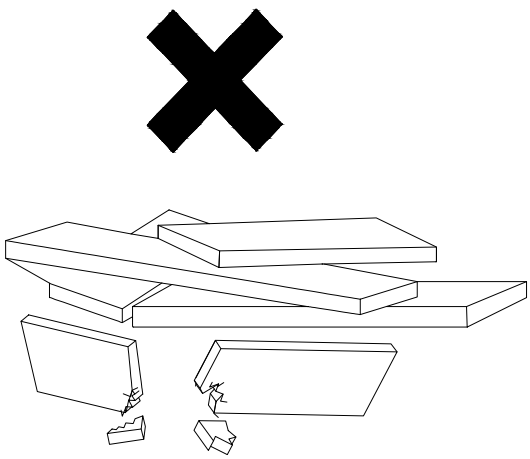

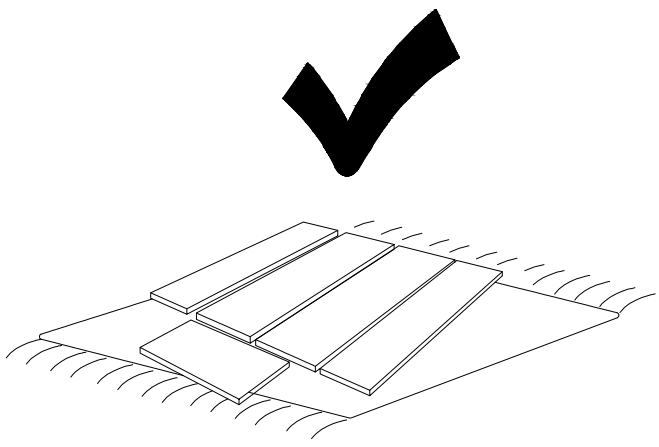

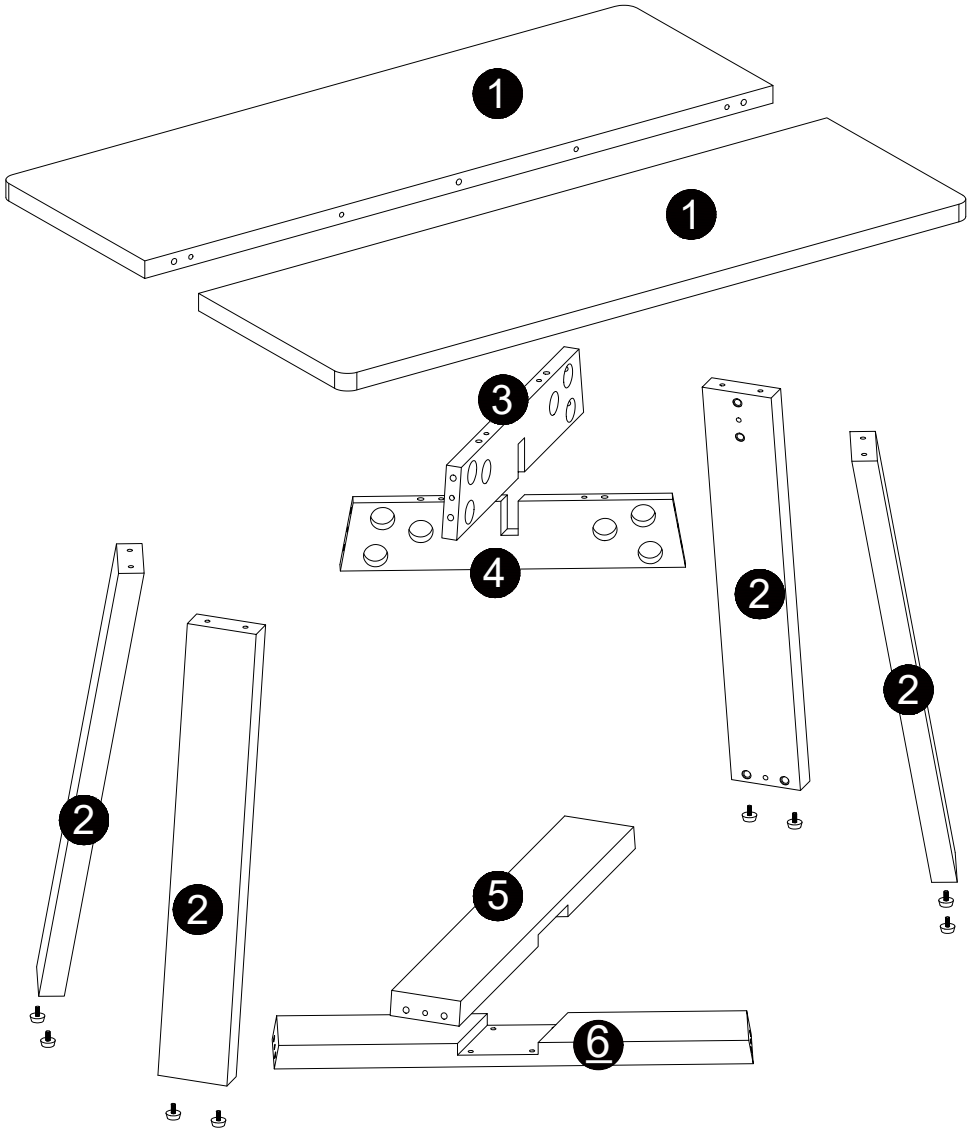

⚠ Caution

Make sure all parts are included. Most board parts are labeled or stamped on the raw edge.
Contact us for a free replacement if you encounter any damaged or missing parts.

Parts List

1 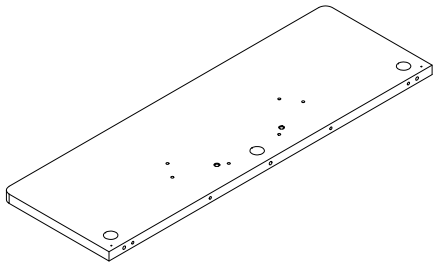 2 pcs	2 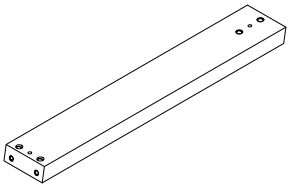 4 pcs	3 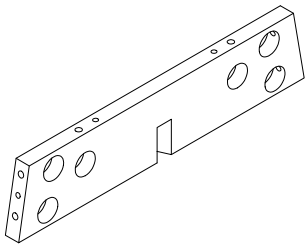 1 pc
4 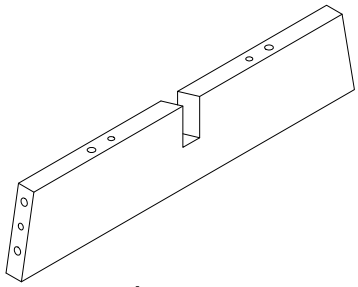 1 pc	5 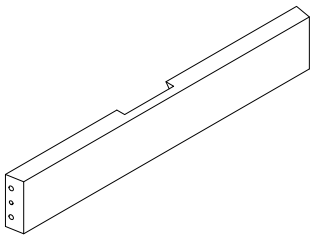 1 pc	6 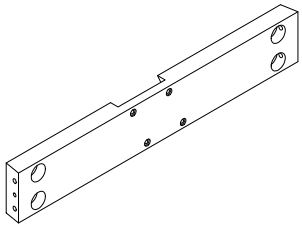 1 pc

Hardware List

A	B	C	D	E	F	G
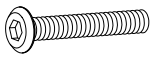 M6x30mm	 Φ8x30mm	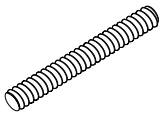 M8x100mm	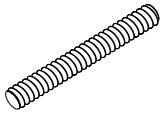 M8x70mm	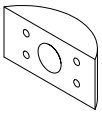 Φ8x30mm	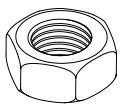 M8x14mm	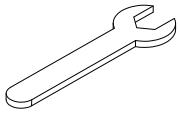 M8
4 pcs	24 pcs	3 pcs	20 pcs	26 pcs	26 pcs	2 pcs

H	I	J	K	L	M	
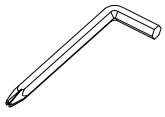 M4	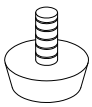 M6	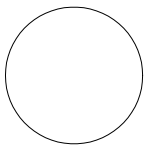 Φ45mm	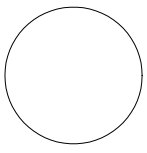 Φ45mm	 Φ3.5x14mm	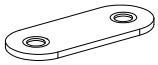 47x16mm	
1 pc	8 pcs	6 pcs	12 pcs	4 pcs	2 pcs	

1

B	D
	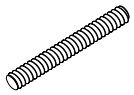
M8x30mm	M8x70mm
20 pcs	20 pcs

2

G	B	C	F	E
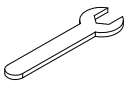		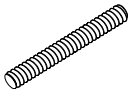		
M8	M8x30mm	M8x100mm	M8x14mm	Φ8x30mm
2 pcs	4 pcs	3 pcs	6 pcs	6 pcs

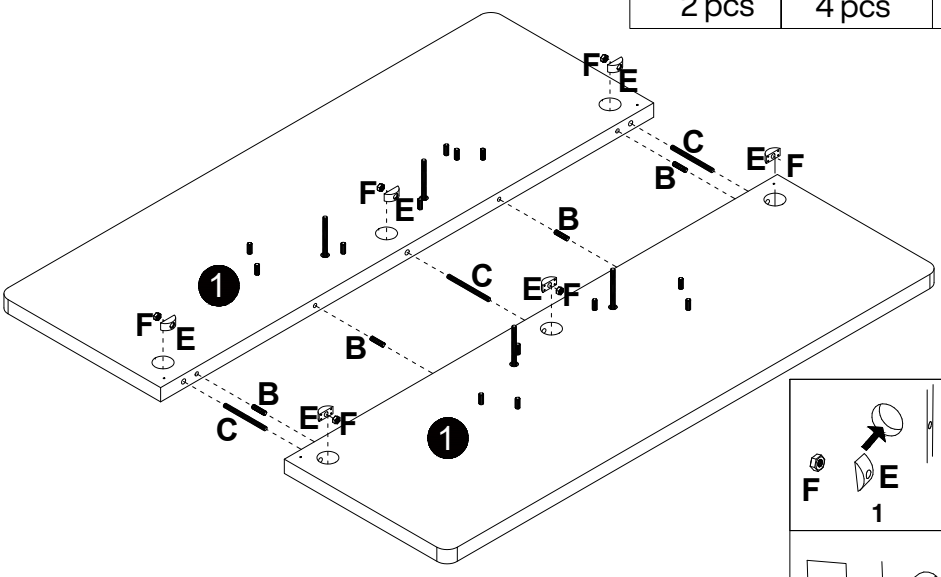

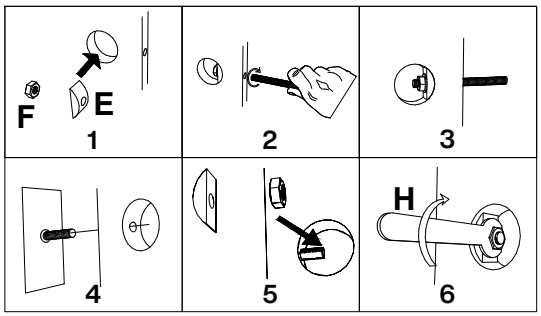

H	A
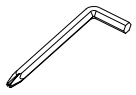 M4	 M6x30mm
1pc	4 pcs

3

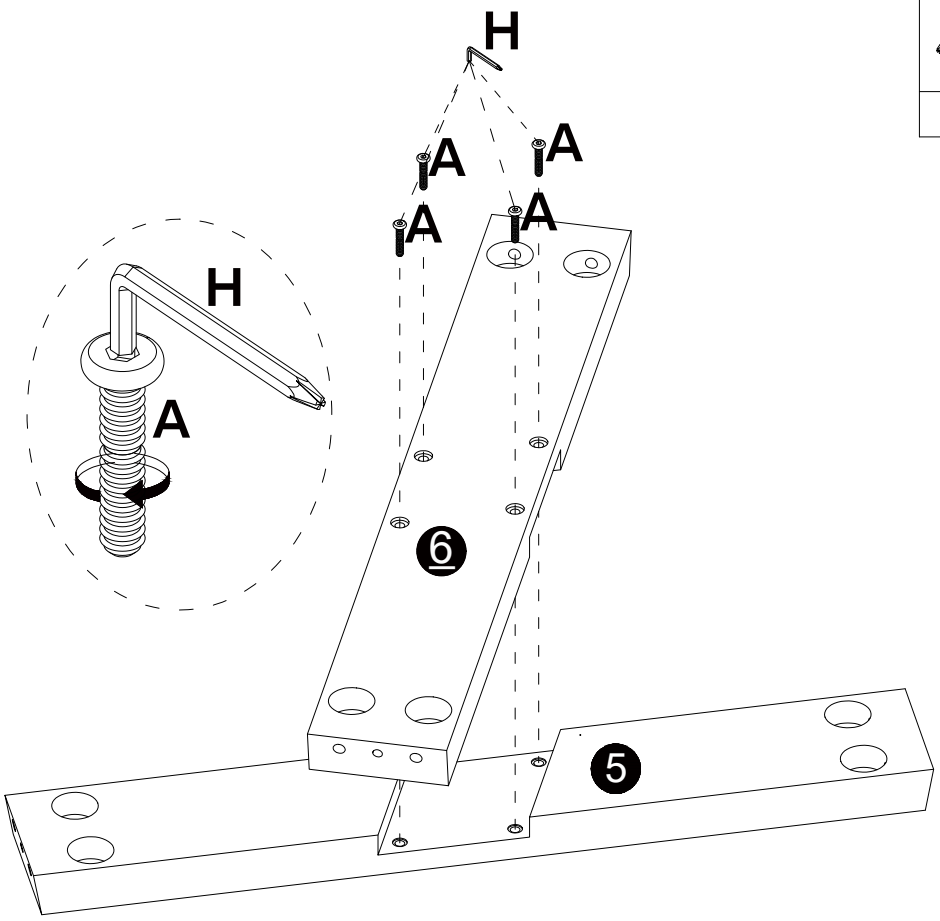

4

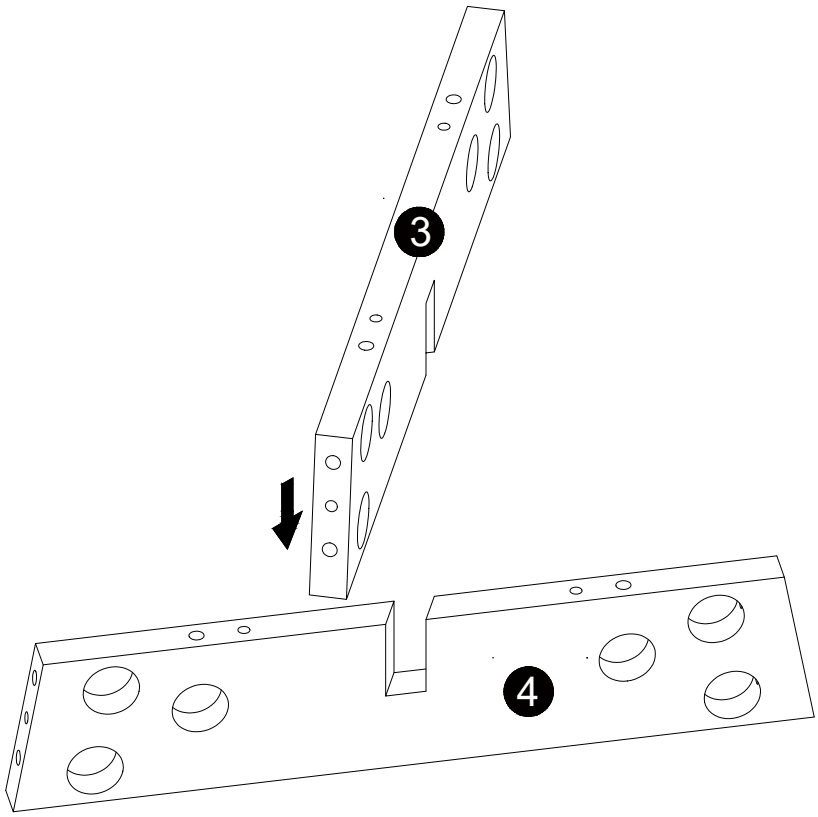

5

F	E
	
M8x14mm	Φ8x30mm
8 pcs	8 pcs

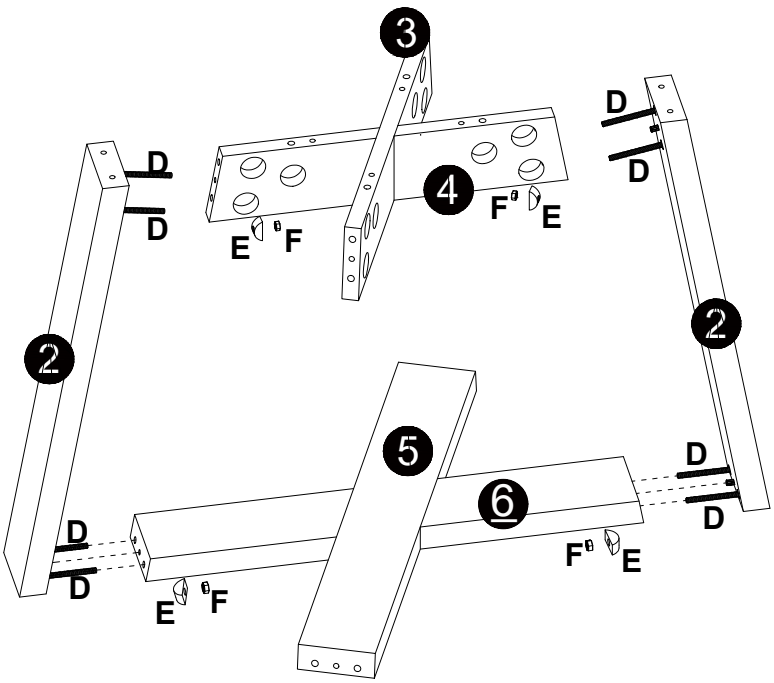

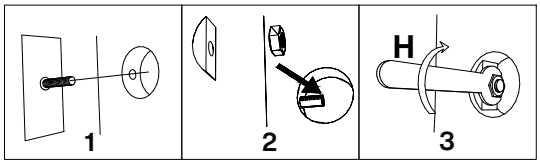

6

F	E
	
M8x14mm	Φ8x30mm
8 pcs	8 pcs

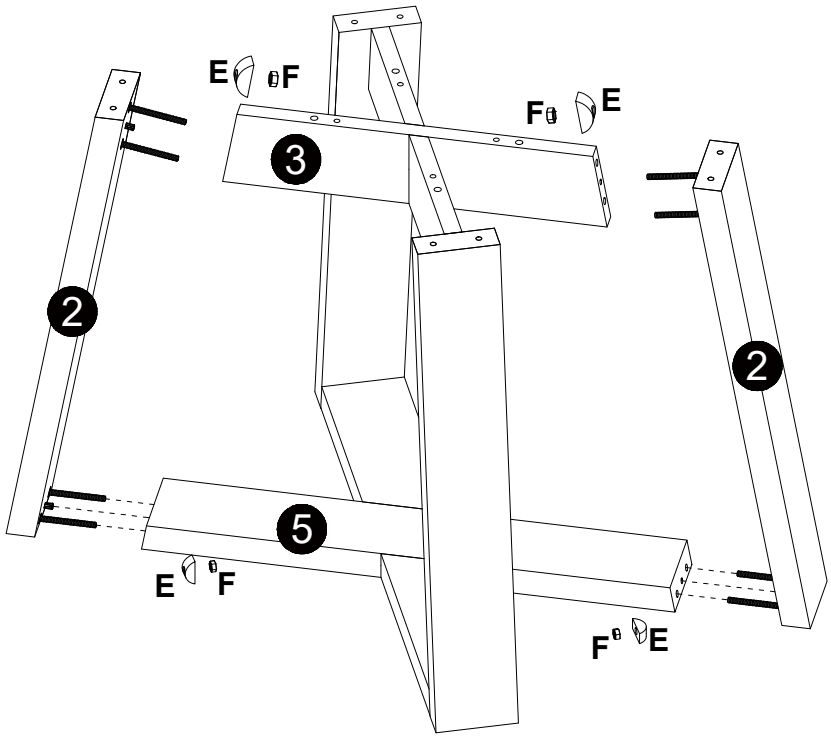

7

I	F	E
M6	M8x14mm	Φ8x30mm
8 pcs	4 pcs	4 pcs

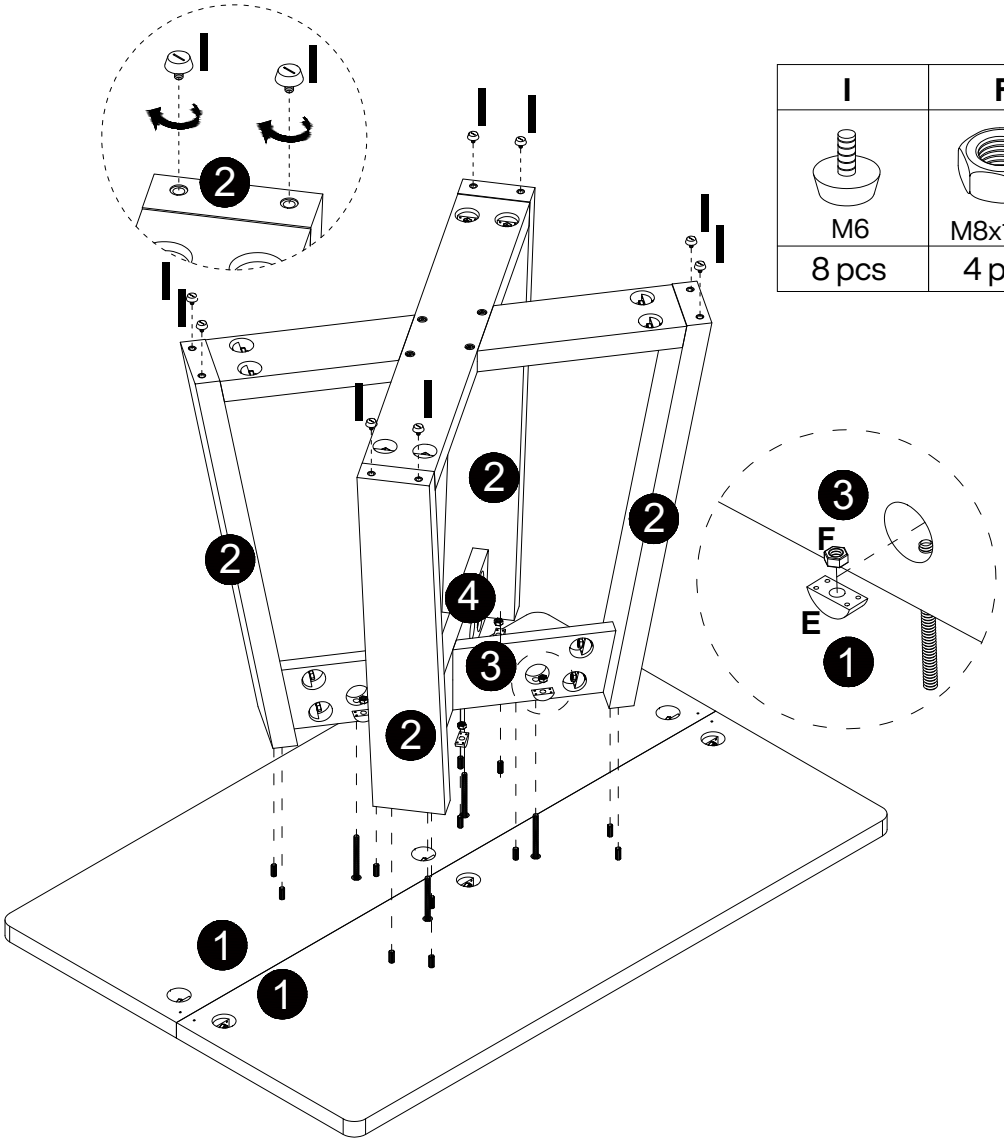

8

K	J	M	L
Φ45mm	Φ45mm	47x16mm	Φ3.5x14mm
12 pcs	6 pcs	2 pcs	4 pcs

Pay attention to the color between J and K

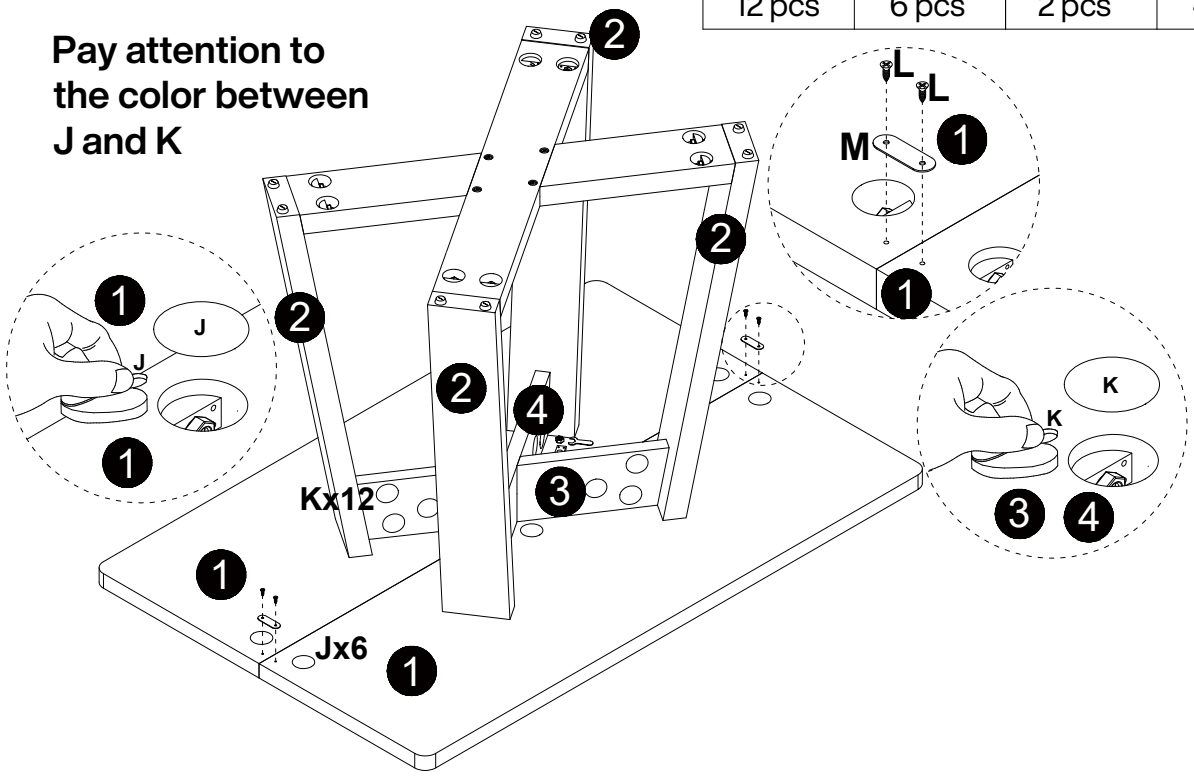

Thank you for your support!

