ASSEMBLY INSTRUCTION

WALL EASY REACH CABINET

Estimated Assembly Time: 50 - 60 minutes
2-person assembly recommended
Two boxes will be received when ordering LSB33 and LSB36

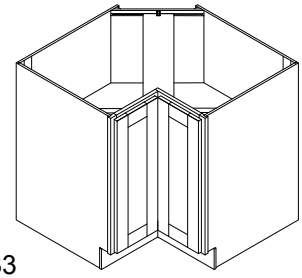

TOOLS REQUIRED

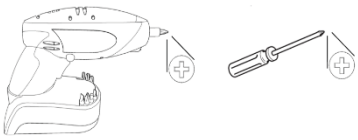

PART	DESCRIPTION	QTY	PART	DESCRIPTION	QTY
B	Box bottom panel	1	R2	Box side panel - right	1
C	Box back panel	1	S1	Box side panel - left	1
D	Face frame	1	S2	Box side panel - right	1
E1	Toe kick panel - left	1	W	Reinforced wood panel	1
E2	Toe kick panel - right	1	Z1	Door panel with four hinge holes	1
K	Adjustable shelf	1	Z2	Door panel without hinge hole	1
R1	Box side panel - left	1			

HARDWARE CONTENTS

BB Counter corner block x 4

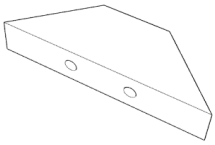

DD Rubber bumper x 4

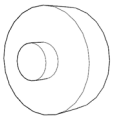

EE Adjustable shelf clip x 6

FF 1″ Flat head phillips screw x 14

KK 135 Degree hinge x 2

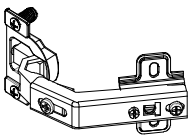

LL 165 Degree hinge x 2

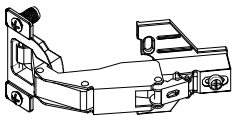

MM Wooden dowel pin x 6

QQ 1/2″ Flat head phillips screw x 12

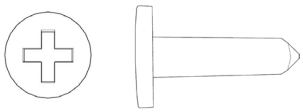

RR 3/4″ Round head phillips screw x 4

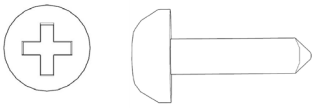

SS 1/2″ Round head phillips screw x 12

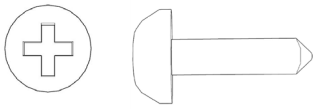

ZZ Corner brace x 3

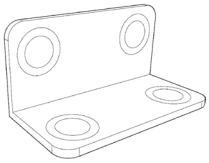

ASSEMBLY INSTRUCTION

1

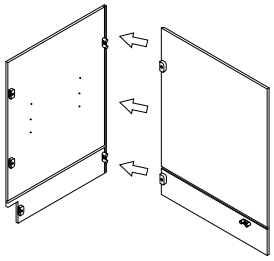

2

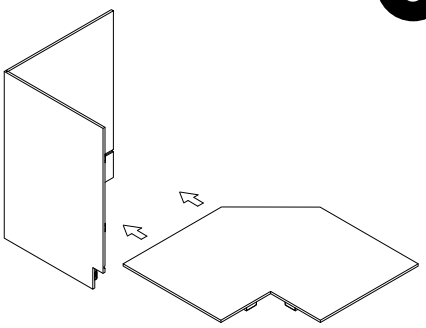

3

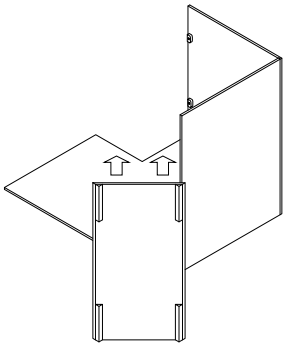

4

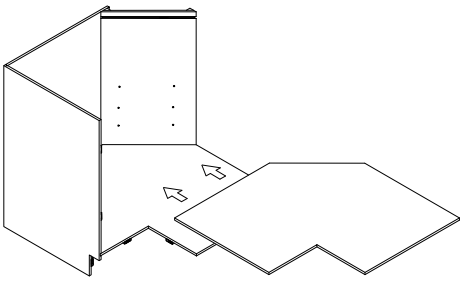

5

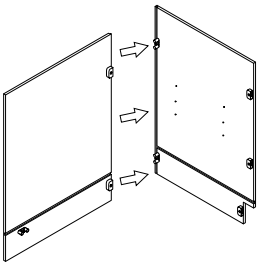

6

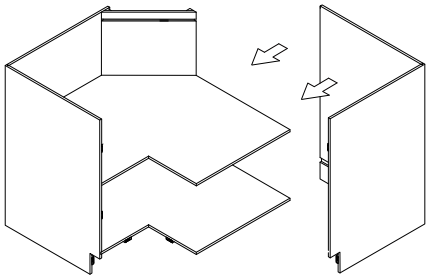

7

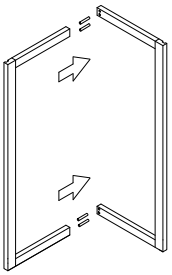

8

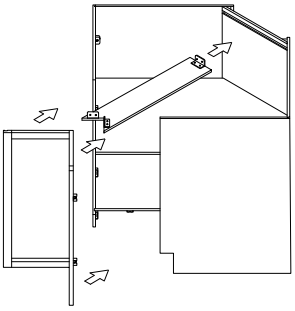

9

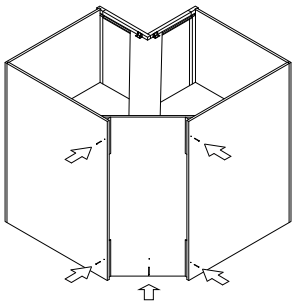

10

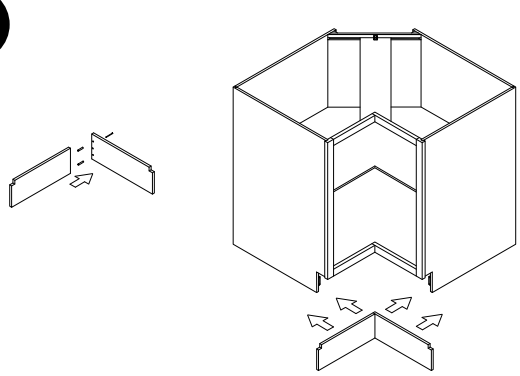

11

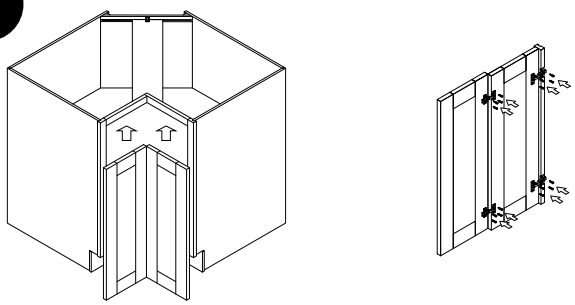

12

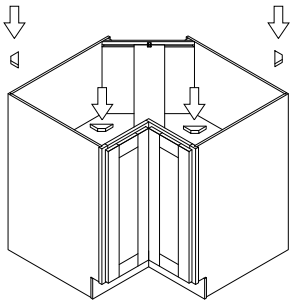

13

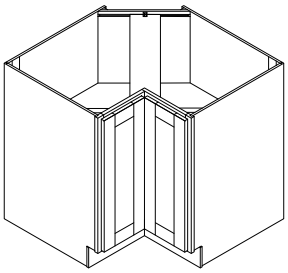

CAMLOCK CONNECTION

1. Insert the camlock to the locker.

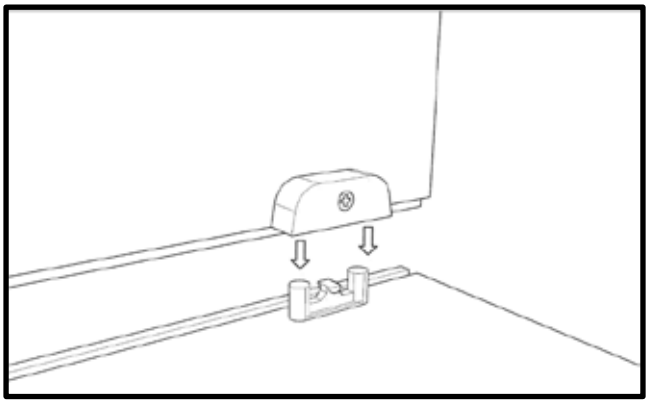

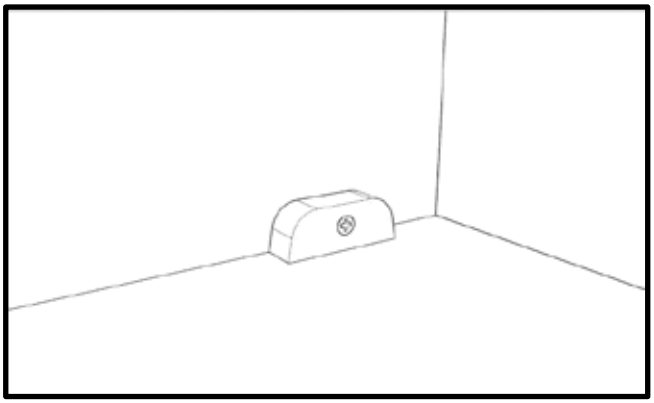

2. Turn the nut clockwise to latch two parts.

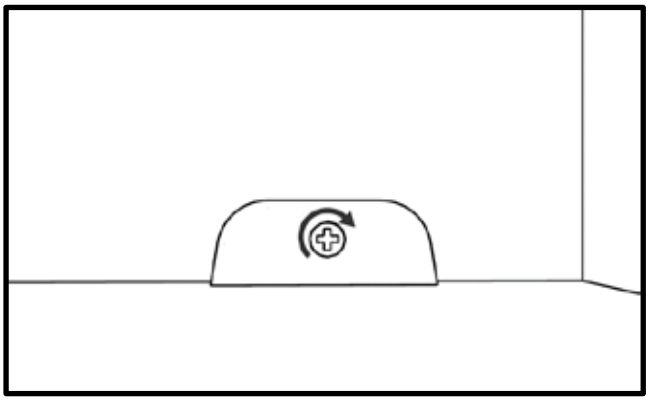

TOE KICK ASSEMBLY INSTRUCTION

1. Insert two wooden dowel pins into the predrilled holes. It is recommended to use a rubber mallet.

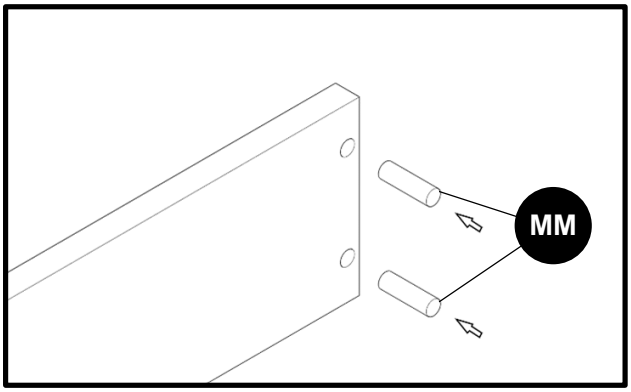

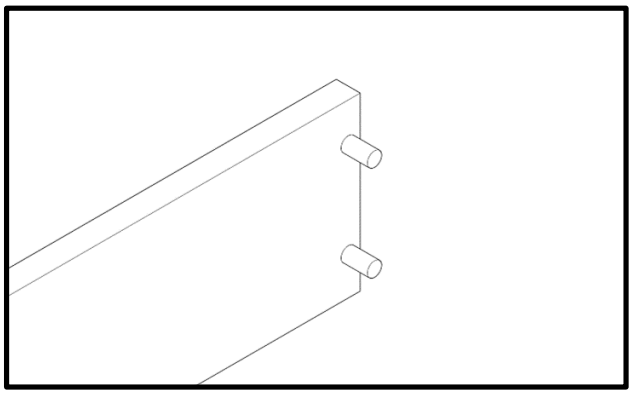

2. Insert the other part into the wooden dowel pins to connect the 2 parts.

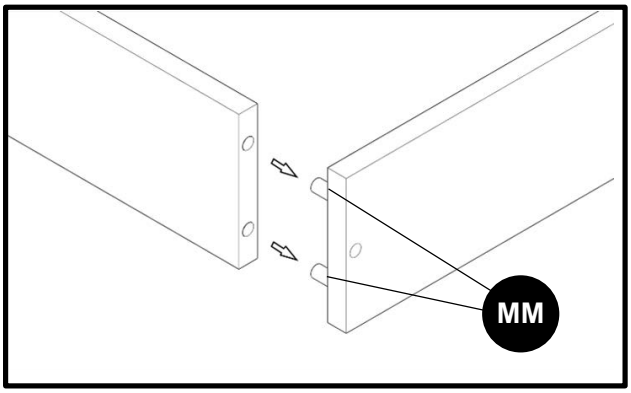

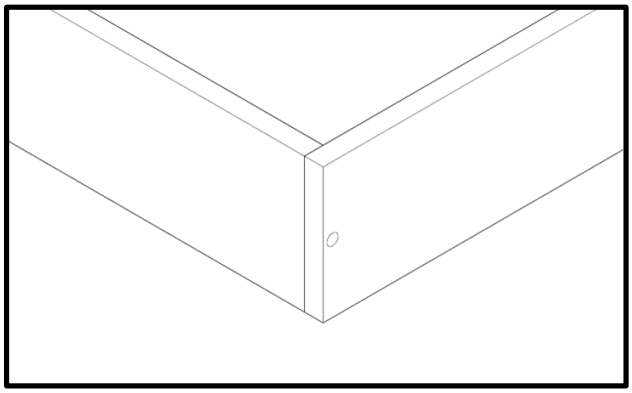

3. Drill one 1” flat head Phillips screw into the predrilled hole to secure the two parts together. It is recommended to use a screwdriver.

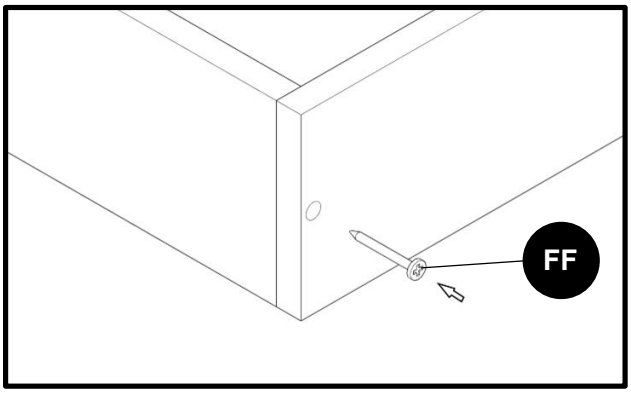

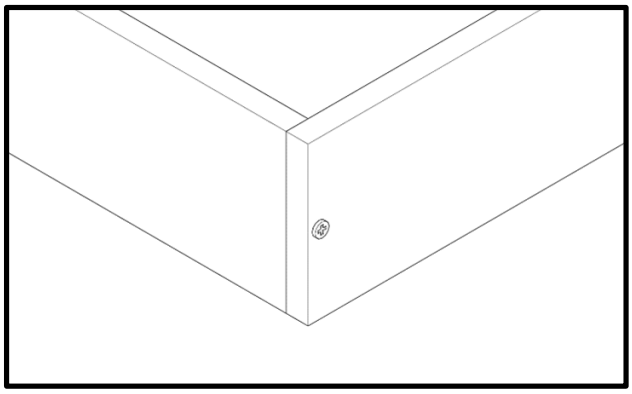

FACE FRAME ASSEMBLY INSTRUCTION

1. Insert four wooden dowel pins into one face frame, and then firmly connect the other face frame.

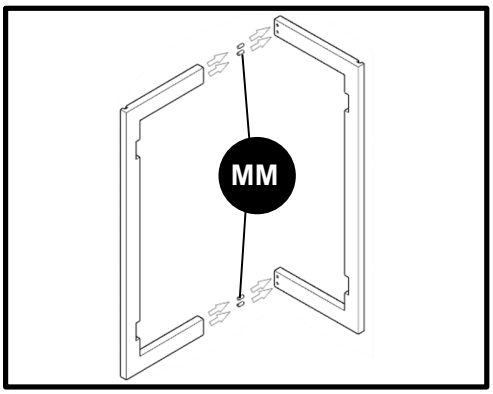

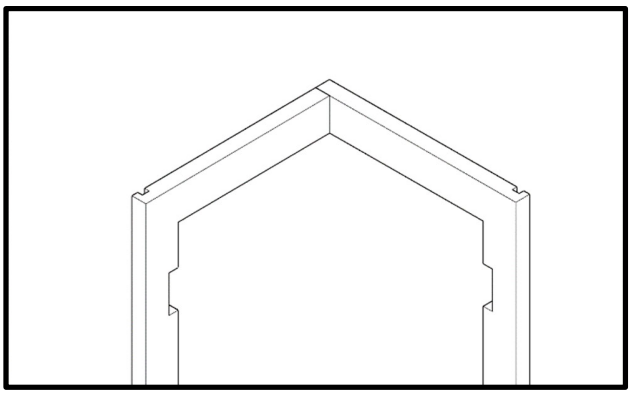

INSTALL THE REINFORCED WOOD PANEL

1. Drill two 1/2″ round head Phillips screw to the predrilled holes for each corner brace.

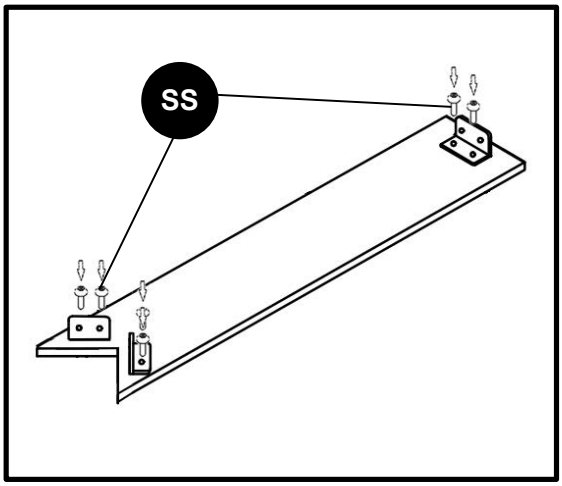

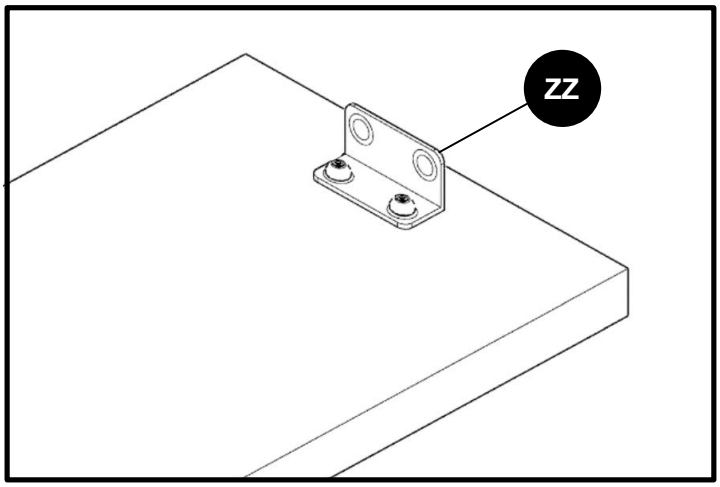

2. Stuck the reinforced wood panel between the face frame and the cabinet back panel. Then, drill two 1/2″ round head Phillips screw for each corner brace to firmly connect the reinforced wood panel with cabinet back panel and face frame.

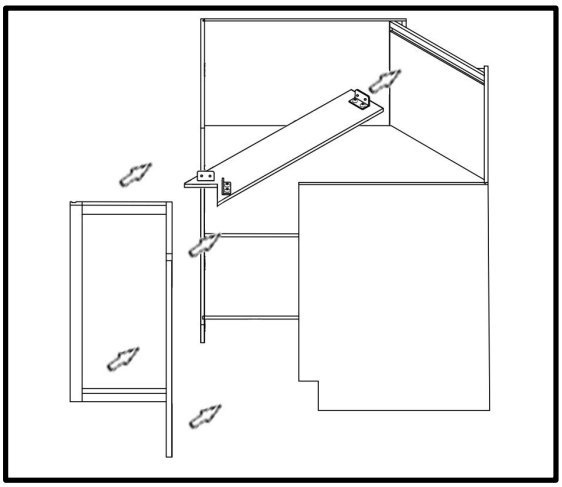

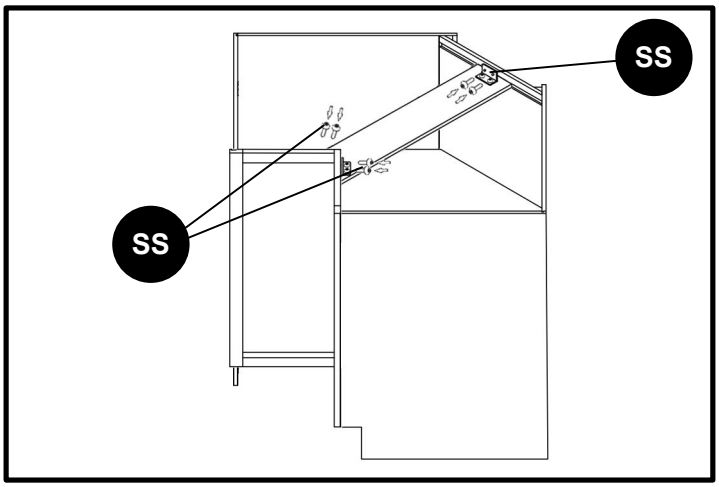

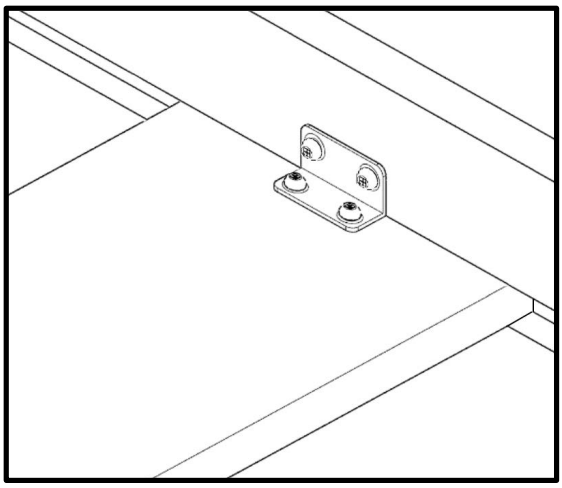

CORNER CABINETS DOOR ASSEMBLY

1. Insert two 1/2” flat Phillips screws through one 165-degree hinge into the predrilled holes on door panel Z1.

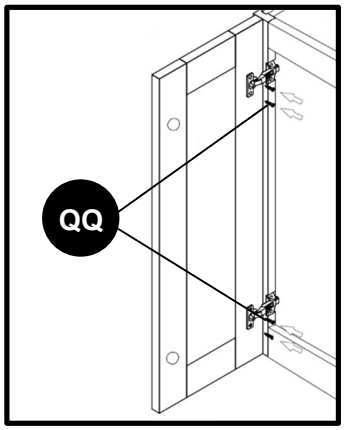

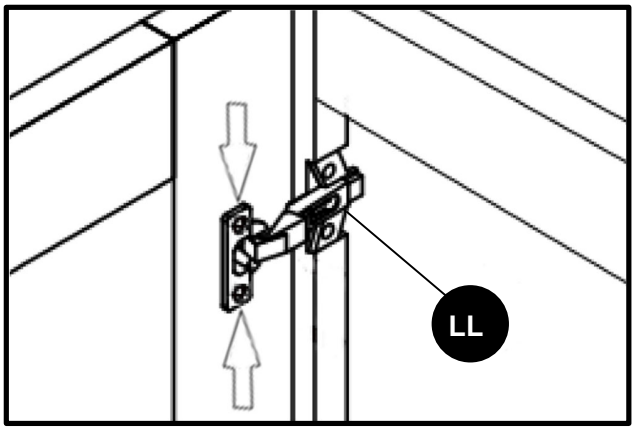

2. Insert two 3/4” round Phillips screws through one 165-degree hinge into the predrilled holes on face frame.

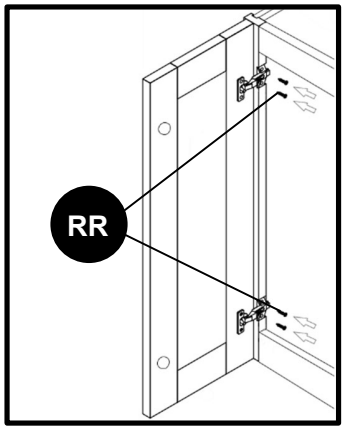

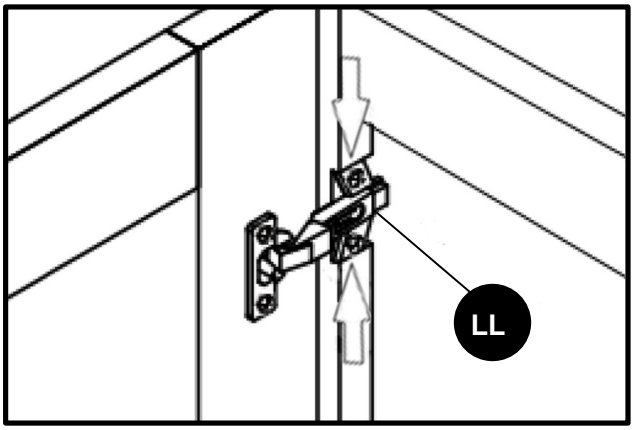

3. If the door is not level when it is installed, the customer will need to turn the inner screw 1 to adjust the door up and down, and turn the screw 2 to adjust the door forward and backward.

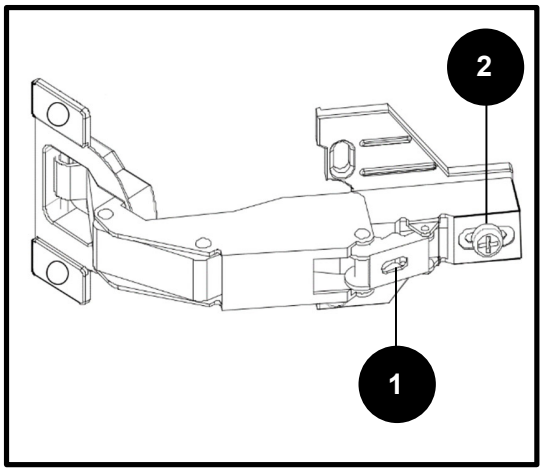

CORNER CABINETS DOOR ASSEMBLY

4. Insert four 1/2” flat Phillips screws through one 135-degree hinge into the predrilled holes on door panel Z1 and door panel Z2.

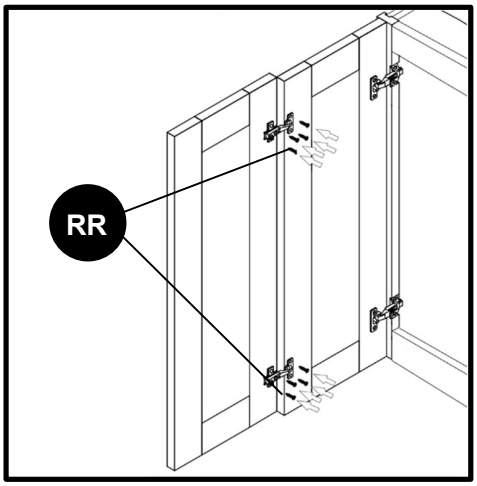

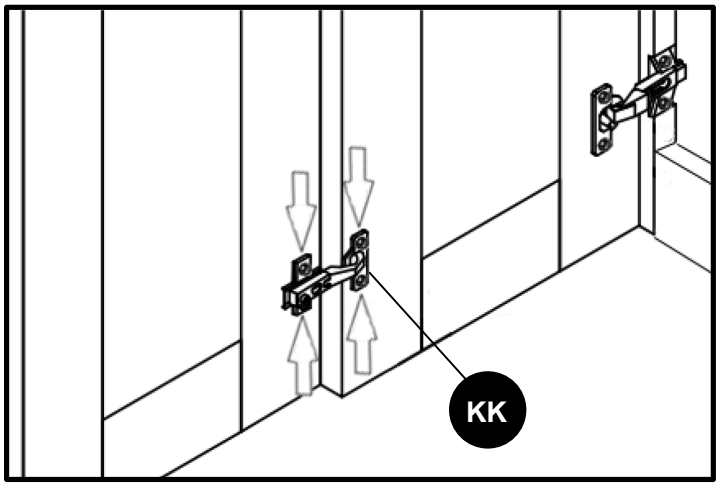

5. The customer can turn screw 1 to adjust the gap between door panels, turn screw 2 to adjust the door up and down, turn screw 3 to adjust the door forward and backward.

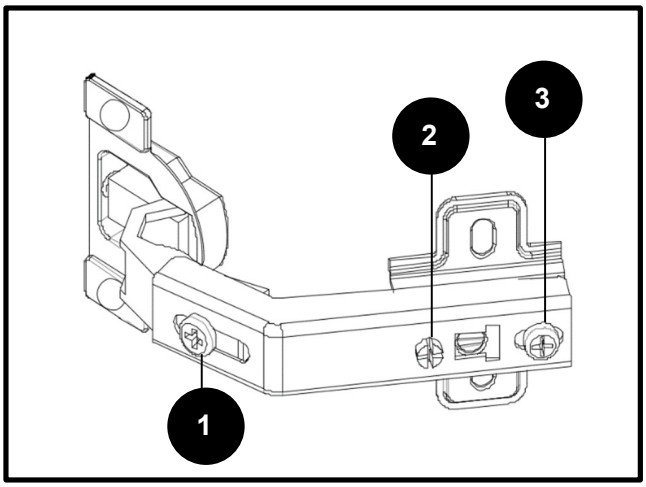

6. To reverse the door, unscrew the 3/4” round head Phillips screws from hinge RR and carefully remove the door panel. Then, reverse the door panel and drill the 3/4” round head Phillips screws to each hinge through the predrilled holes on the other side of the face frame to tighten the hinges with the cabinet face frame.

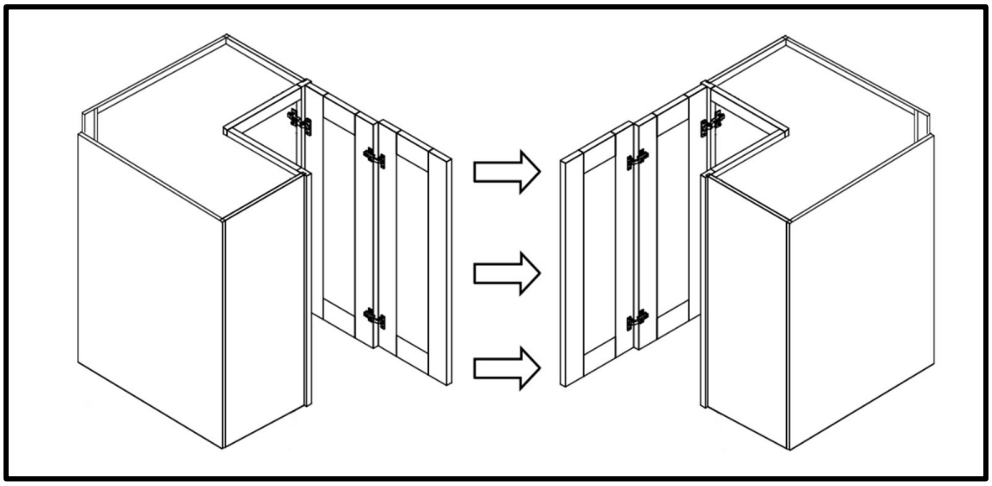

ADJUSTABLE SHELF INSTALLATION

1. Insert four shelf clips into the pre-drilled holes on the inner side of cabinet box side panels at the same height for one shelf.

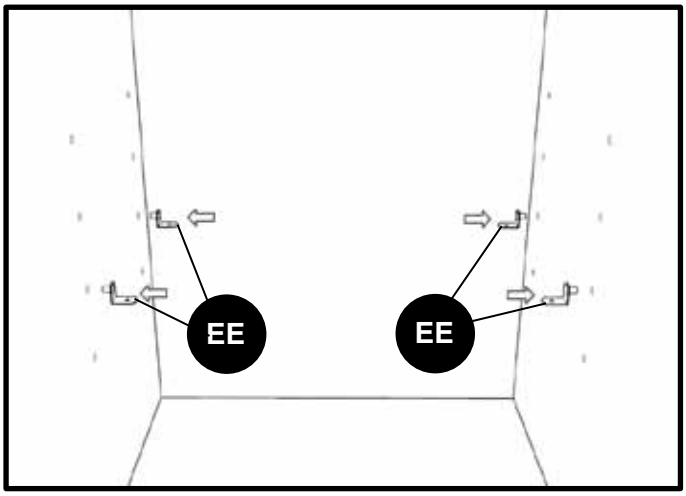

2. Insert the adjustable shelf at a tilted angle.

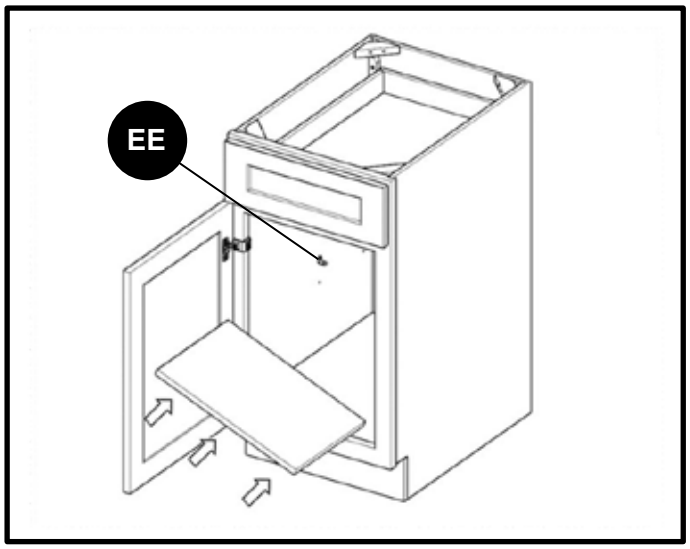

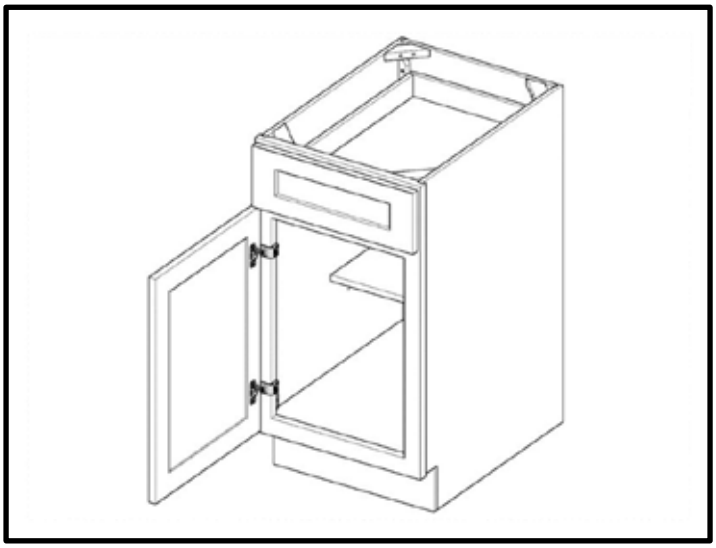

COUNTER CORNER BLOCK INSTALLATION

1. Place one counter corner block at the corner, align it with cabinet box panel. Hold it and use two 1” flat head Phillips screw to install the counter corner block. The use of a screwdriver is recommended.

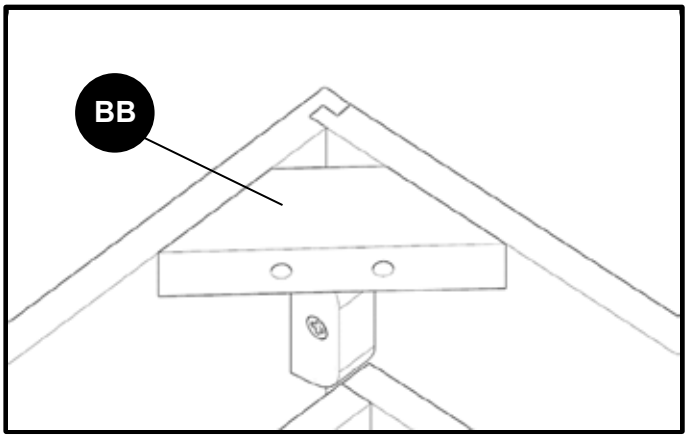

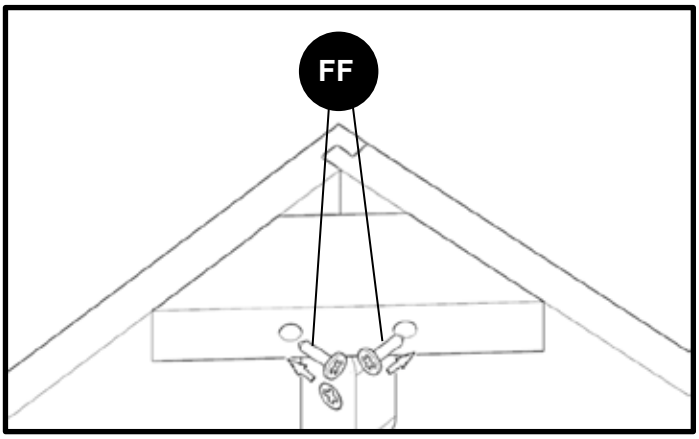

2. Install the other counter corner blocks in the same way.

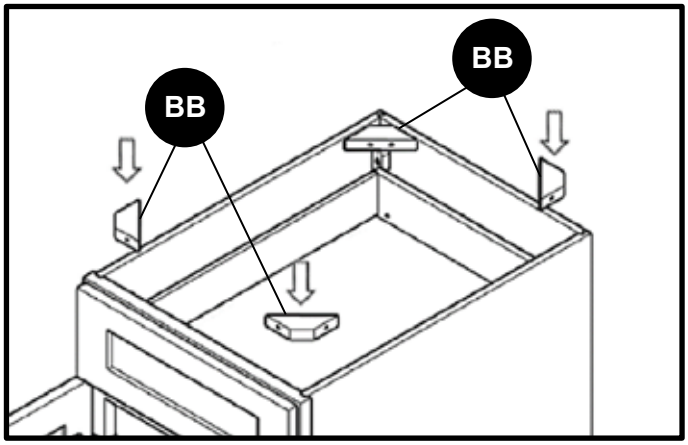

FASTEN BOX BOTTOM PANEL AND BOX BACK PANEL

1. Drill 1” flat head Phillips screw to the predrilled holes and fasten box bottom panel with box back panel

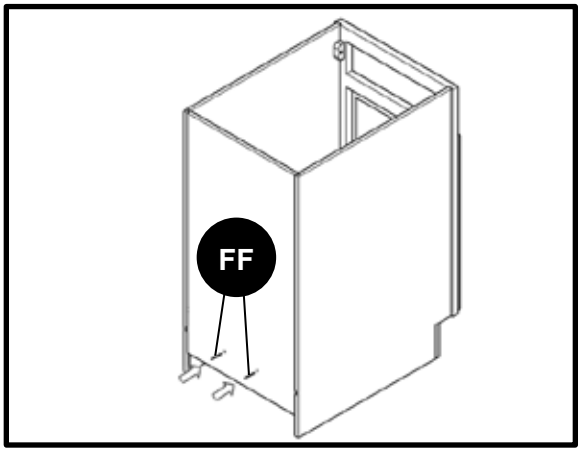

RUBBER BUMPER INSTALLATION

1. Attach rubber bumpers to 4 corners of each drawer face panel and 2 outsider corners of each door panel.

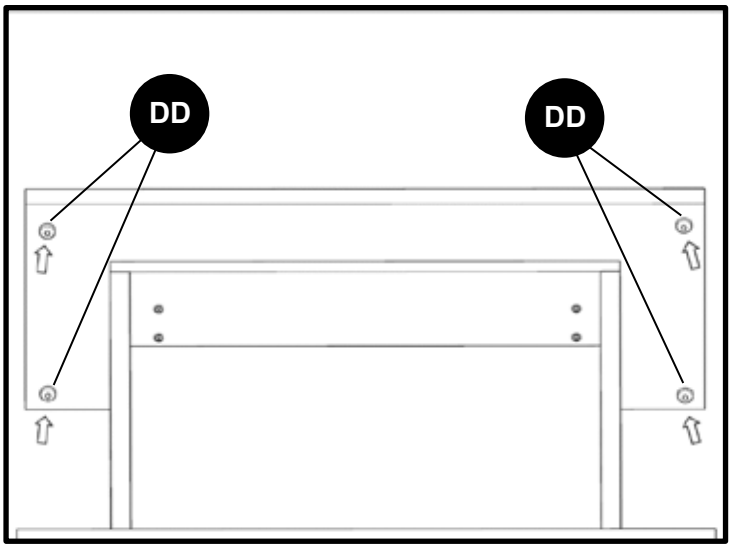

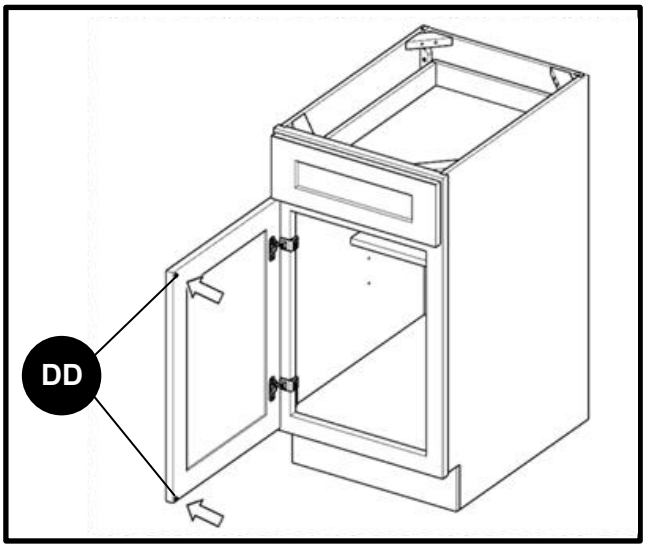

LAZY SUSAN TRAY INSTALLATION (FOR LSB33 AND LSB36)

1. The tray diameter is 26-3/4 inches, and the height is 1-13/16 inches. Take the adjustable shelf out and place one tray on the cabinet bottom panel. Line up the tray pie cutout and the cabinet bottom panel. Make sure the tray can spin without hitting the face frame.

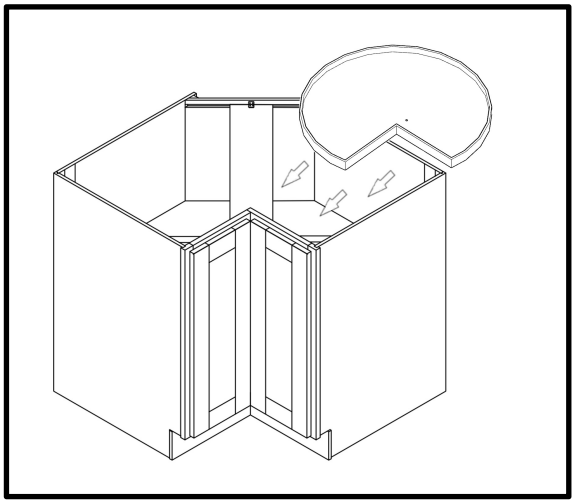

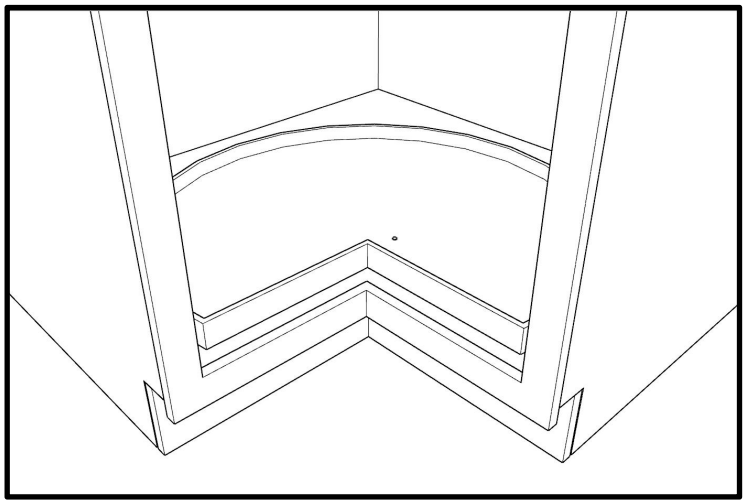

2. Locate the predrilled hole and remove the plastic hole blocker. Line up the predrilled hole on the shelf with the hole on the underneath turntable. Drill one 1/2” self-tapping screw to connect the turntable to the cabinet bottom panel.

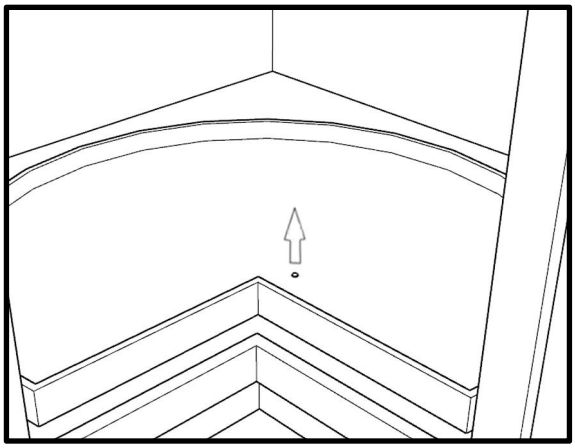

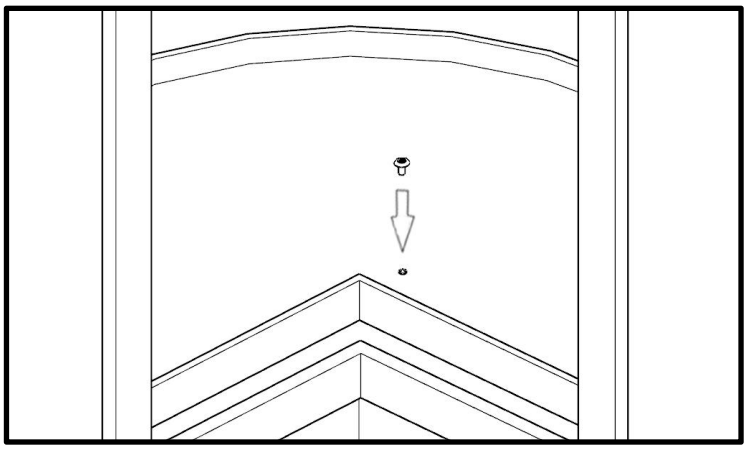

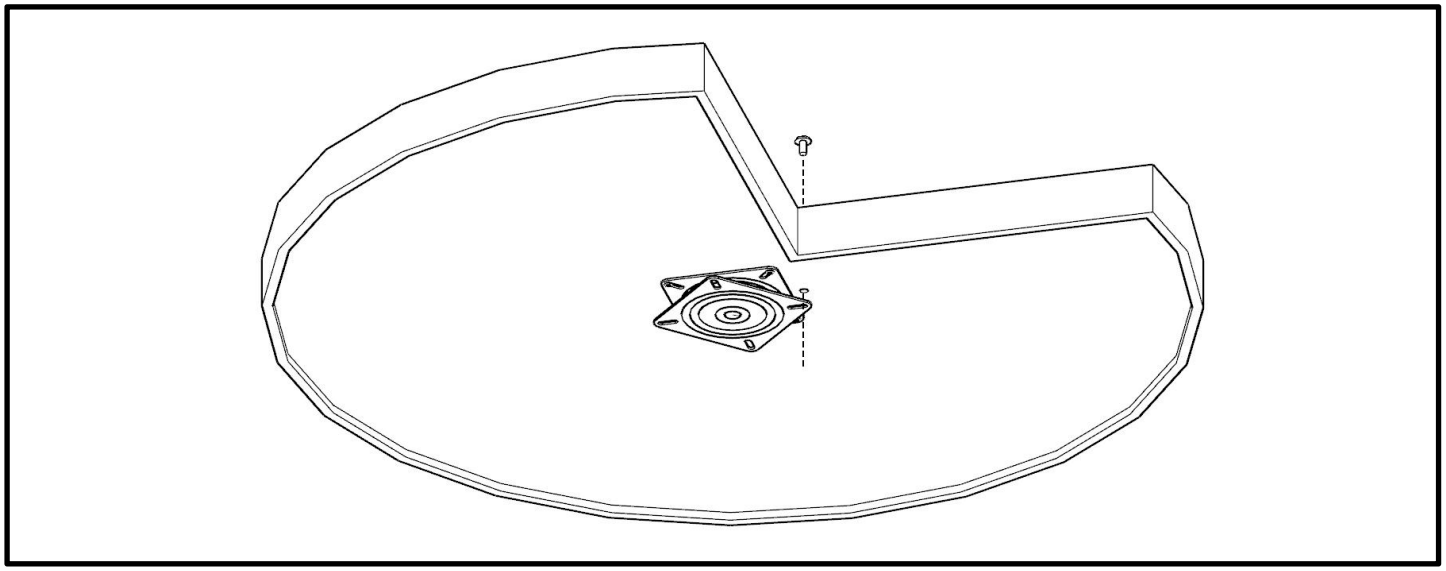

LAZY SUSAN TRAY INSTALLATION (FOR LSB33 AND LSB36)

3. Spin the tray to line up the other three holes and drill one 1/2” self-tapping screw for each hole to secure the tray to the cabinet bottom panel.

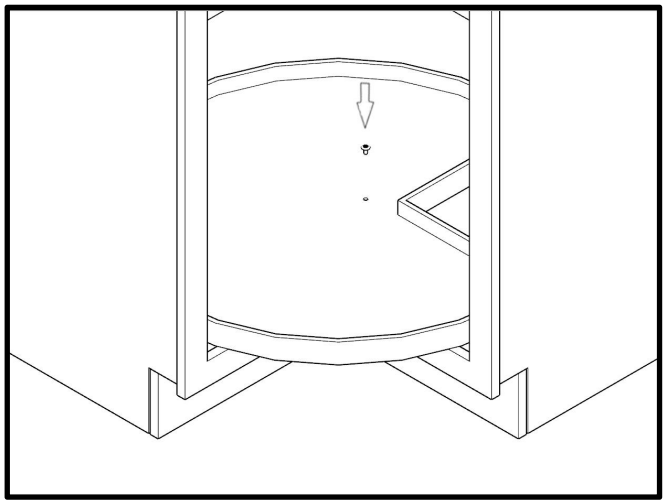

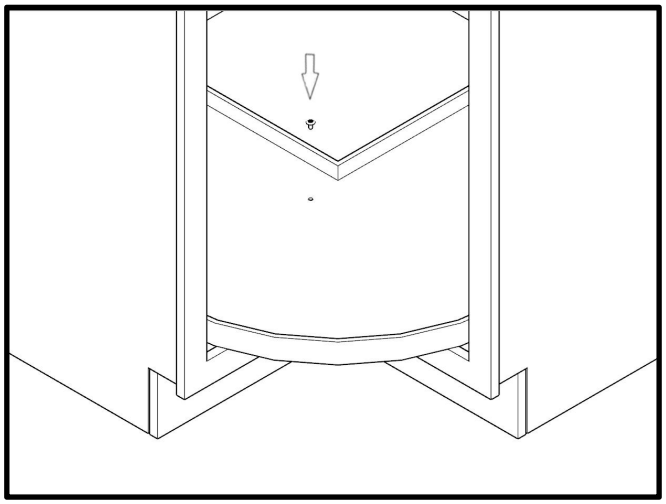

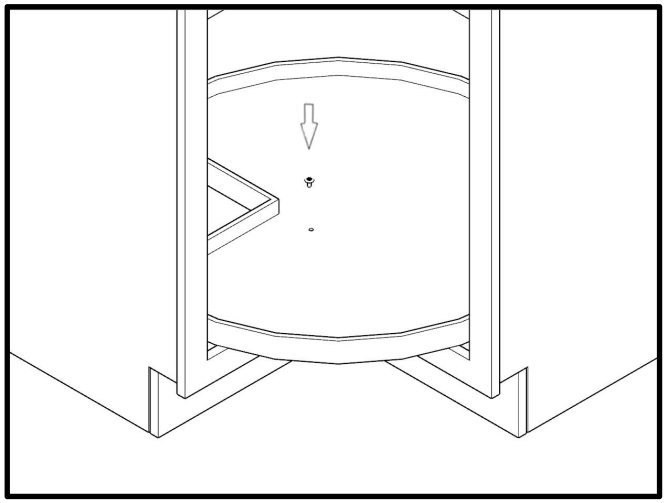

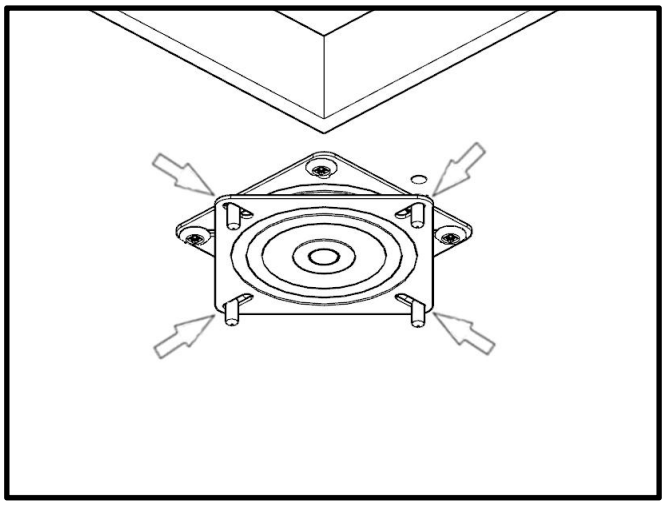
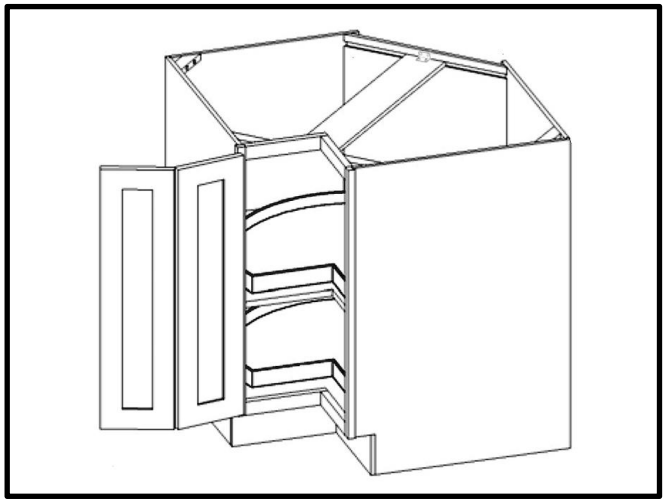
4. Put the adjustable shelf back and follow the same steps to install the other tray on the adjustable shelf.