24 INCH DISHWASHER MATTE BLACK

DW24X8BA00

FEATURES & BENEFITS

- **Open Dry:** Enhances air circulation for effective and even drying, ensuring dishes are completely dry and free from residual moisture.
- **8 Wash Cycles with Flexible Modes:** Offers 8 wash cycles, including Auto, Heavy, Eco, Normal, Express, Rinse, Lightning, and Delicate modes, providing flexibility for everything from heavily soiled pots to delicate glassware.
- **Three-Tiered Spray Arms:** Equipped with top, upper, and lower spray arms, this dishwasher delivers comprehensive coverage, thoroughly cleaning every dish from all angles.
- **Wine Glass Bracket:** Designed to securely hold delicate glassware, ensuring wine glasses and other fragile items are spotless and intact after each wash.
- **Height-Adjustable Upper Basket:** The upper basket can be adjusted to different heights, allowing you to create space for larger or taller items in the lower rack.
- **Third Rack:** Provides additional space for organizing smaller utensils and kitchen tools, keeping them separate and secure during the wash cycle.
- **Status Indicator Light:** Displays a clear visual indication of the dishwasher's progress, allowing you to easily monitor the current wash cycle without needing to open the door.
- **Interior LED Lighting:** Automatically illuminates the tub's interior when opened, providing clear visibility and added convenience for loading and unloading.

Product: Gordon Ramsay by THOR Kitchen 24 Inch Dishwasher Matte Black
Model Number: DW24X8BA00

TECHNICAL DETAILS

Volts	120V
Frequency	60Hz
Rated Power Usage	220kWh/per year
Noise Level	45 dBa
Power Cord Length	No Power Cord Included
Water Feed Pressure	20-120psi
Inlet Water Temperature	120ºF (49ºC)
Inlet Hose Length	59"/ 1500mm
Outlet Hose Length	59"/ 1500mm

WARRANTY: 2 YEARS PARTS AND LABOR

24 INCH DISHWASHER MATTE BLACK

DW24X8BA00

STAINLESS STEEL
DW24X8BA00-SS

BLUE
DW24X8BA00-BLU

BRONZE
DW24X8BA00-BRZ

ROSE GOLD
DW24X8BA00-RSG

CONTROL PANEL DETAILS / FEATURES

Load Capacity (Place Settings)	15
Number Of Wash Cycles	8
Water Consumption	3.2 Gal
Tub Material	Stainless Steel
Number Of Racks	3
Rack Adjustability	Height Adjustable Upper Rack
Control Type	Touch
Water Softener	No
Childlock	Yes
Status Indicator	Yes (Red)
Tub Light	Yes (Led, 2)
Hidden Heating Element	Yes
Wine Glass Bracket	Yes
Third Layer Cutlery Basket	Yes
Basket Handles /Outdoor Handles	Yes

24 INCH DISHWASHER MATTE BLACK

DW24X8BA00

PRODUCT DIMENSIONS & WEIGHTS

Product Dimensions (WxDxH)	23 7/8'' x 22 5/8'' x 33 7/8''
Product Depth With Handles	25 1/8''
Cutout Dimensions (WxDxH)	23 13/16''-24'' x 22 7/8''-23 5/8'' x 34''-35 1/2''
Net Weight	82.7 lbs
Package Dimensions (WxDxH)	28 3/4'' x 28 3/4'' x 35 1/16''
Package Weight	100 lbs

ACCESSORIES INCLUDED

Drain Hose

ACCESSORIES NOT INCLUDED

Power Cord

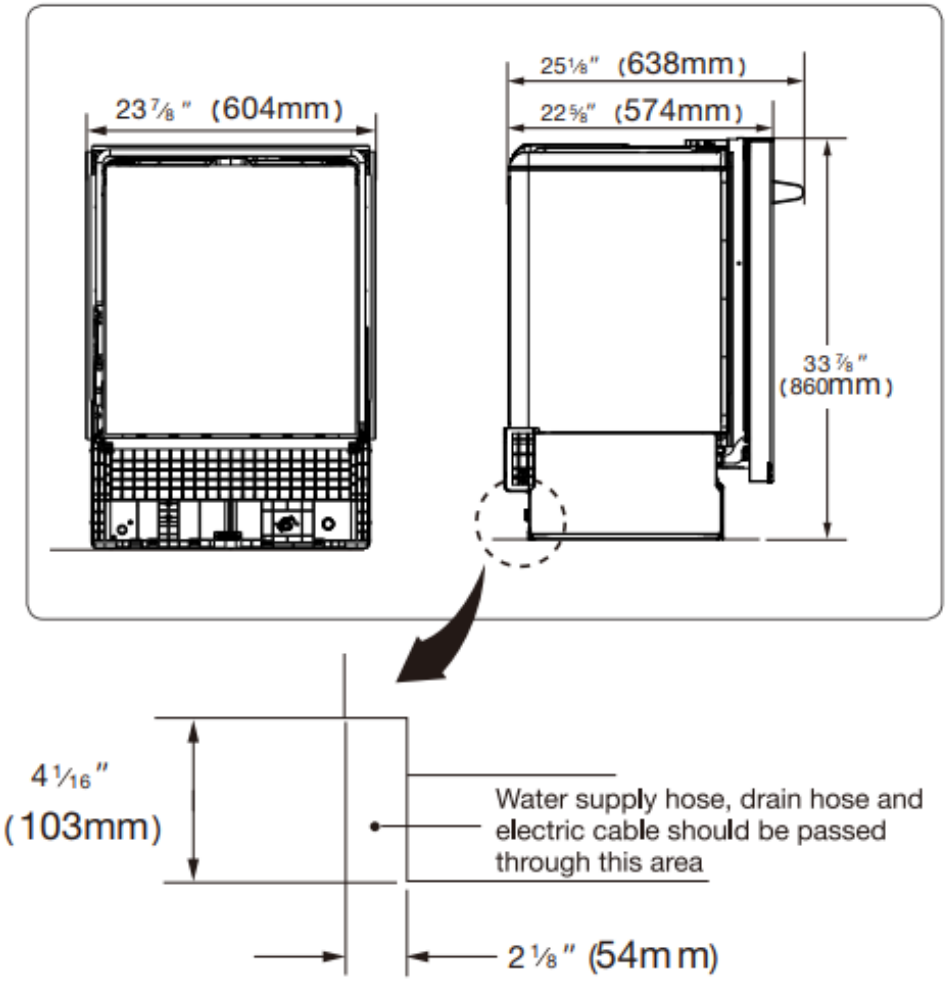

REV.082024.DW24X8BA00