ASSEMBLY INSTRUCTIONS

Thank you for purchasing our product.
We appreciate your trust and hope you enjoy your new furniture.

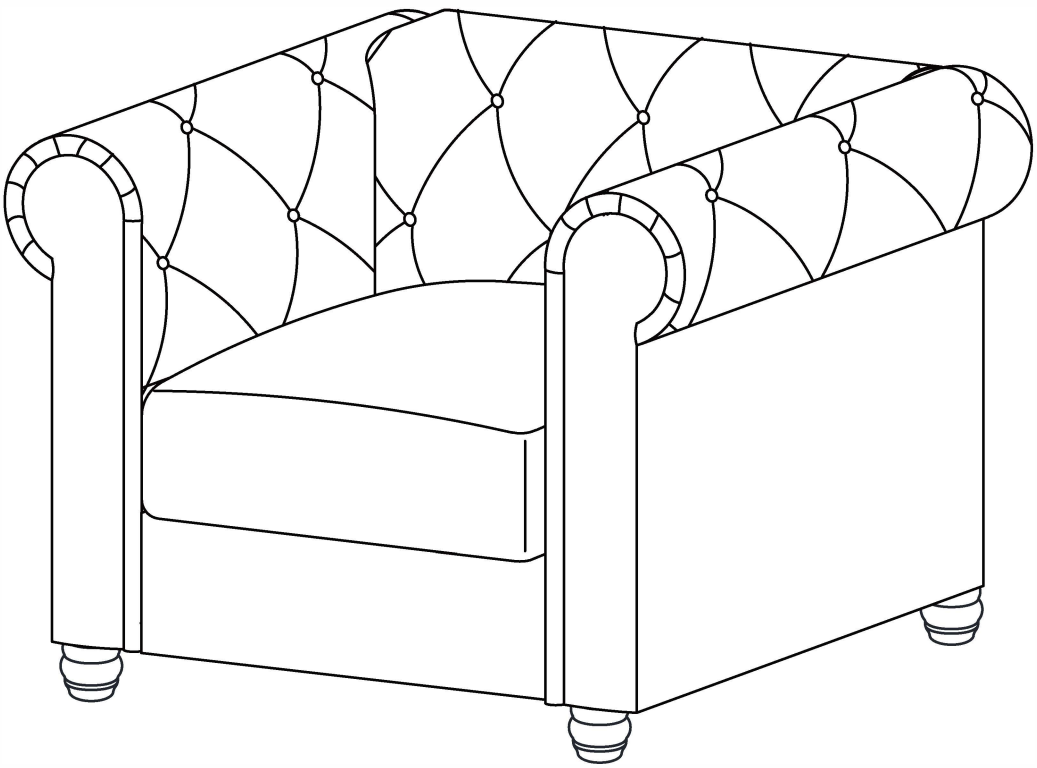

Notice:

1.Place a protective mat or cloth on the floor to prevent scratches.
2.Follow these assembly instructions. Make sure all parts and hardware are included before starting.
3.Do not fully tighten the bolts during assembly.Tighten them only after all parts are properly aligned.
4.If you have any questions, please contact our customer support team or call us directly.



Recommended Assembly: 2 people

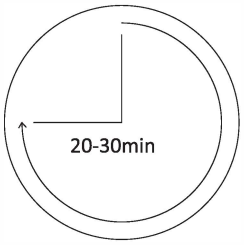

Estimate installation time

Assembly Explosion Diagram

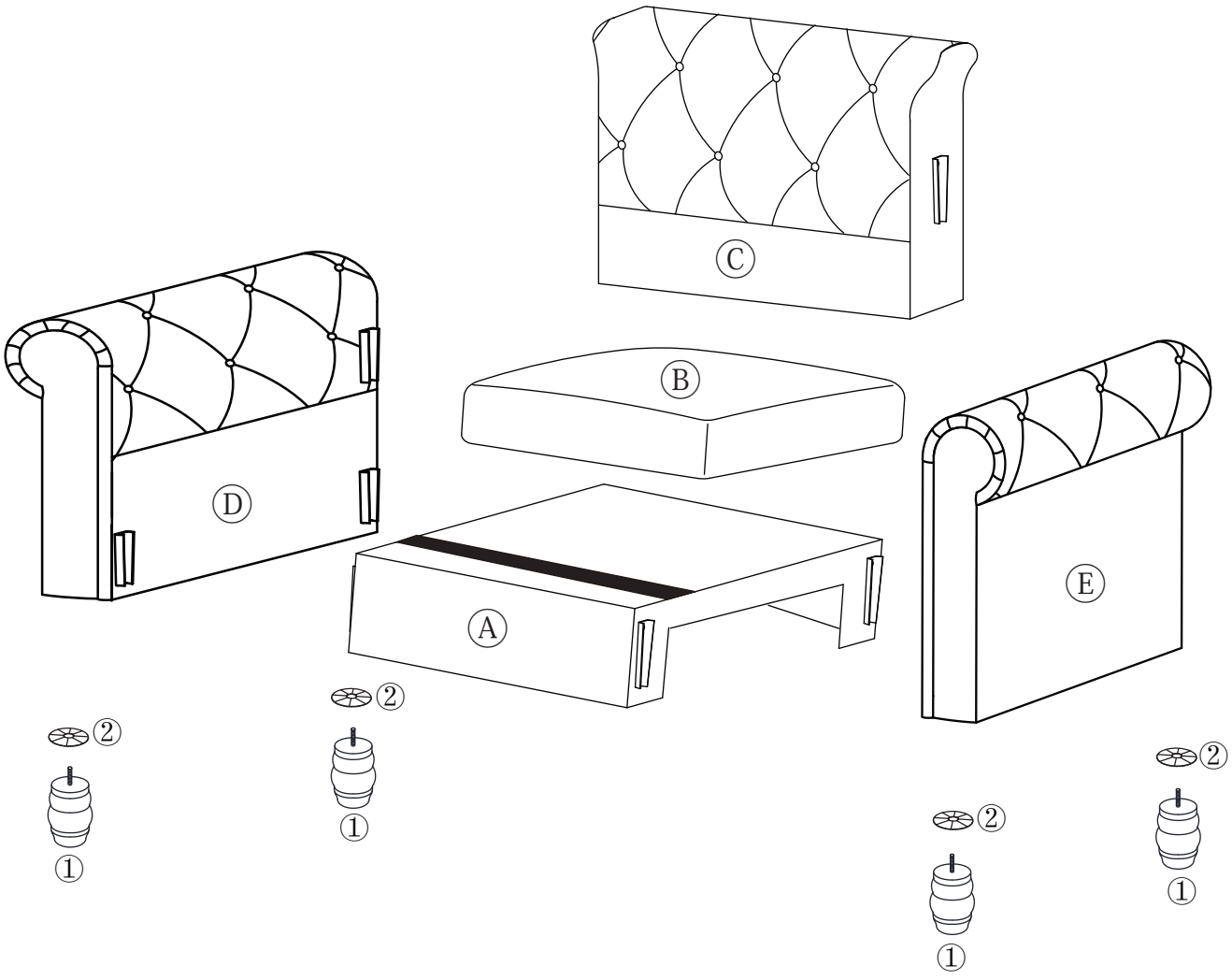

Hardware

① x 4 pcs	② x 4 pcs
	
WOODEN LEG	PLASTIC WASHERS

Parts

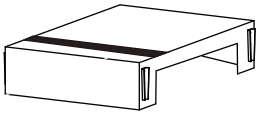

Ⓐx1PC

SEAT FRAME

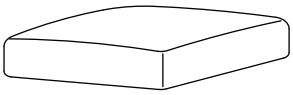

Ⓑx1PC

SEAT CUSHION

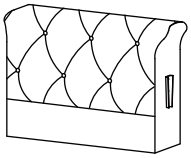

Ⓒx1PC

BACKREST

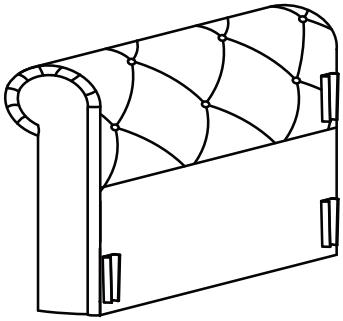

Ⓓx1PC

LEFT ARM

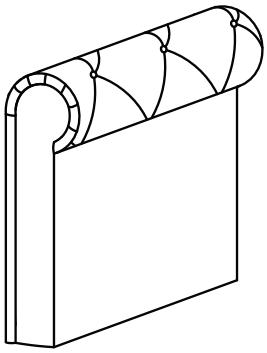

Ⓔx1PC

RIGHT ARM

1

Place the Seat Frame Ⓐ on a flat, protected surface.

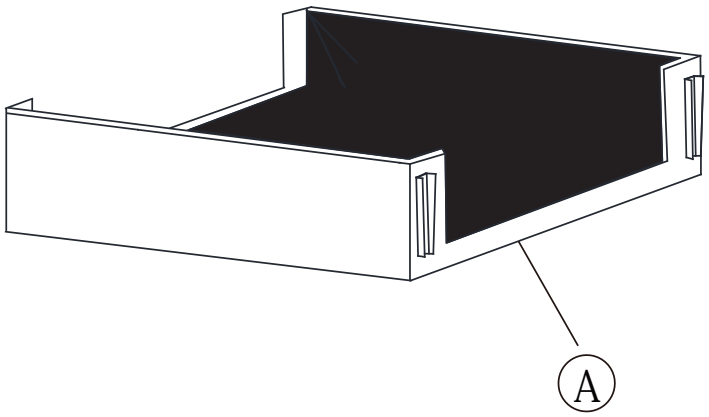

2

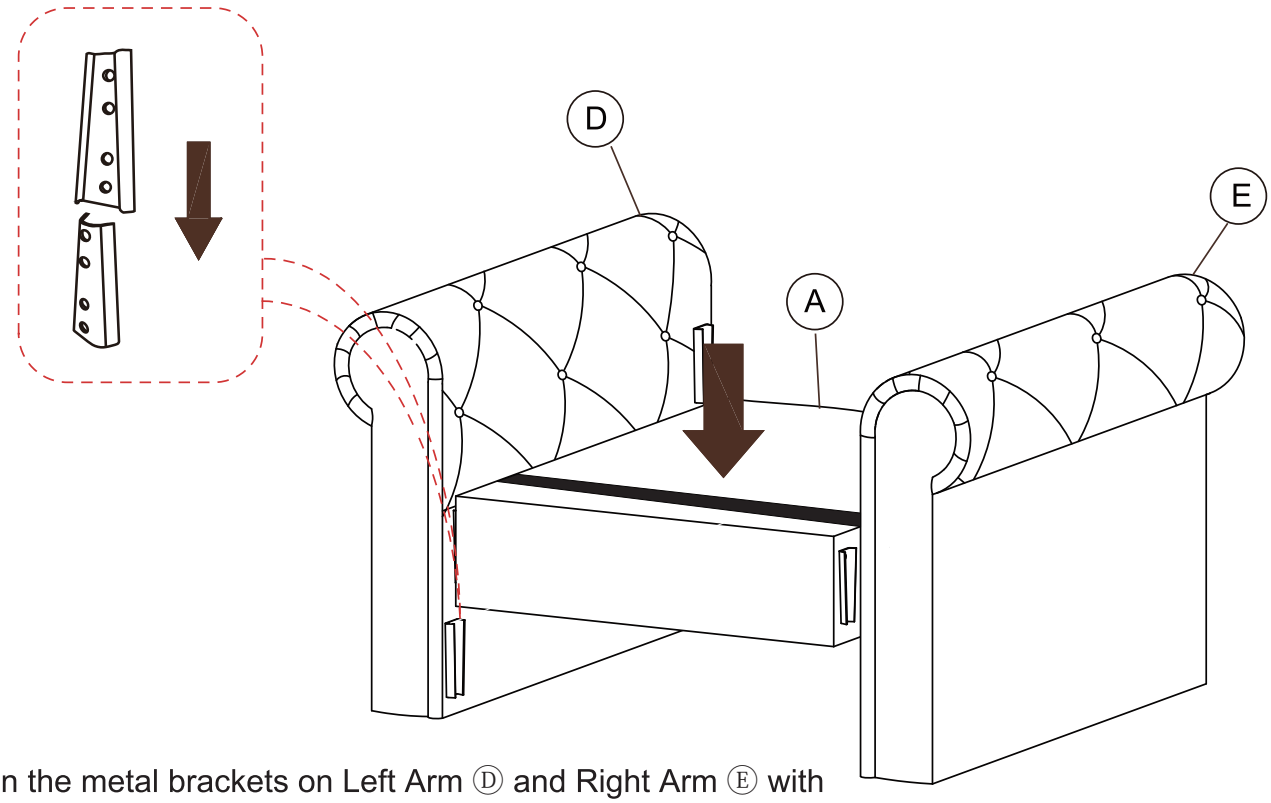

Align the metal brackets on Left Arm Ⓓ and Right Arm Ⓔ with the corresponding inserts on both sides of the Seat Frame Ⓐ. Push down firmly until the arms are securely locked and flush with the frame.

3

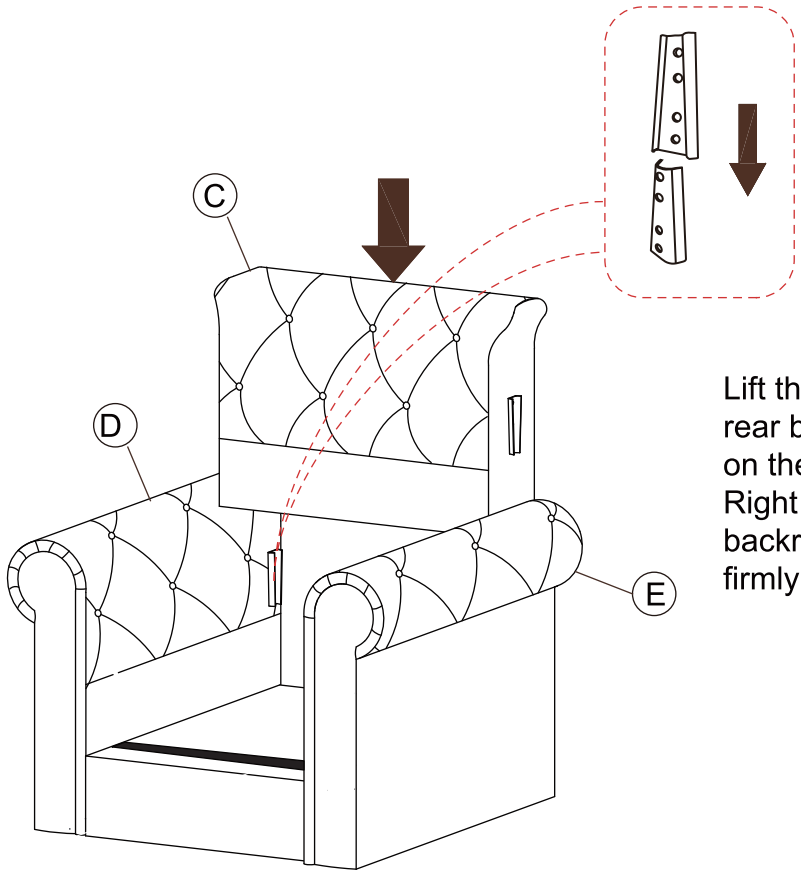

Lift the Backrest Ⓒ and align its rear brackets with the metal slides on the inner sides of the Left and Right Arms (Ⓓ & Ⓔ). Slide the backrest down steadily until it is firmly seated.

4

① x 4 pcs	② x 4 pcs
	
WOODEN LEG	PLASTIC WASHERS

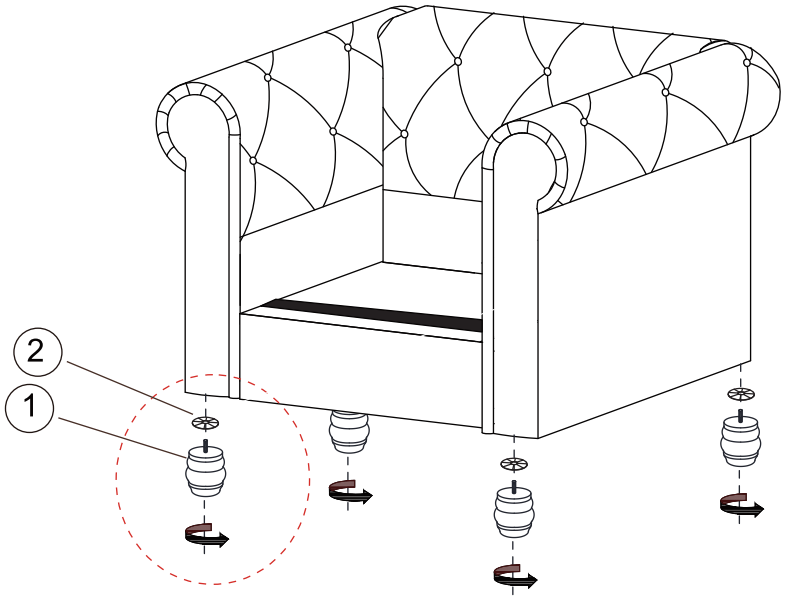

Slide a Plastic Washer ② onto the bolt of each Wooden Leg ①. Thread the leg into the pre-drilled hole at each corner of the sofa bottom. Turn counterclockwise until the leg is tightly secured and perpendicular to the floor.

5

Place the Seat Cushions Ⓑ onto the Seat Frame Ⓐ. Adjust the cushions so they fit snugly against the arms and backrest.

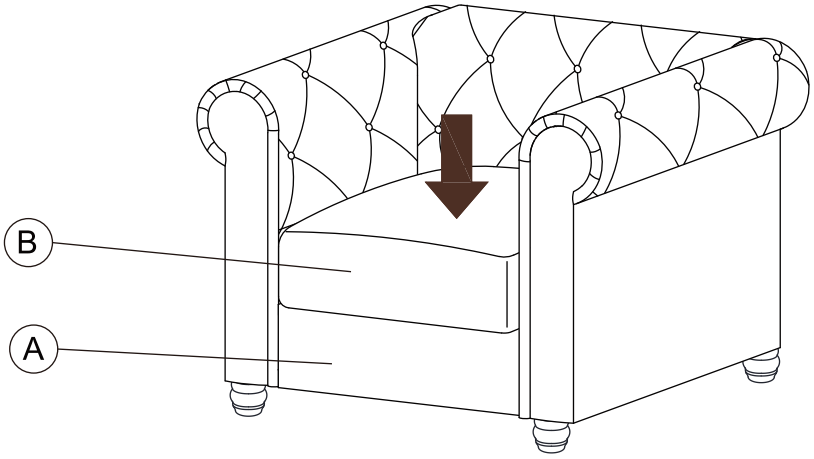

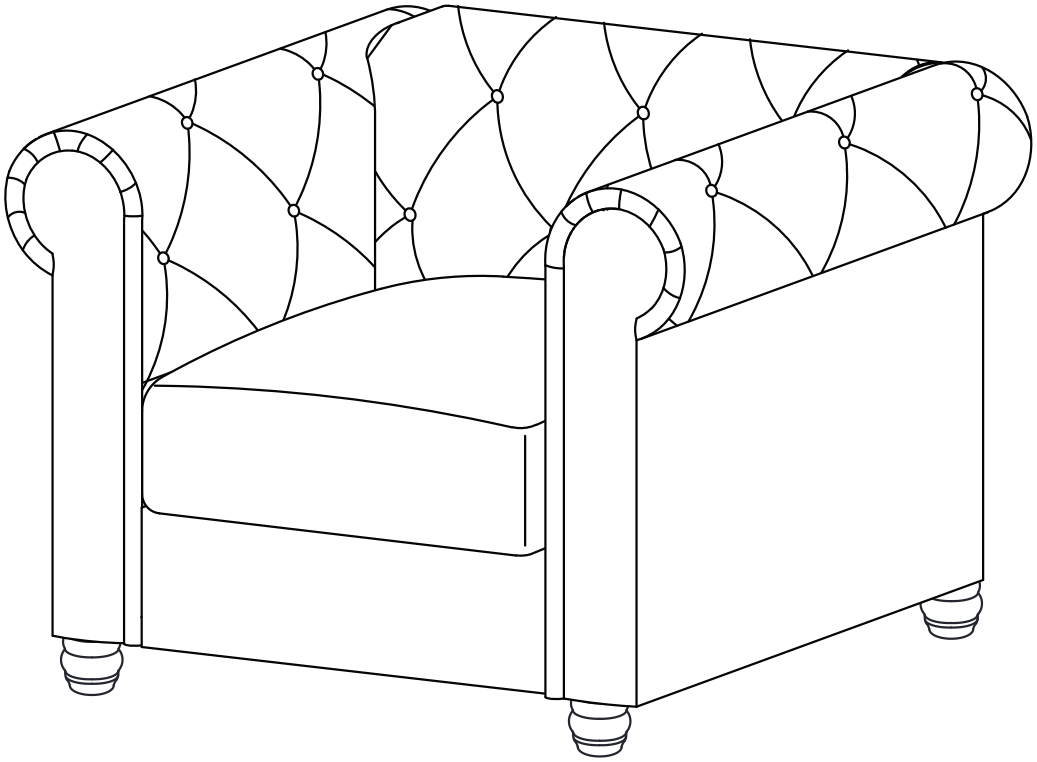

Completed