Assembly Instructions
ITEM NO.:90340

Thank you for purchasing this quality product. Be sure to check all packingmaterial carefully for small parts that may have come loose inside the carton during shipment. (Note: Loosely thread all screws/bolts first. Once the item is assembled then completely tighten.)

PARTS LIST:

NO.	Description	Sketch	Quantity
A	Top		1pc
B	Leg		4pcs

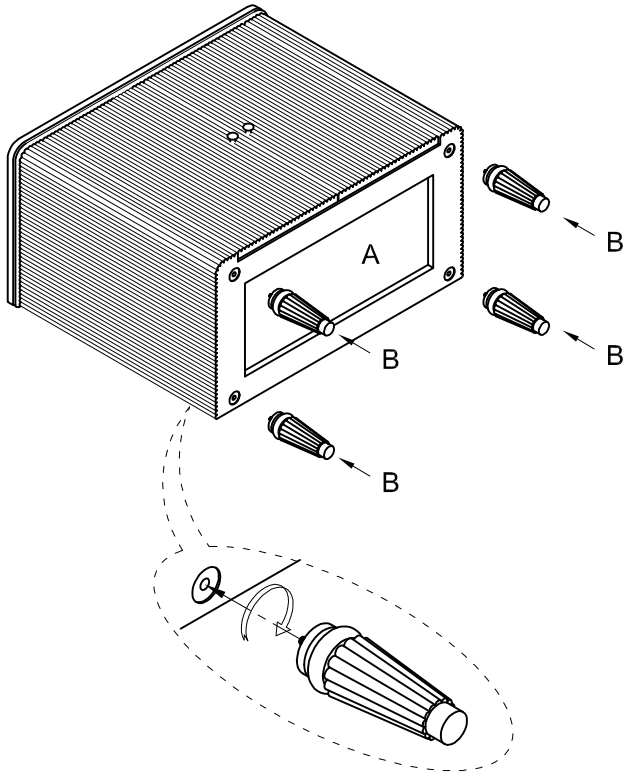

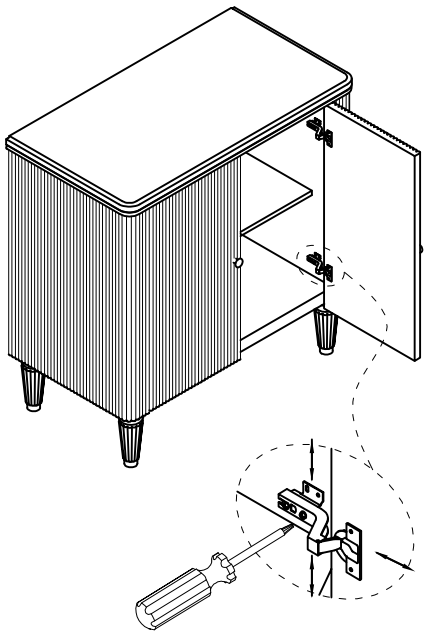

Tips B: If Tip A does not correct, you might want to take it a step further and try adjusting the hinges on the door.Please refer to the step by step figure instructions.

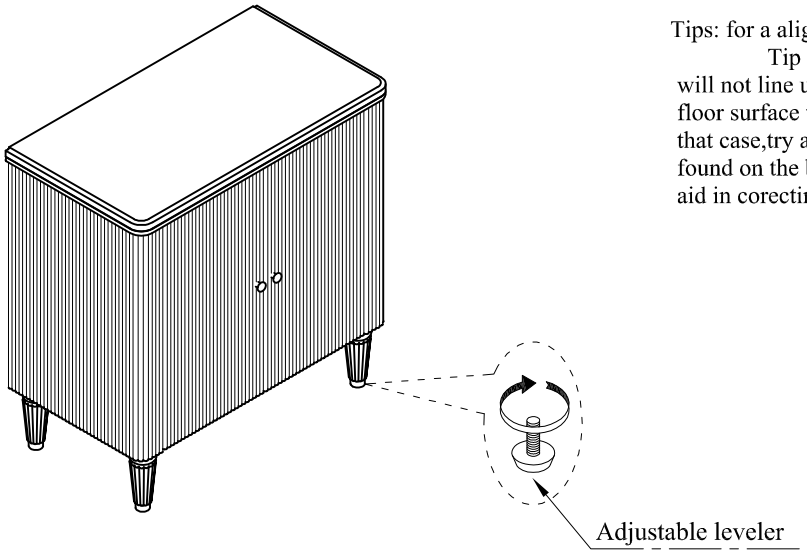

Tips: for a aligning doors:

Tip A:Sometimes the doors will not line up because of an uneven floor surface the furniture reats on.In that case,try adjusting the levelers found on the botton of each foot to aid in corecting.