JAMIE YOUNG Cº

CORSET CHANDELIER

5CORS-CHNA

SAFETY, INSTALLATION & CARE INSTRUCTIONS

SAVE THESE INSTRUCTIONS

IMPORTANT SAFETY INSTRUCTIONS

READ THESE INSTRUCTIONS COMPLETELY BEFORE STARTING

We strongly recommend that all direct-wired lighting products be installed by a licensed electrician. Two people may be required for installation. DO NOT EXCEED the rated bulb wattage. Keep flammable materials away from bulb. This light fixture is shipped with all internal wiring intact. Do not open the product or alter the wiring in any manner.

Installation requires an electrical junction box in the wall sufficient to support the weight of the fixture.

This fixture weighs: 8.200 Kgs / 18.000 lbs

WARNING: Be certain that the power to the electrical junction box is turned off at the Circuit breaker before installation. Turning the power off at a light switch is not Sufficient to prevent electrical shock.

CAUTION: Prior to installation, locate All INCLUDED PARTS before disposing of packaging materials.

Tools Required For Installation	
Screwdriver	Pliers
Electrical Tape	Wire Connectors
Wire Cutters	Adjustable Wrench

Parts not included but required	
A.	Ceiling Outlet Junction Box
B.	Ground Junction Box Wire
C.	Hot Junction Box Wire
D.	Neutral Junction Box Wire

Parts Included / Referenced (See Figure 1):			
E.	Pendant Cord	K.	Neutral Fixture Wire
F.	Mounting Bracket	L.	Wire Connectors
G.	Mounting Screws	M.	Canopy
H.	Ground Screw	N.	Canopy Screws
I.	Ground Wire	P.	Nipple
J.	Hot Fixture Wire		

JAMIE YOUNG Cº

CORSET CHANDELIER

5CORS-CHNA

SAFETY, INSTALLATION & CARE INSTRUCTIONS

Installation Procedure (Refer to figure on pg.3):

1. SHUT OFF THE MAIN ELECTRICAL SUPPLY FROM THE MAIN FUSE BOX/CIRCUIT BREAKER.
2. Carefully unpack all fixture parts and hardware and lay them out on a clean work surface.
3. Determine the desired lighting fixture suspension length from the ceiling, allowing 8' of extra cord length for the Ceiling Outlet Junction Box (A) wire connections as noted below.
4. Adjust the fixture's power cord from the canopy (M) based on the measurement taken in above step.
5. If needed, cut off any extra length of wire cord cable (E). When cutting the power cord, be sure to cut it so that it is at least 6" (152.4mm) long inside the Ceiling Outlet Junction Box (A). To prepare the cut power cord for installation process, use wire strippers to prepare the ends of the two wires so that there is about 1/2" of exposed wire for the Plastic Wire Connectors (L).
6. Gently pull existing Ground Wire (B), Hot (C), and Neutral (D) Junction Box Wires down from the Ceiling Junction Box (A) and allow them to hang.
7. Carefully inspect the chandelier's fixture wires. The Neutral Fixture Wire (K) is White. The Hot Fixture Wire (J) is Black, and the Ground Wire (I) is Green.
8. Attach the Ground Wire (I) from the fixture to the Ground Junction Box Wire (B); it usually has green insulation around it or is bare wire. Fasten them together with a Wire Connector (L) and wrap the connection with electrical tape. Make sure that no wire strands are exposed. If your Ceiling Outlet Junction Box (A) does not have a Ground Junction Box Wire (B), insert the Ground Screw (H) into the Mounting Bracket (F) where it's marked "Ground", and wrap the fixture's Green Ground wire around the Ground Screw (H). Tighten the screw to clamp the Ground Junction Box Wire (B) between the Ground Screw (H) head and the Mounting Bracket (F). It is imperative that the Ceiling Junction Box (A) in your home be properly grounded.
9. Connect the Neutral Fixture Wire (K) to the Neutral Junction Box Wire (D); it usually has white insulation around it. Fasten them together with a plastic wire Connector (L) and wrap the connection with electrical tape. Make sure that no wire strands area exposed.
10. Connect the Hot Fixture Wire (J) to Hot Junction Box Wire (C); it usually has black insulation around it. Fasten them together with a plastic wire Connector (L) and wrap the connection with electrical tape. Make sure that no wire strands area exposed. Do not reverse the hot and neutral connections or safety will be compromised.
11. Gently tuck the wire connections neatly into the Ceiling Outlet Junction Box (A).
12. Attach the Mounting Bracket (F) to the Ceiling Outlet Junction Box (A) using the Mounting Screws (G). Tighten screws with a screwdriver until secure.
13. Slide the Canopy up with cord and fix the Nipple (P) into the centre hole of Bracket (F)
14. Secure the canopy (M) to the ceiling by screwing the decorative screws (N) into canopy and bracket.
15. Insert Three (3) 60W- maximum Type A incandescent lightbulb (not included). Do not exceed the specified wattage.
16. Restore power to Ceiling Outlet Junction Box (A) and test the fixture.

CARE AND CLEANING

To clean, wipe the light fixture ONLY with a soft, dry cloth.

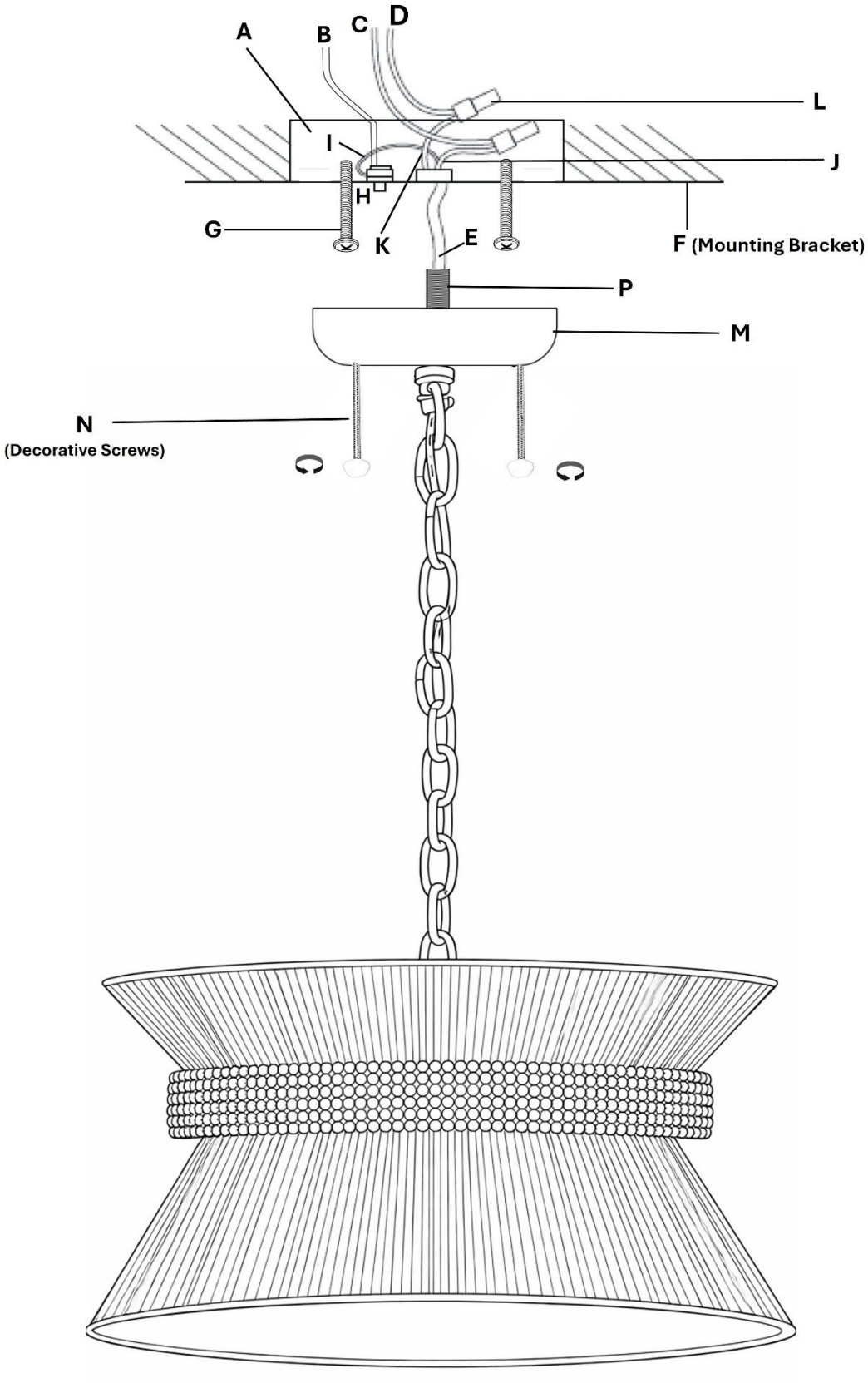
A
B
C
D
L
I
J
H
G
K
E
F (Mounting Bracket)
P
M
N
(Decorative Screws)