ASSEMBLY INSTRUCTION

This instruction booklet contains important safety information.
please read and keep for future reference.

This sofa collection works as modular sofa function, started as 2 seater sofa with left and right section, you can buy more components such as armless middle seat and ottoman to make it as 3 seater sofa, 4 seater sofa, L shape sectional, U shape sectional or sofa set. Measure your living room size before you make a decision to buy more components to ensure all sofa section are well fit your living room area.

To ensure safe and satisfactory use of this product,please carefully read the below instructions before hand.

1.This sofa ships in several boxes,we recommend unpacking and starting assembly when several boxes are received.

2.Our cushions are vacuum packed for convenient shipping. Please allow 2-3 days for them to fully expand to their original shape and for any wrinkles to disappear.

3.In the event that a part is damaged or missing,no need to return the product,we will gladly help and ship your replacement parts free of charge.

Below are some guidelines for you how you can do mix and match.

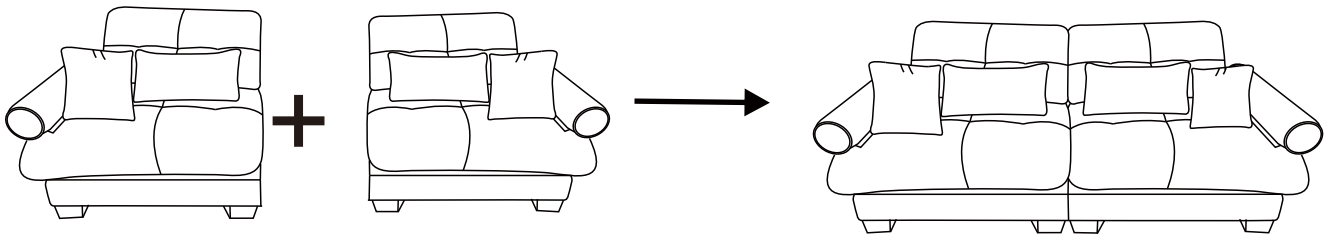

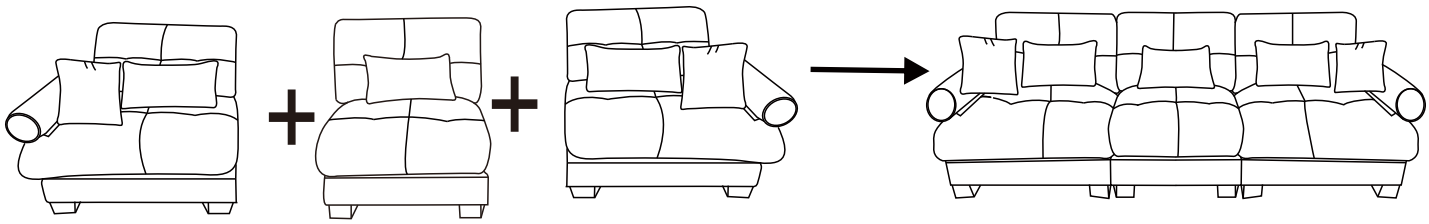

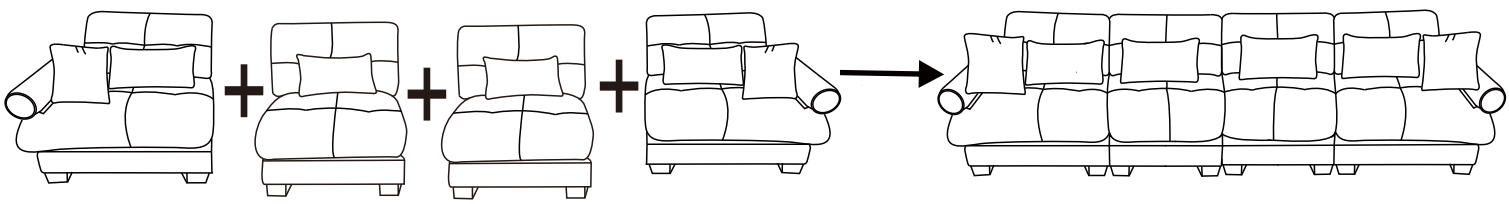

















- Read instructions, cover to cover
- Have 2 adults on hand for assembly
- Do not assemble on flooring or carpet
- Assemble on a clean non-marring surface (packing foam)
- Save all packaging until finished

Assembly Instructions

IF YOU BUY 2 SEATER SOFA
please follow below assembly instruction

Parts List

A 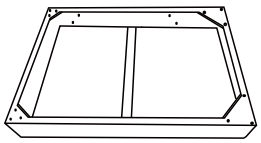 Left seat frame*1	B 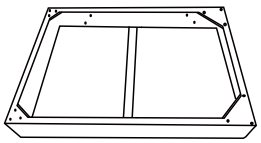 Right seat frame*1	C 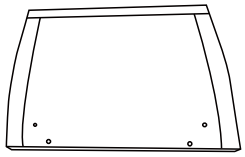 Backrest*2	D 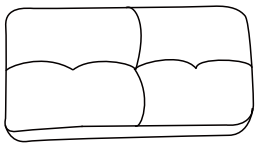 Back cushion*2
E 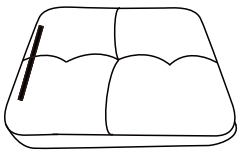 Left seat cushion*1	F 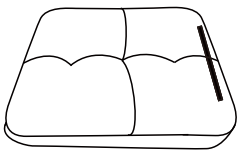 Right seat cushion*1	Q 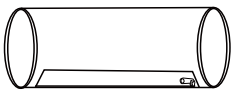 Left armrest pillow *1	R 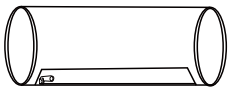 Right armrest pillow *1
G 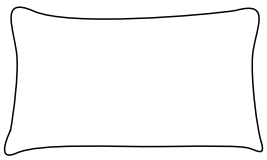 Waist pillow*2	H 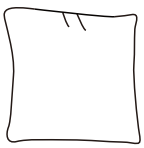 Pillow*2	I 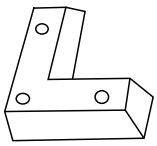 Leg*8	J 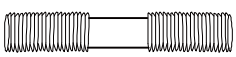 Bolt*8 M8*80mm
K 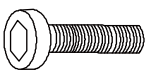 Bolt*24 M6*50mm	L  Washer*8	M 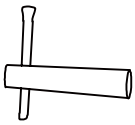 Allen key*1	N  Allen key*1

Note: Please retain all boxes until you are certain that your product isn't damaged and that you do not wish to return it. Disposal of boxes may prevent our ability to resolve your request.

STEP 1

1 Assemble the leg (I) to the left seat frame (A) with Bolts (K)

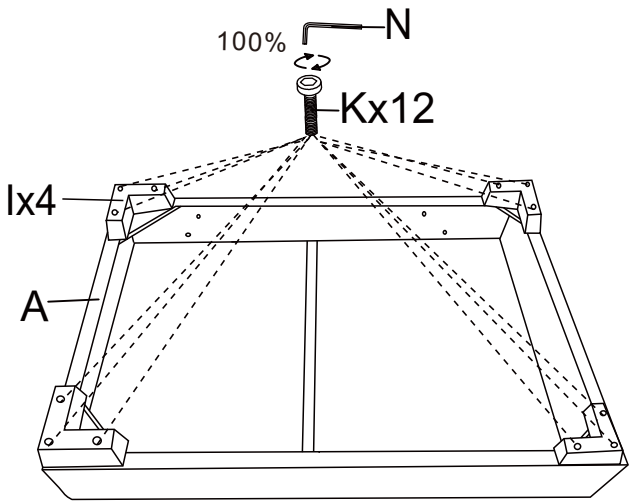

2 Assemble the leg (I) to the right seat frame (B) with Bolts (K)

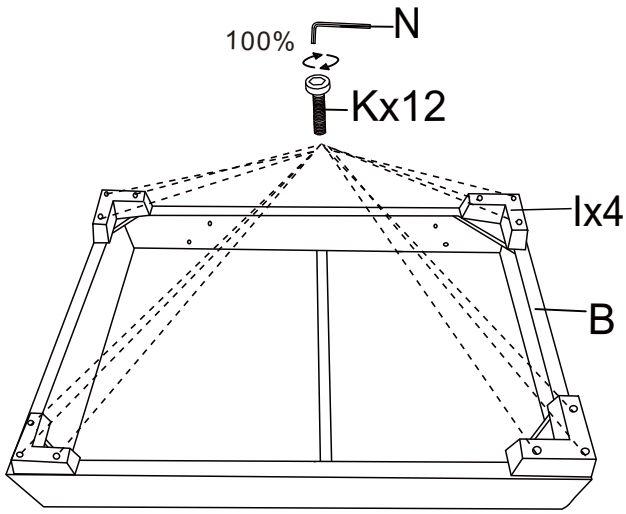

3 Assemble the backrest (C) with Bolts (J)

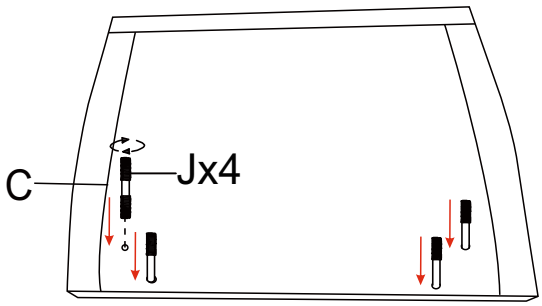

Backrest 1

4 Assemble the backrest (C) with Bolts (J)

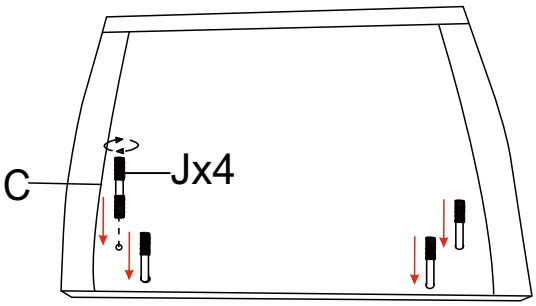

Backrest 2

5 Assemble the backrest (C)to the left seat frame(A) with washer (L)

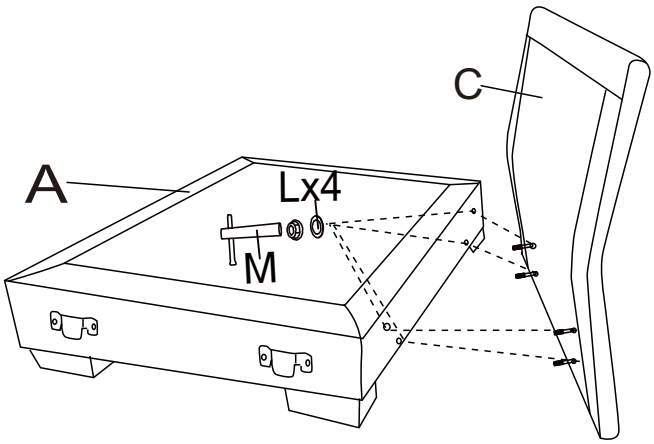

6 Assemble the backrest (C)to the right seat frame (B) with washer (L)

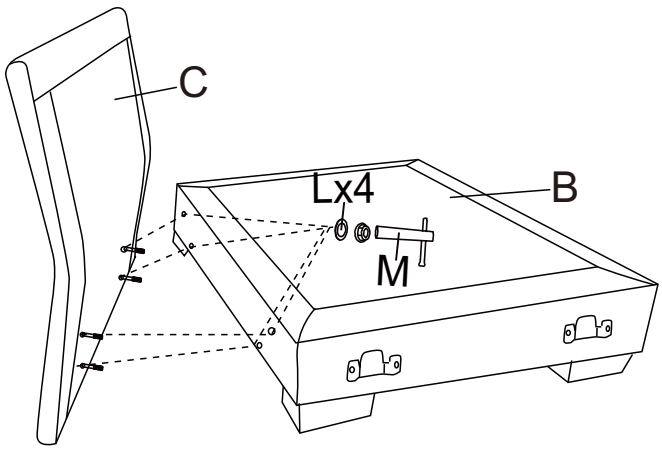

STEP 2

7 Attach the left armrest pillow(Q) to the left seat cushion(E)with a zipper

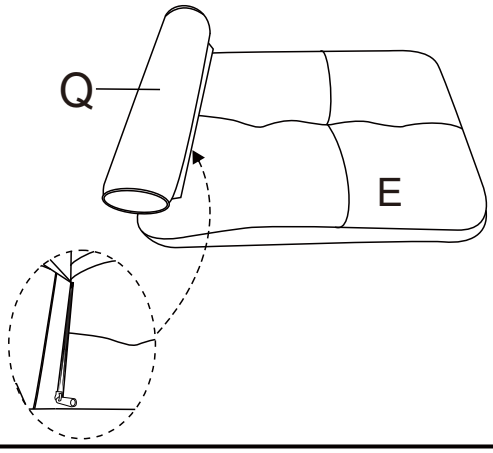

8 Attach the right armrest pillow(R) to the right seat cushion(F)with a zipper

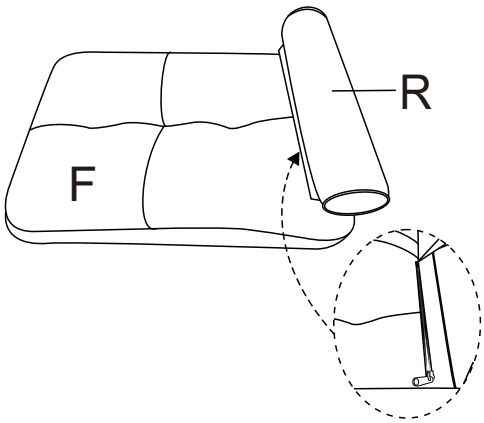

9 Insert the two mounts together

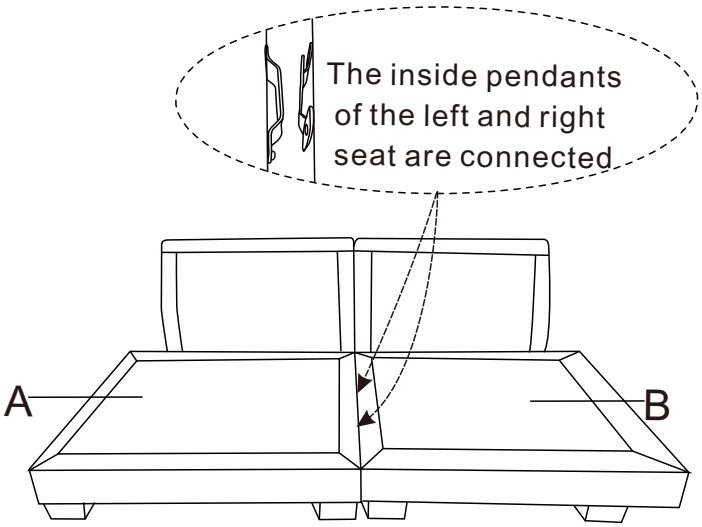

10 Put back cushion(D) and left seat cushion (E) and right seat cushion (F)to the sofa

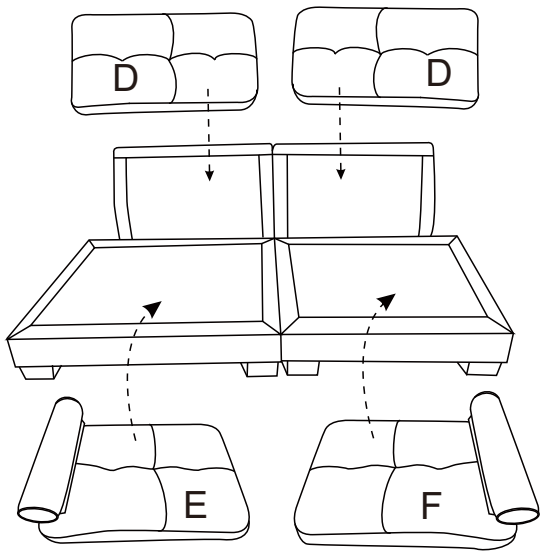

11 Put waist pillow(G) and pillow(H) to the sofa

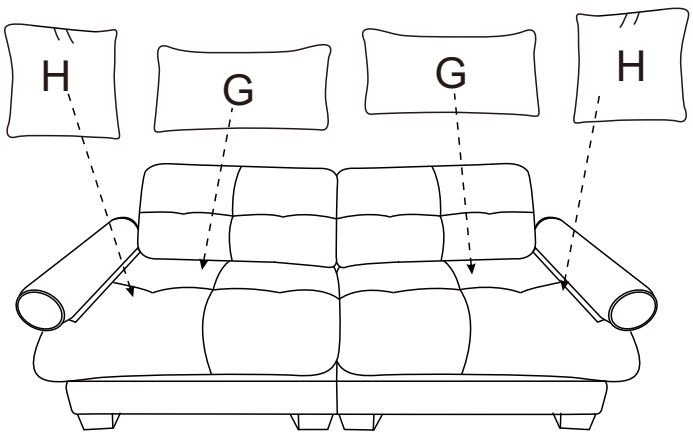

12 Completed .

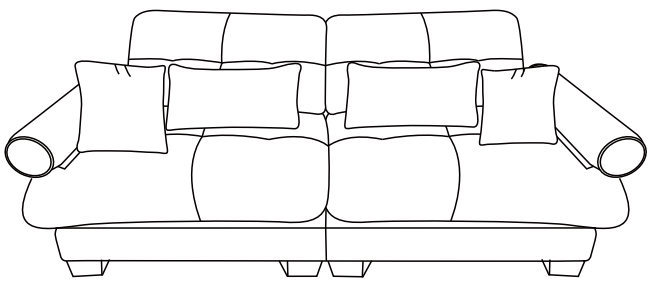

Assembly Instructions

IF YOU BUY 3 SEATER SOFA
please follow below assembly instruction

Parts List

A 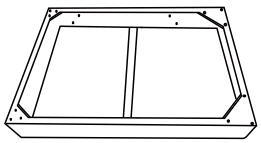 Left seat frame*1	B 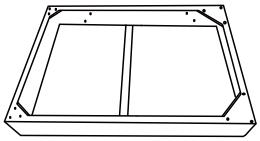 Right seat frame*1	O 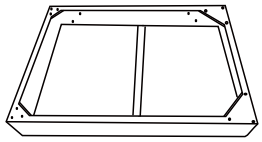 Seat frame*1	C 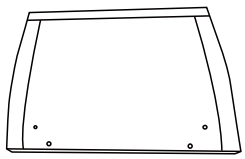 Backrest*3
D 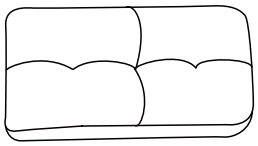 Back cushion*3	E 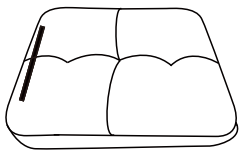 Left seat cushion*1	F 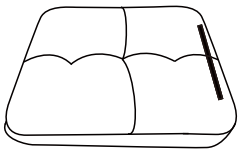 Right seat cushion*1	P 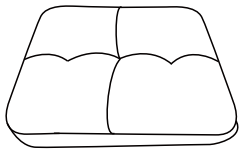 Seat cushion*1
Q 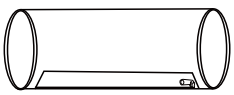 Left armrest pillow*1	R 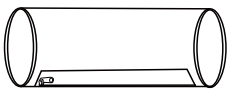 Right armrest pillow*1	G 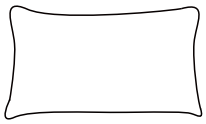 Waist pillow*3	H 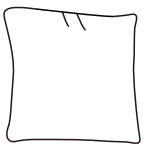 Pillow*2	I 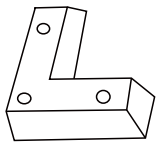 Leg*12
J 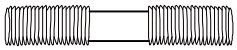 Bolt*12 M8*80mm	K 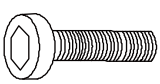 Bolt*36 M6*50mm	L  Washer*12	M 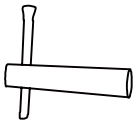 Allen key*3	N 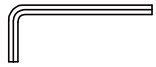 Allen key*3

Note: Please retain all boxes until you are certain that your product isn't damaged and that you do not wish to return it. Disposal of boxes may prevent our ability to resolve your request.

STEP 1

1 Assemble the leg (I) to the left seat frame (A) with Bolts (K)

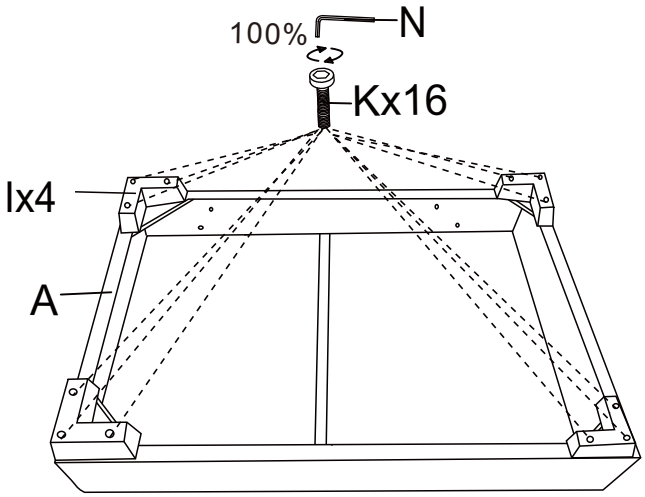

2 Assemble the leg (I) to the right seat frame (B) with Bolts (K)

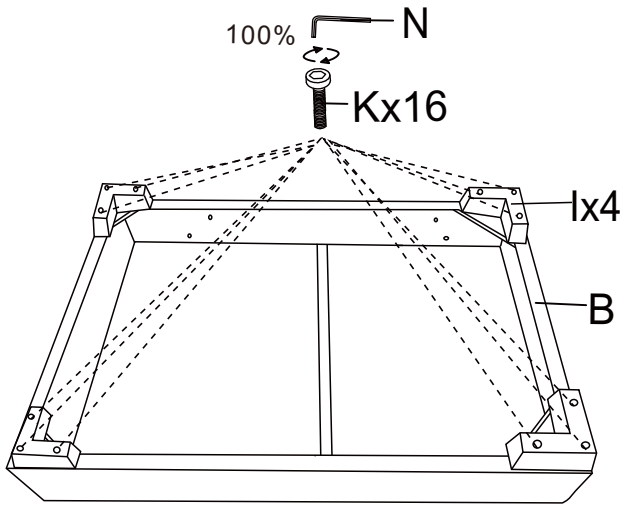

3 Assemble the leg (I) to the Seat frame (O) with Bolts (N)

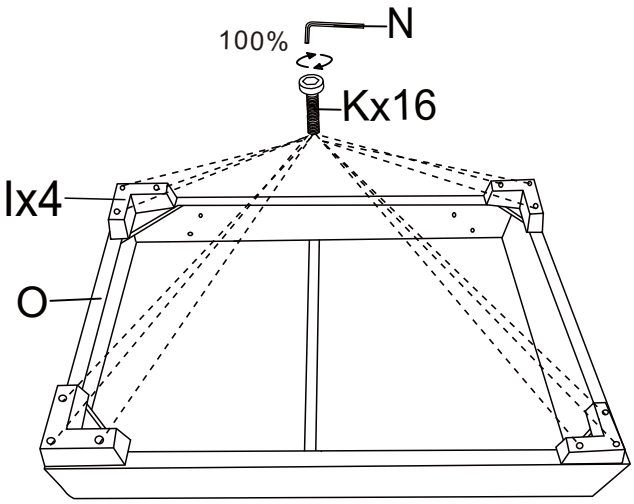

4 Assemble the backrest (C) with Bolts (J)

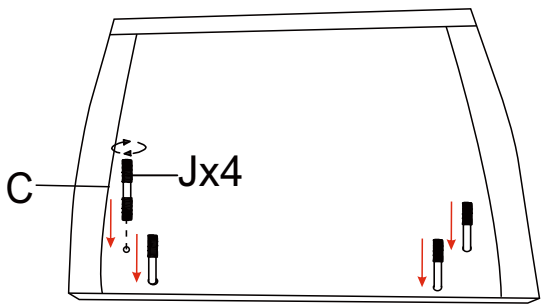

Backrest 1

5 Assemble the backrest (C) with Bolts (J)

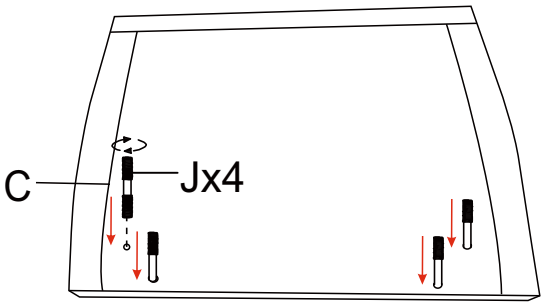

Backrest 2

6 Assemble the backrest (C) with Bolts (J)

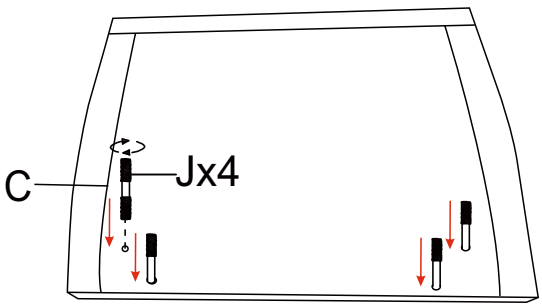

Backrest 3

STEP 2

⑦ Assemble the backrest (C)to the left seat frame(A) with washer (L)

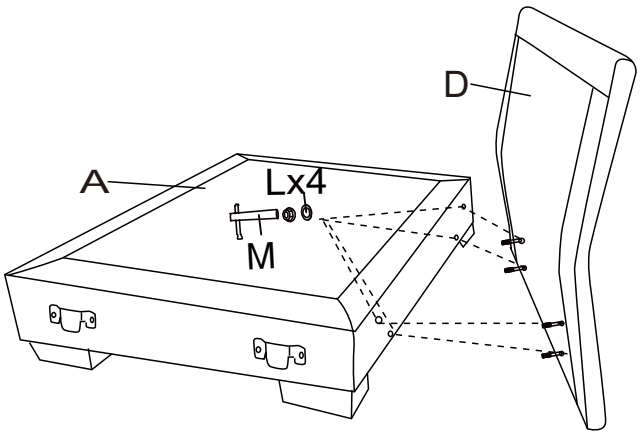

⑧ Assemble the backrest (C)to the right seat frame(B) with washer (L)

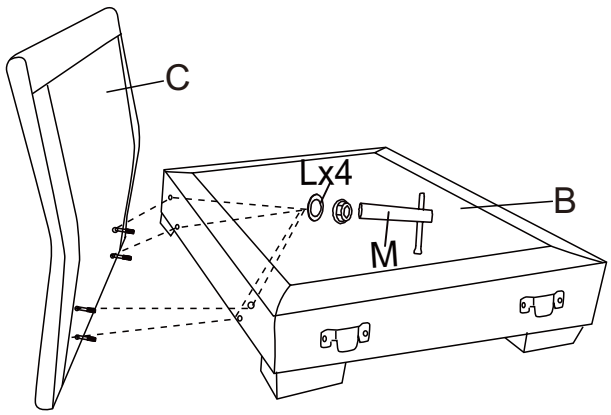

⑨ Assemble the backrest (C)to the Seat frame(O) with washer (L)

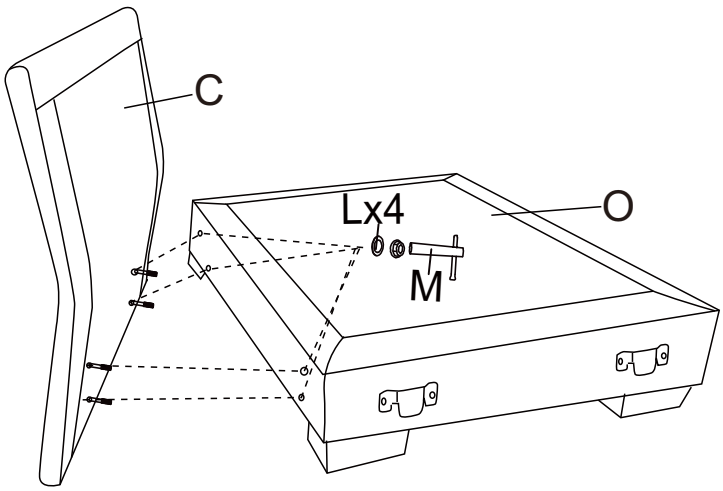

⑩ Attach the left armrest pillow(Q) to the left seat cushion(E)with a zipper

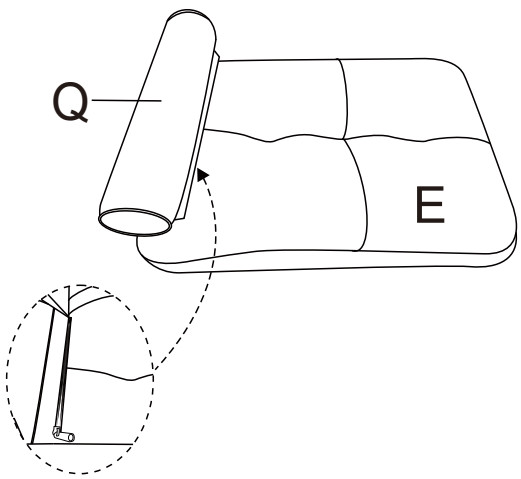

⑪ Attach the right armrest pillow(R) to the right seat cushion(F)with a zipper

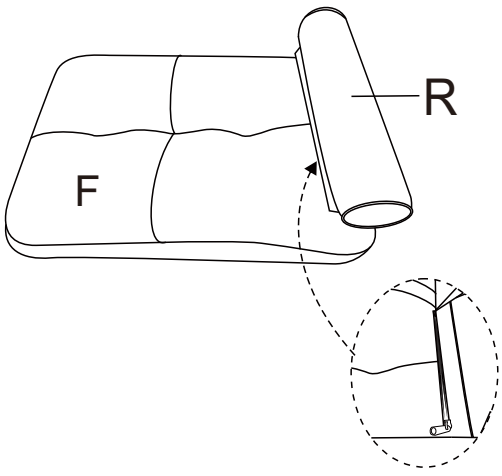

STEP 3

⑫ Insert the two mounts together

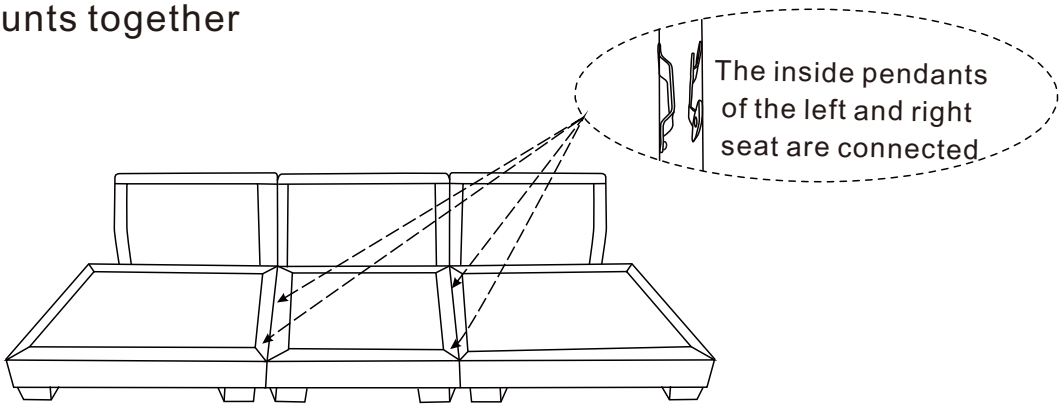

⑬ Put back cushion(D) and
left seat cushion (E) and
seat cushion(P)and
right seat cushion(F)to the sofa

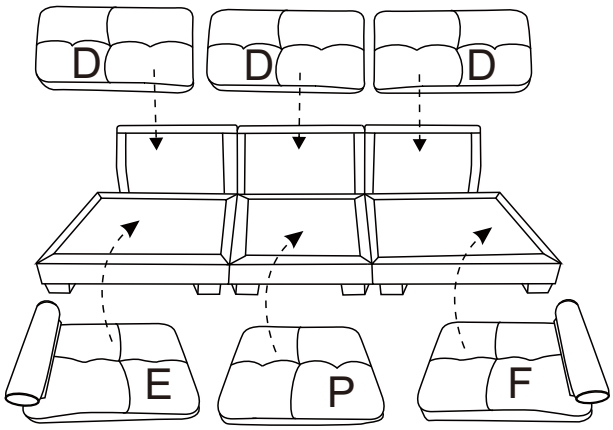

⑭ Put waist pillow(G) and pillow(H)
to the sofa

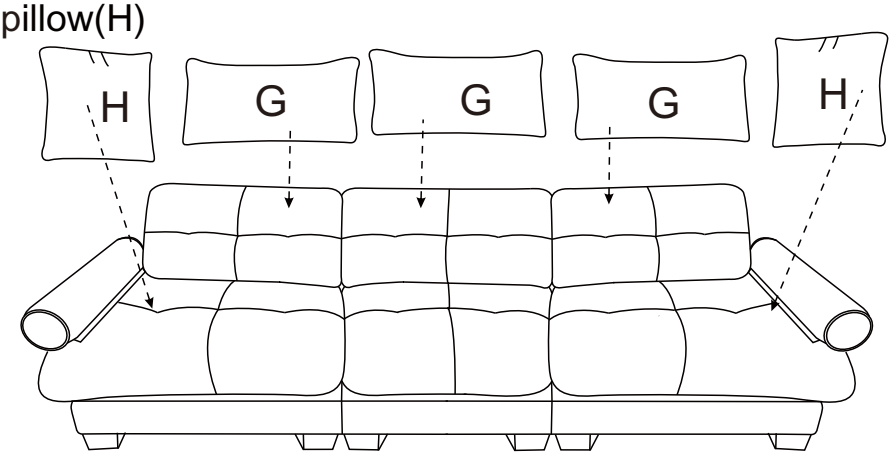

⑮ Completed .

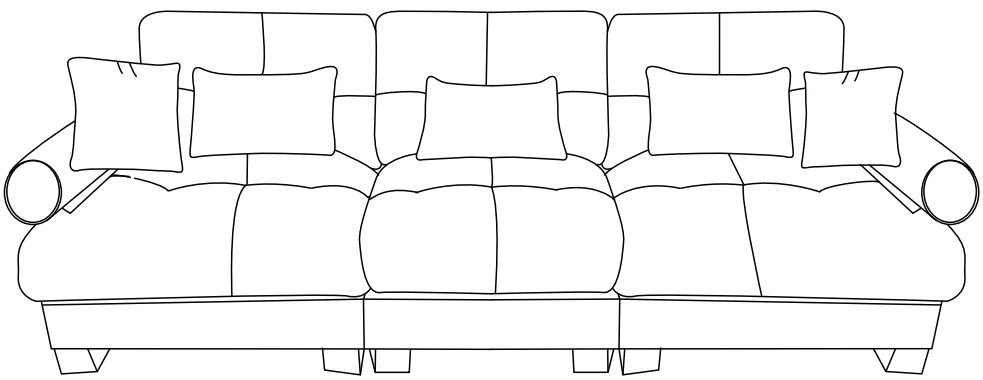

Assembly Instructions

IF YOU BUY 4 SEATER SOFA
please follow below assembly instruction

Parts List

A 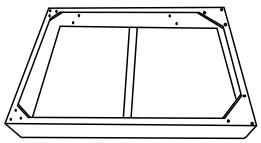 Left seat frame*1	B 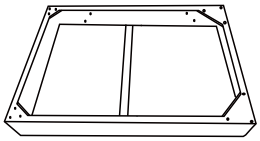 Right seat frame*1	O 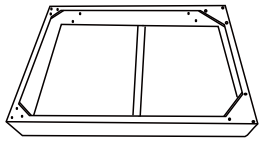 Seat frame*2	C 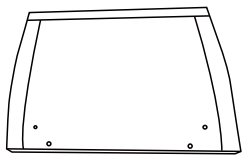 Backrest*4
D 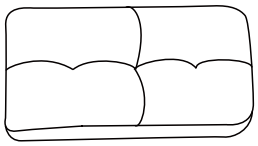 Back cushion*4	E 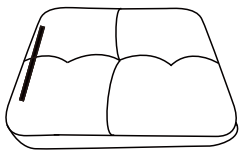 Left seat cushion*1	F 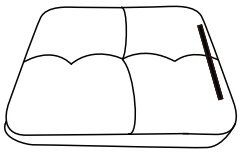 Right seat cushion*1	P 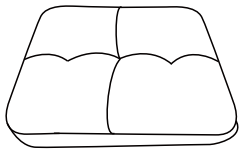 Seat cushion*2
Q 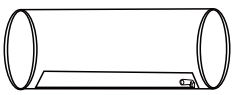 Left armrest pillow*1	R 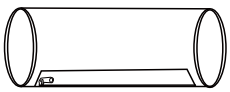 Right armrest pillow*1	G 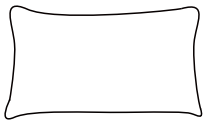 Waist pillow*4	H 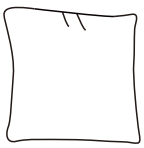 Pillow*2	I 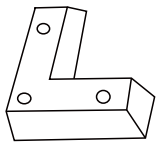 Leg*16
J 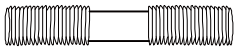 Bolt*16 M8*80mm	K 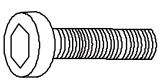 Bolt*48 M6*50mm	L  Washer*16	M 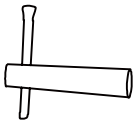 Allen key*4	N 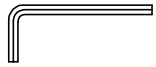 Allen key*4

Note: Please retain all boxes until you are certain that your product isn't damaged and that you do not wish to return it. Disposal of boxes may prevent our ability to resolve your request.

STEP 1

1 Assemble the leg (I) to the left seat frame (A) with Bolts (K)

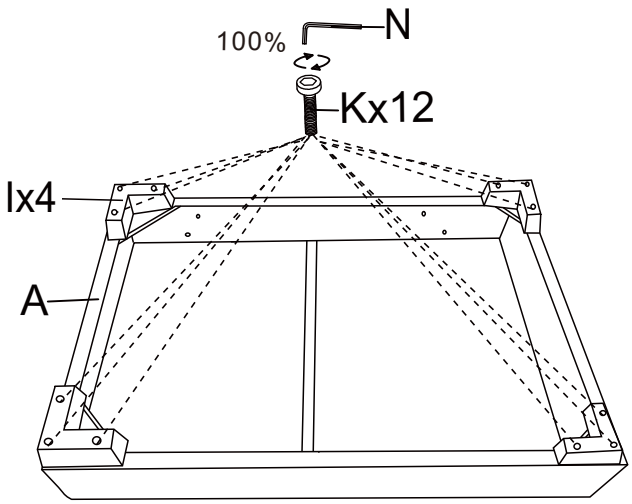

2 Assemble the leg (I) to the right seat frame (B) with Bolts (K)

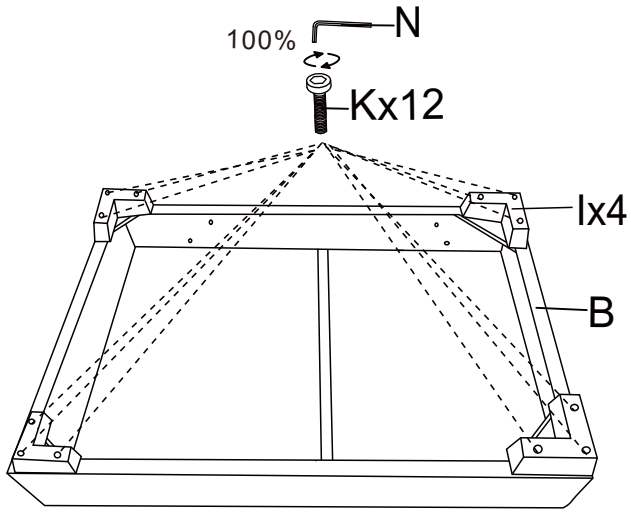

3 Assemble the leg (I) to the seat frame (O) with Bolts (K)

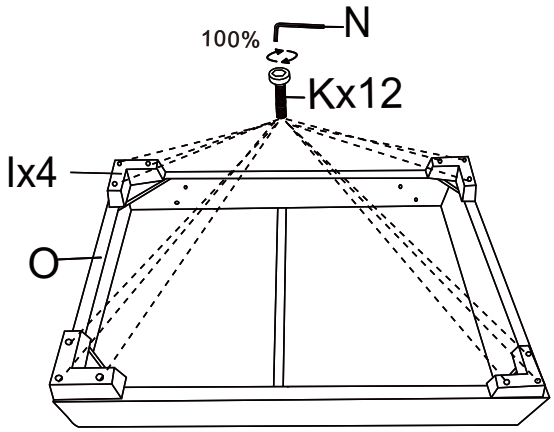

Seat frame 1

4 Assemble the leg (I) to the seat frame (O) with Bolts (K)

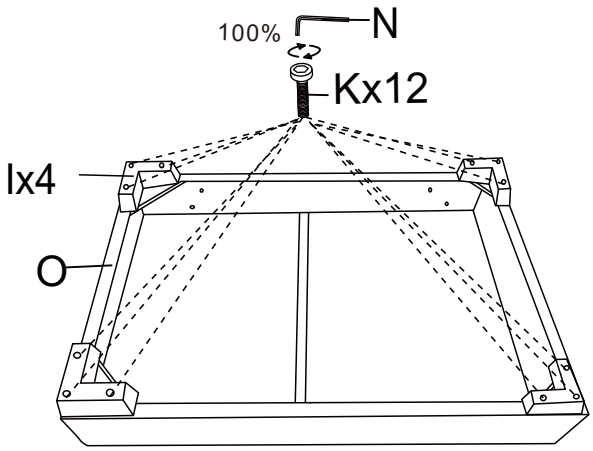

Seat frame 2

5 Assemble the backrest (C) with Bolts (J)

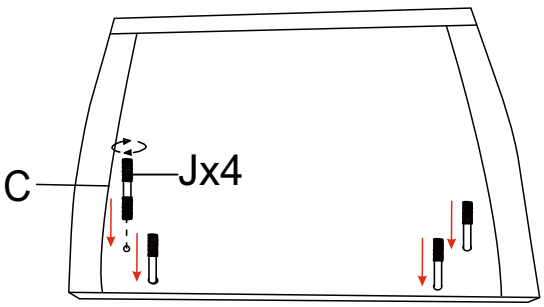

Backrest 1

6 Assemble the backrest (C) with Bolts (J)

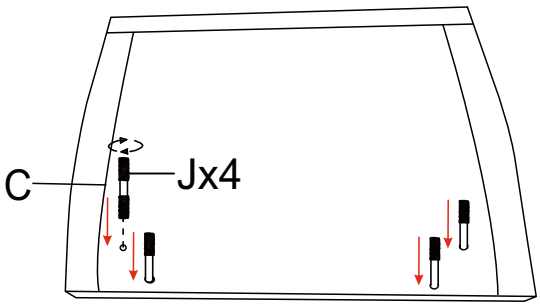

Backrest 2

STEP 2

⑦ Assemble the backrest (C) with Bolts (J)

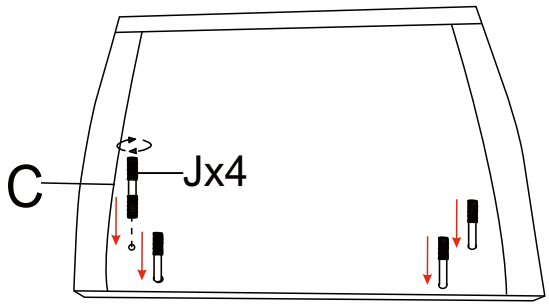

Backrest 3

⑧ Assemble the backrest (C) with Bolts (J)

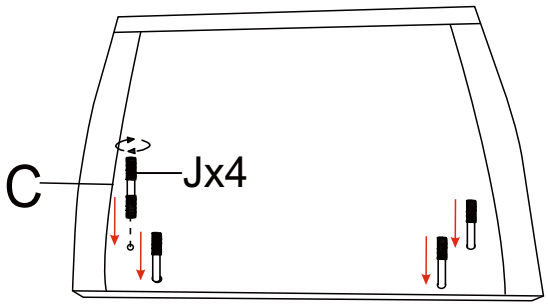

Backrest 4

⑨ Assemble the backrest (C) to the left seat frame(A) with washer (L)

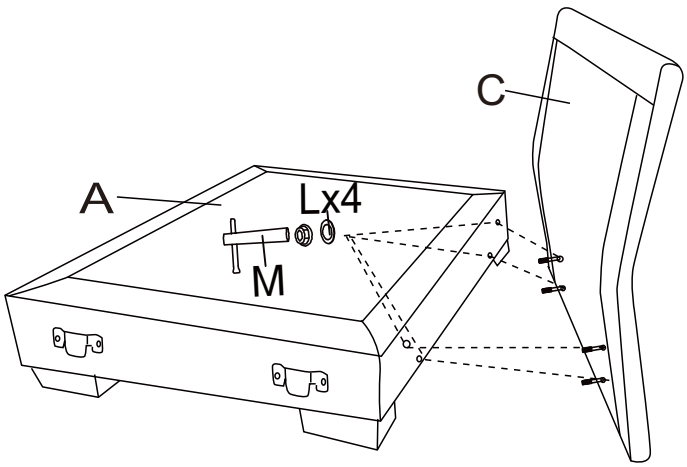

⑩ Assemble the backrest (C) to the right seat frame(B) with washer (L)

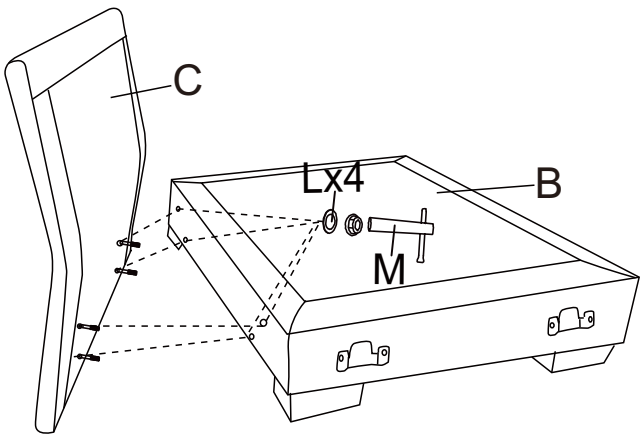

⑪ Assemble the backrest (C)to the Seat frame(O) with washer (L)

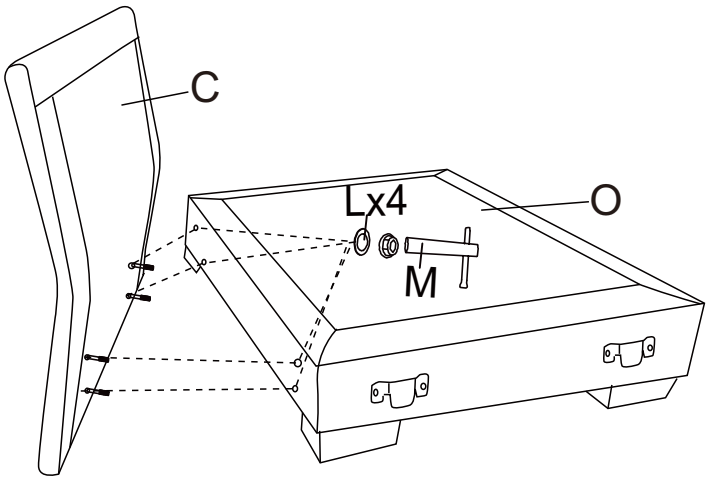

⑫ Assemble the backrest (C)to the Seat frame(O) with washer (L)

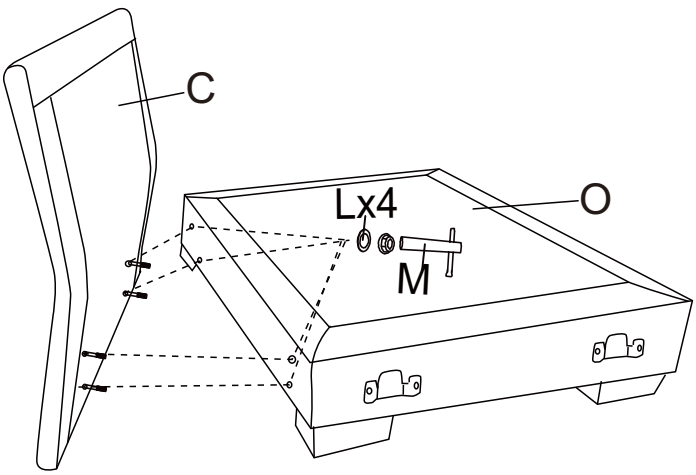

STEP 3

⑬ Attach the left armrest pillow(Q) to the left seat cushion(E)with a zipper

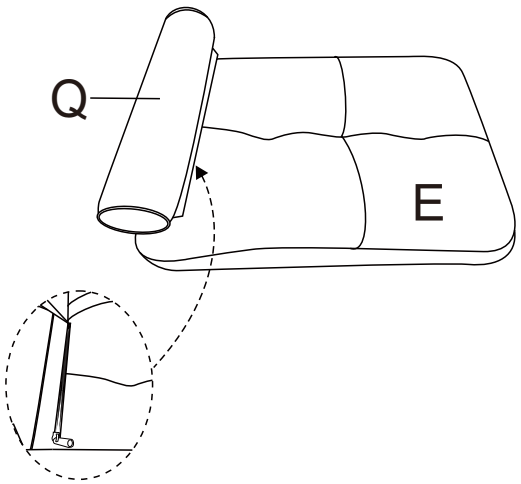

⑭ Attach the right armrest pillow(R) to the right seat cushion(F)with a zipper

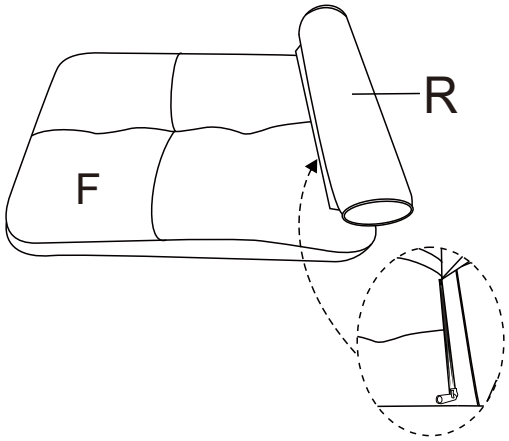

⑮ Insert the two mounts together

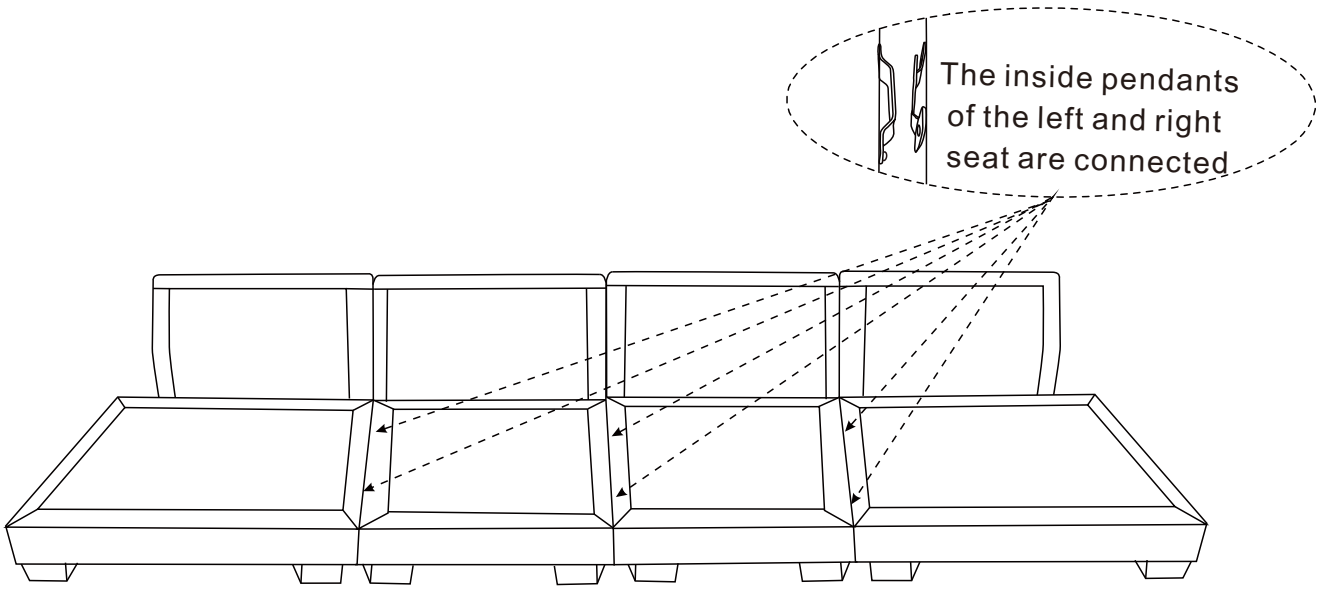

STEP 4

⑯ Put back cushion(D) and left seat cushion (E) and seat cushion(P)and right seat cushion(F)to the sofa

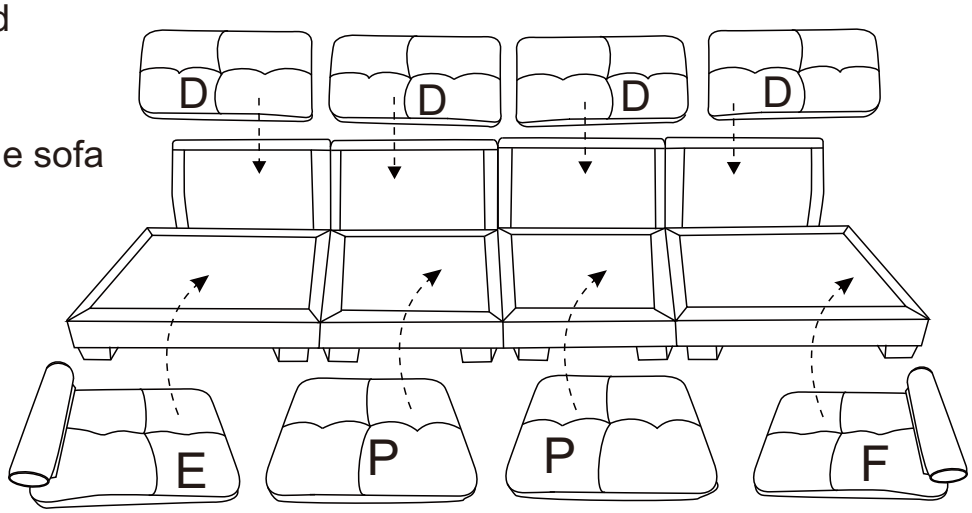

⑰ Put waist pillow(G) and pillow(H) to the sofa

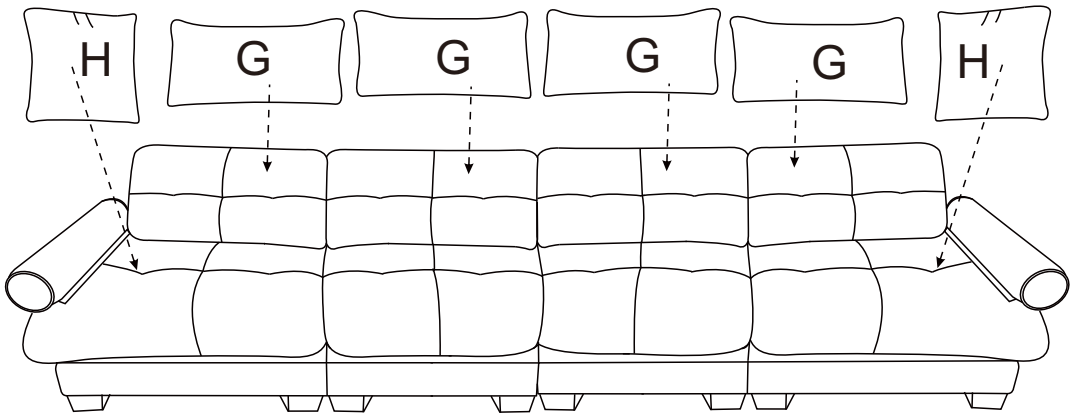

⑱ Completed .

