Assembly Instruction and Care Advice

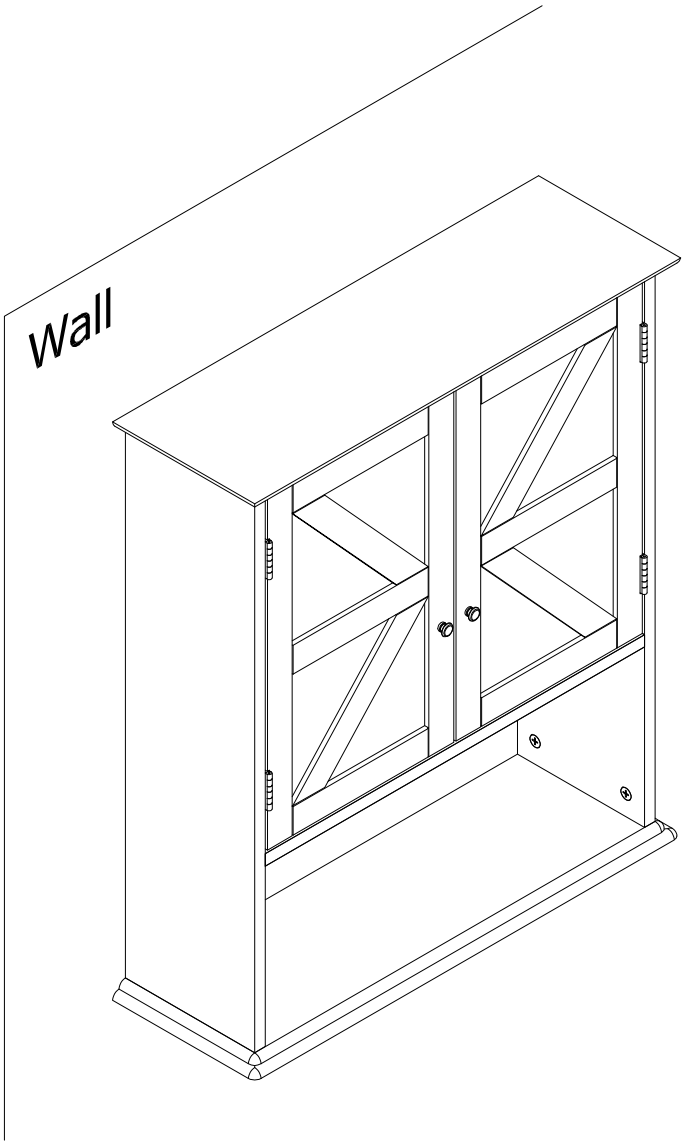

Bathroom Wall Cabinet with 2 Barn Doors and shelf

Thank you for purchasing this product!

Before You Start

- Please read all instructions carefully.
- Retain instructions for future reference.
- Separate and count all parts and hardware.
- Read through each step carefully and follow the proper order.
- We recommend that, where possible, all items are assembled near to the area in which they will be placed in use, to avoid moving the product unnecessarily once assembled.
- Always place the product on a flat, steady and stable surface.
- Keep all small parts and packaging materials for this product away from babies and children as they potentially pose a serious choking hazard.

Cam Lock Assembly Instructions

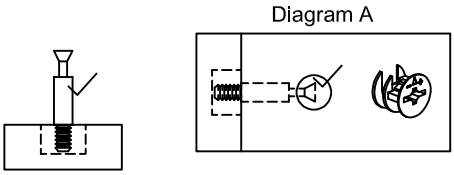

Insert Cam Bolt into hole as shown in diagram A.

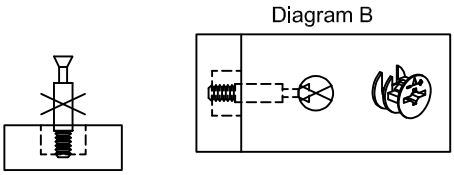

Make sure not to insert the Cam Bolt:
Too deep as shown in figure B as this will cause the Cam Lock to be misaligned and unable to interlock properly.

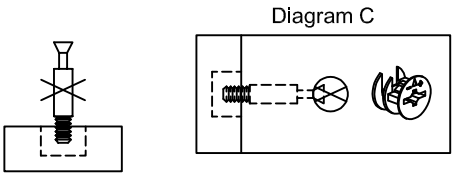

Also avoid inserting the Cam Bolt too close to the surface of the hole as shown in figure C, as this will cause the Cam Lock to be too loose, and not interlock properly.

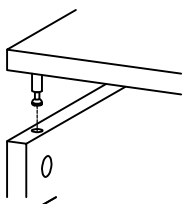

Connect the panels together.

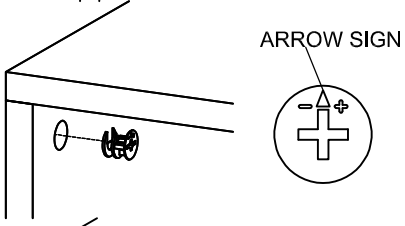

Insert the Cam Lock so the side opening fits over the head of the Cam Bolt.

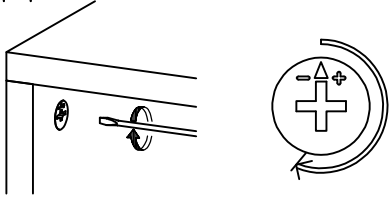

To tighten the Cam Lock, turn it clockwise on half a turn with a flat screwdriver.
**Do not use an automatic screwdriver as it may bend or break if too much power is imposed.*

Part list

1 x1 

2 x1 

3 x1 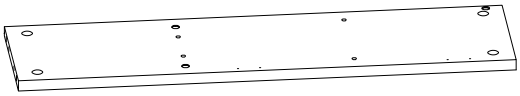

4 x1 

5 x1 

6 x1 

7 x1 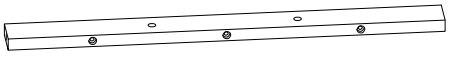

8 x1 

9 x1 

10 x1 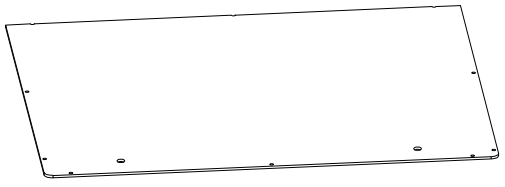

11 x1 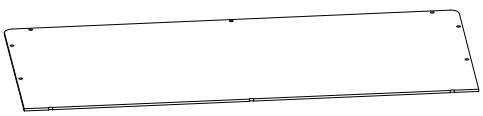

Hardware List

A x12 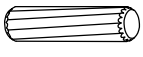

Ø6*20mm

B x2 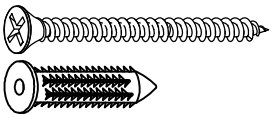

Ø5*50mm

C x3 

Ø4*50mm

D x28 

Ø3.5*12mm

E x17 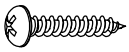

Ø3.5*12mm

F x3 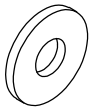

Ø13*Ø6*1mm

G x14 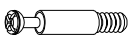

Ø6*34mm

H x14 

Ø14.5*9.5mm

I x4 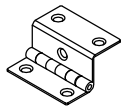

43*20*20*15*1mm

J x4 

K x1 

60*22*4mm

L x2 

Ø25mm

M x2 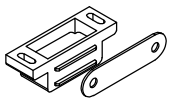

ASSEMBLY TOOLS REQUIRED (NOT INCLUDED)

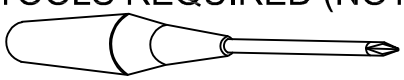

Step 1

A	Ø6*20mm	2pcs
G	Ø6*34mm	3pcs

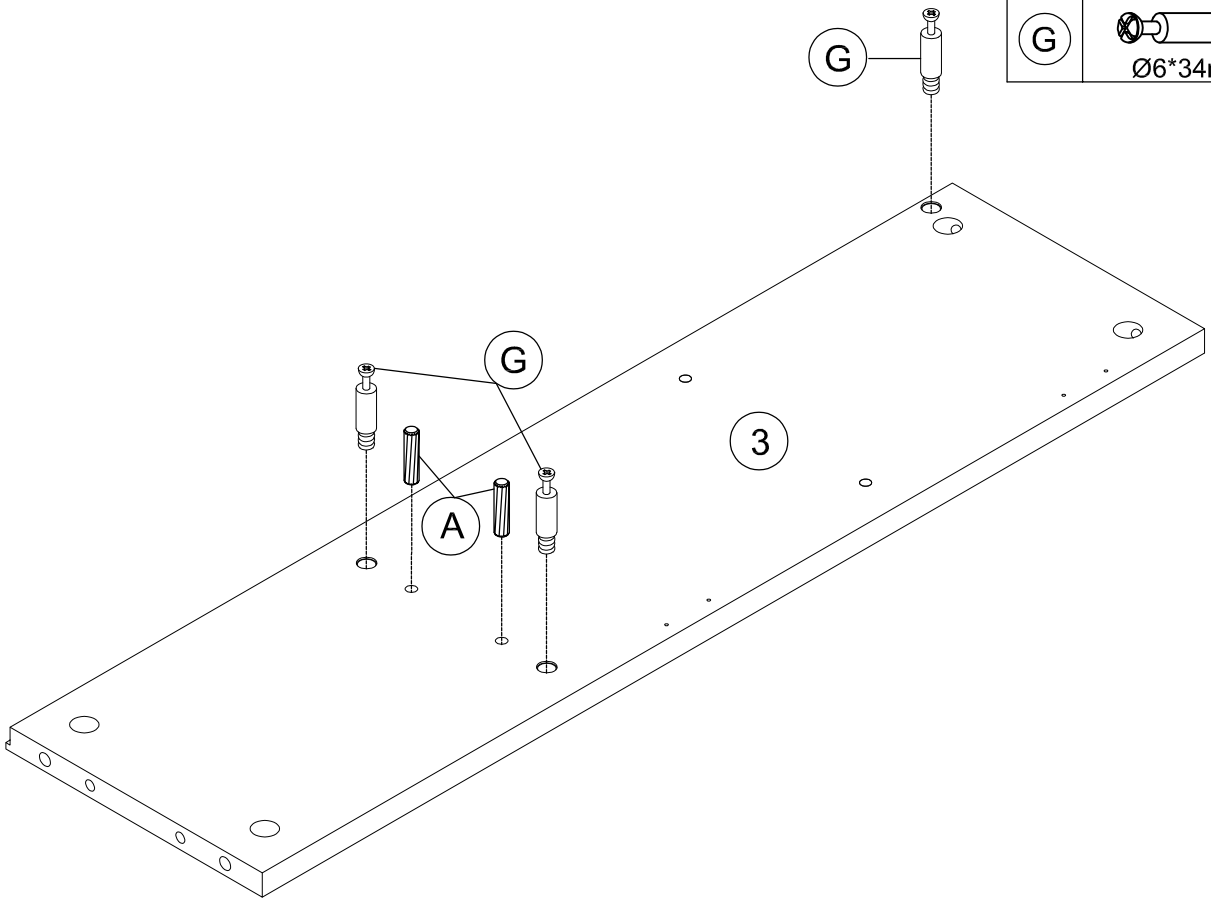

Step 2

A	Ø6*20mm	2pcs
G	Ø6*34mm	3pcs

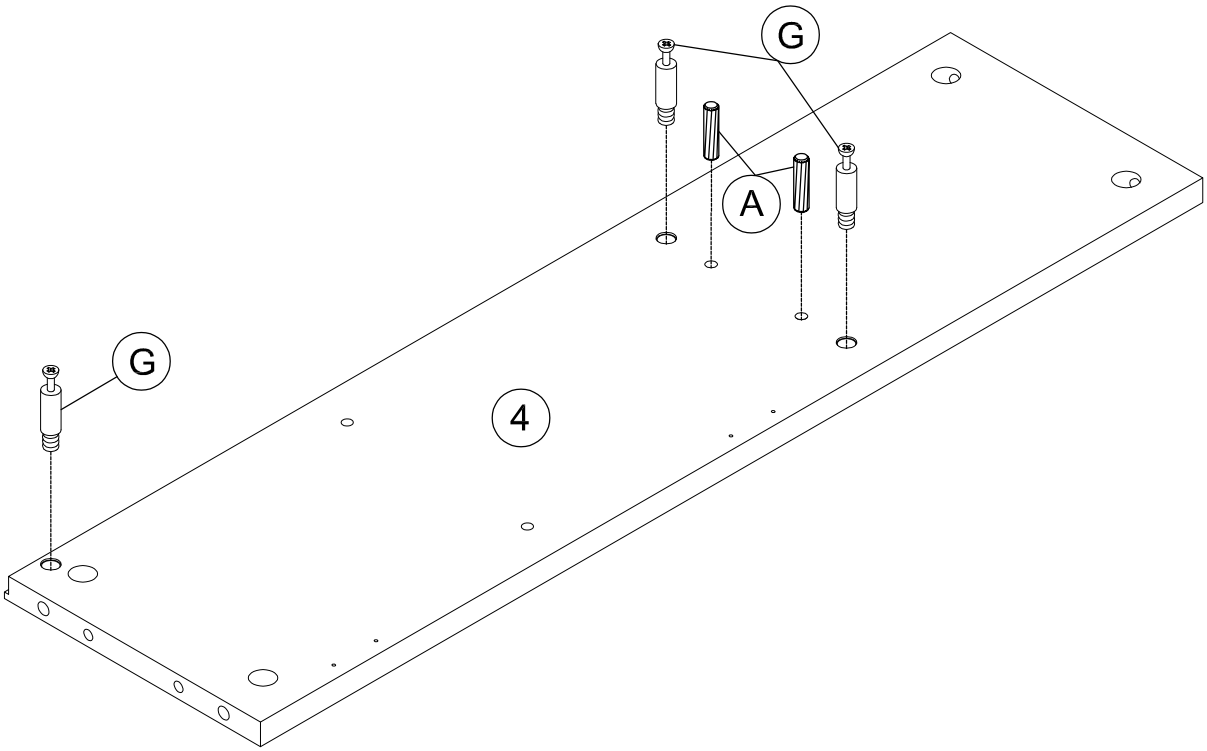

Step 3

H	 Ø14.5*9.5mm	6pcs

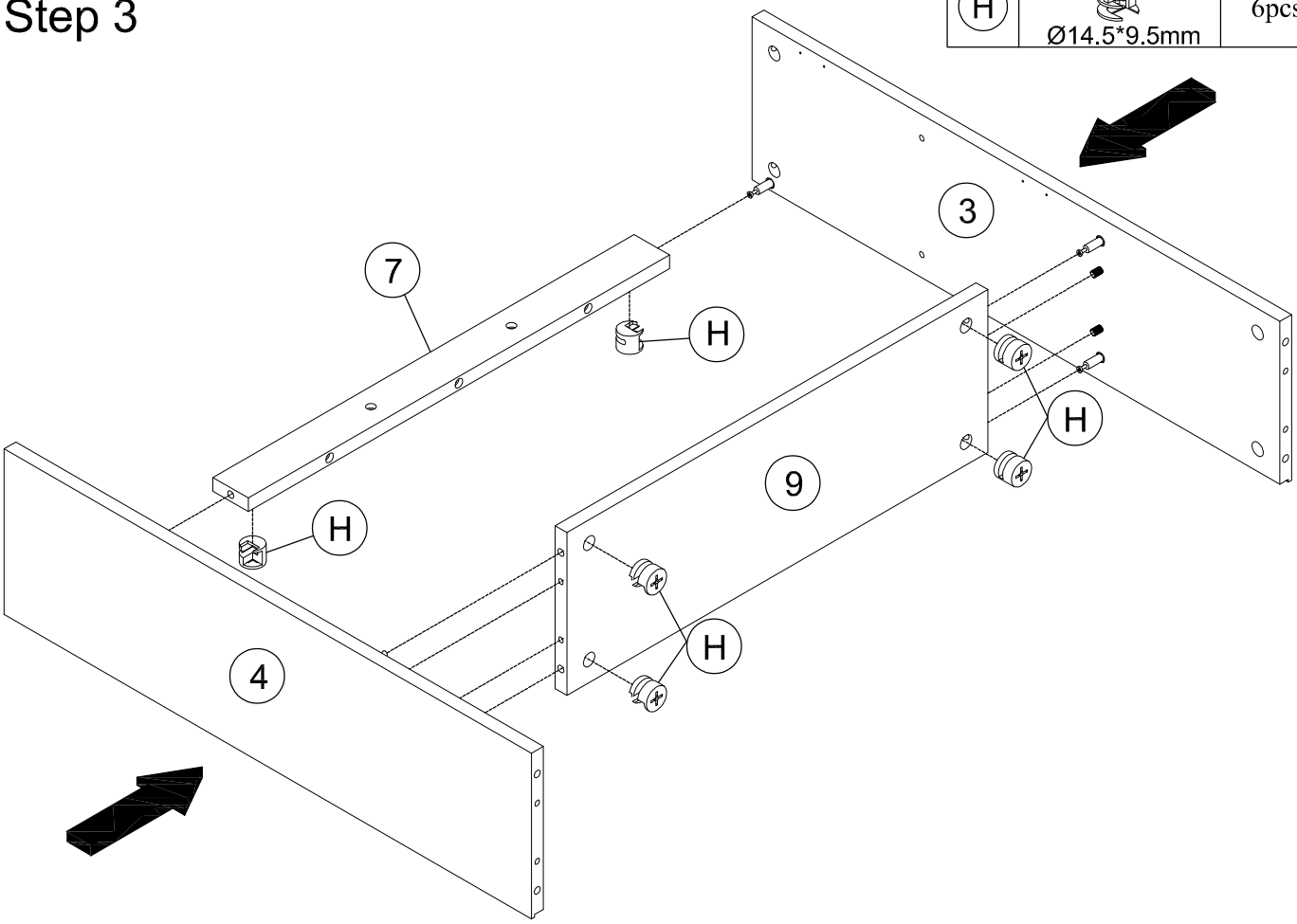

Step 4

A	 Ø6*20mm	4pcs
G	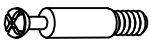 Ø6*34mm	4pcs

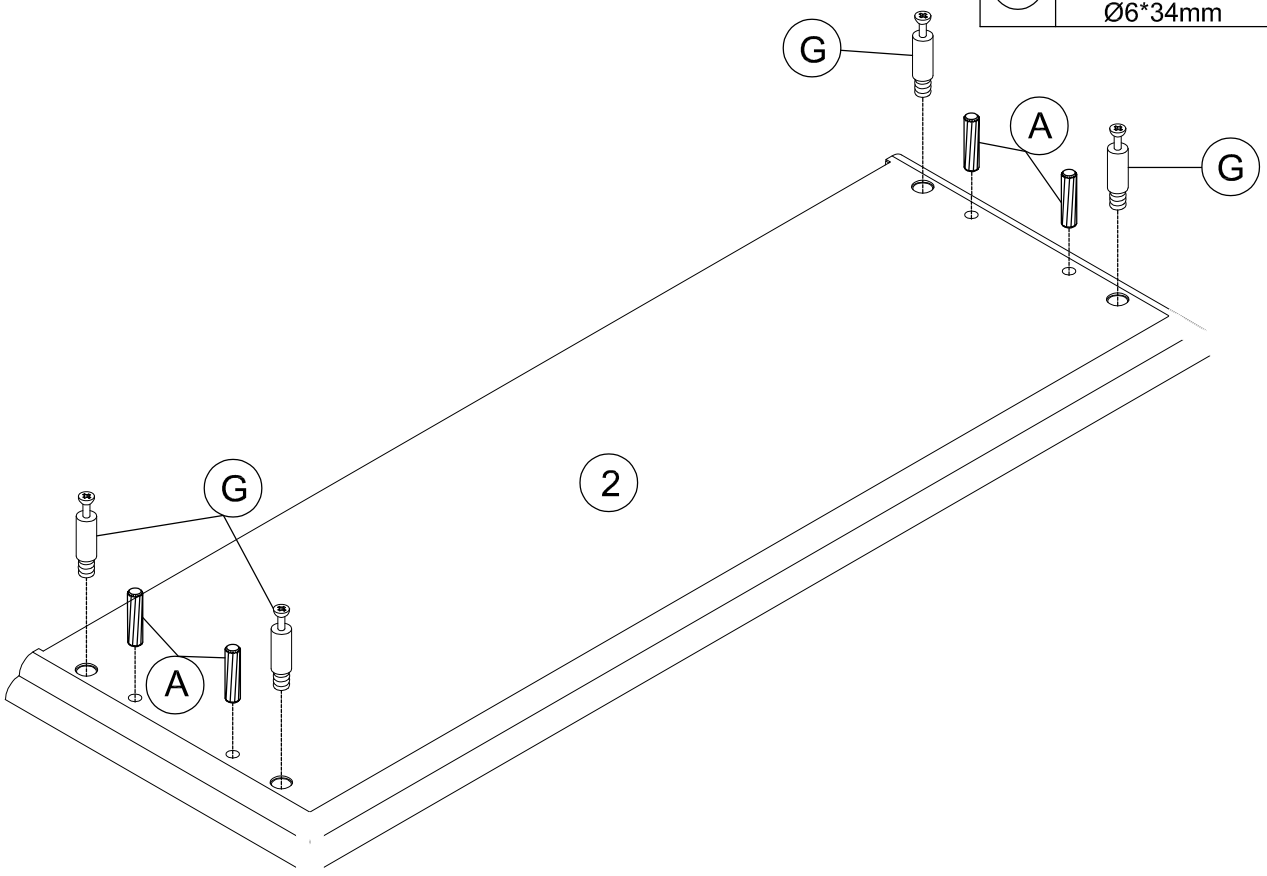

Step 5

H	 Ø14.5*9.5mm	4pcs

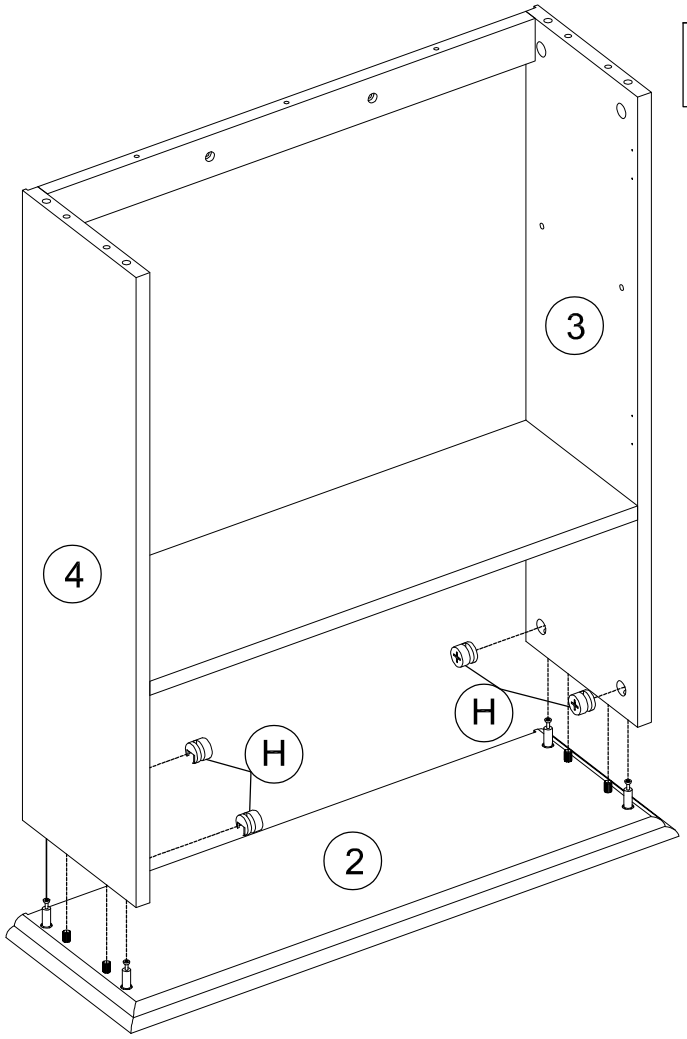

Step 6

G	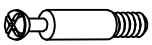 Ø6*34mm	4pcs
D	 #3.5*12mm	4pcs
M	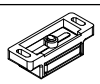	2pcs

Step 7

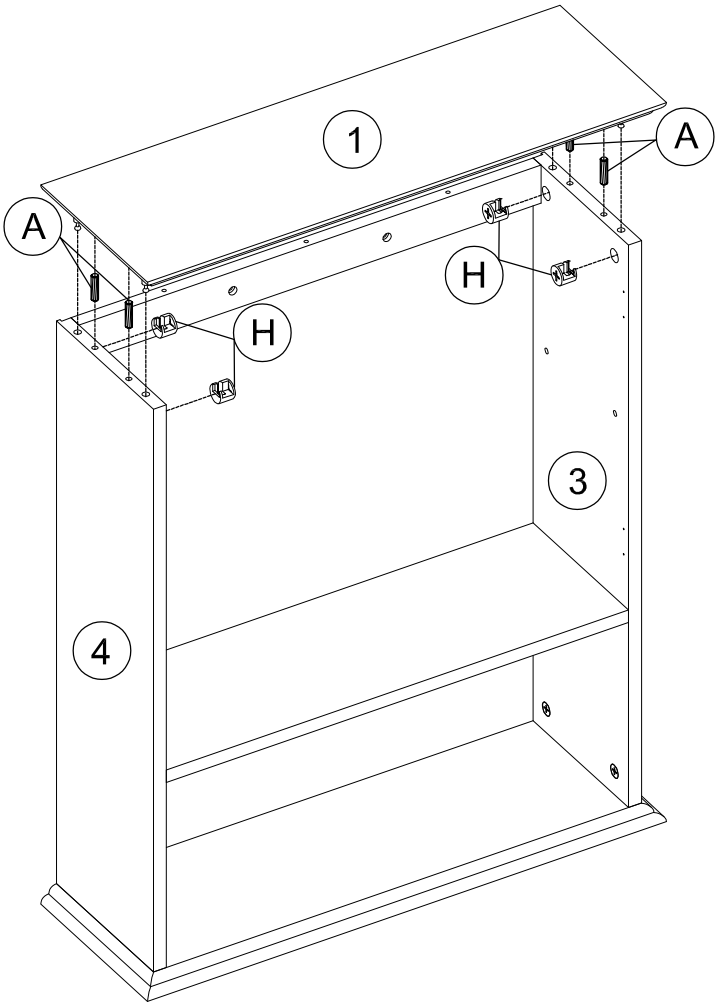

A	Ø6*20mm	4pcs
H	Ø14.5*9.5mm	4pcs

Step 8

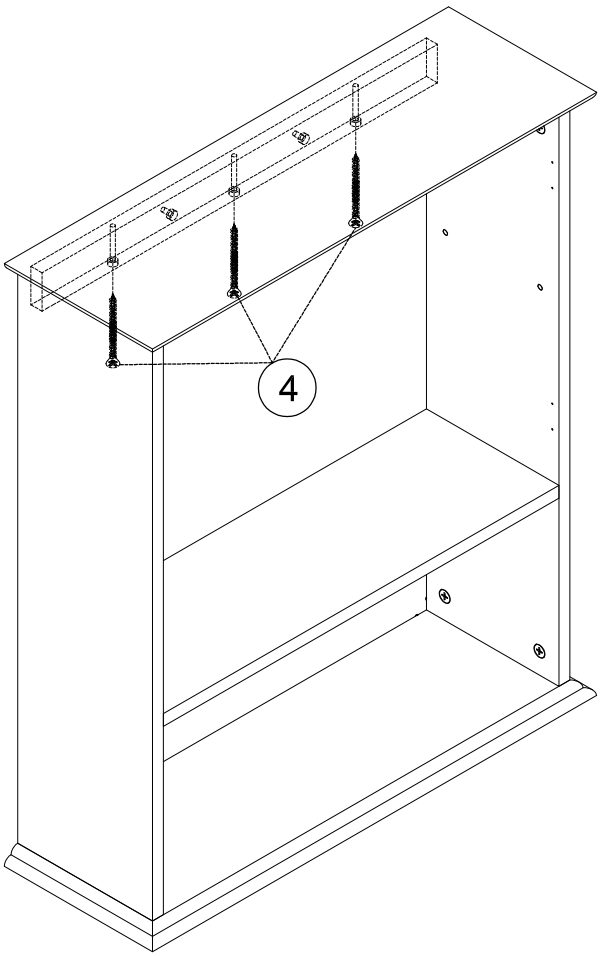

C	#4*50mm	3pcs

Step 9

E	#3.5*12mm	17pcs
F	Ø13*Ø6*1mm	3pcs

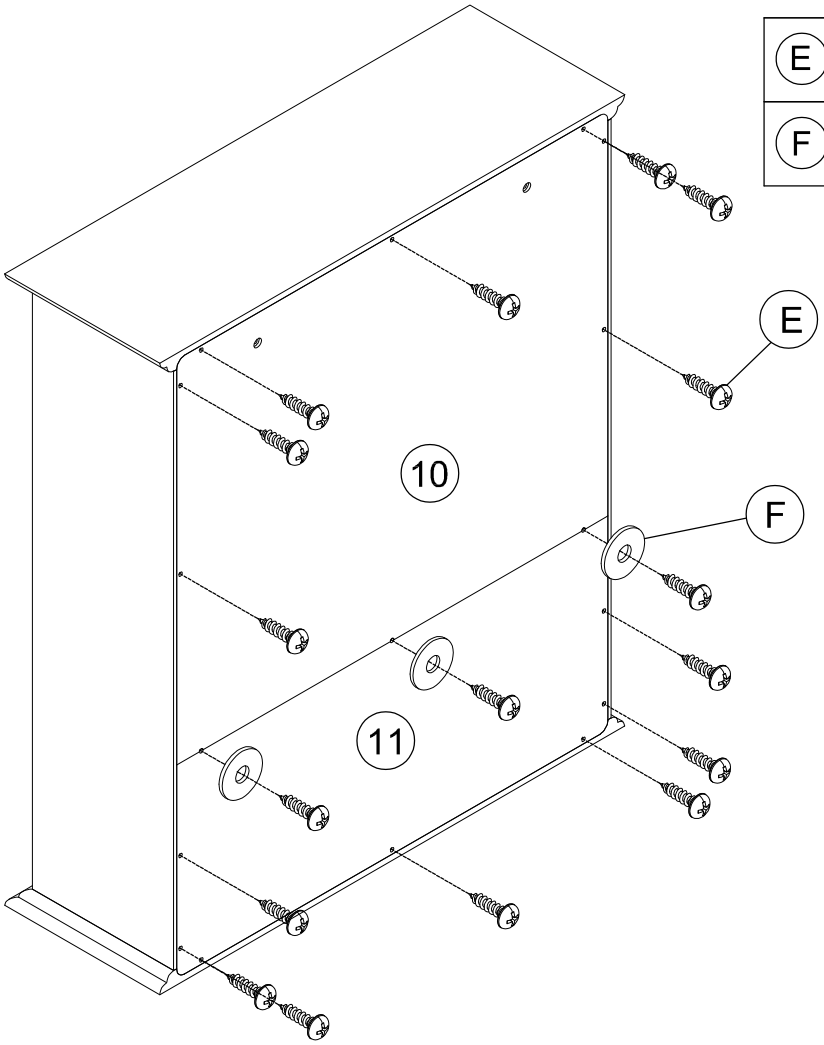

Step 10

D	#3.5*12mm	8pcs
I		2pcs
M		1pc

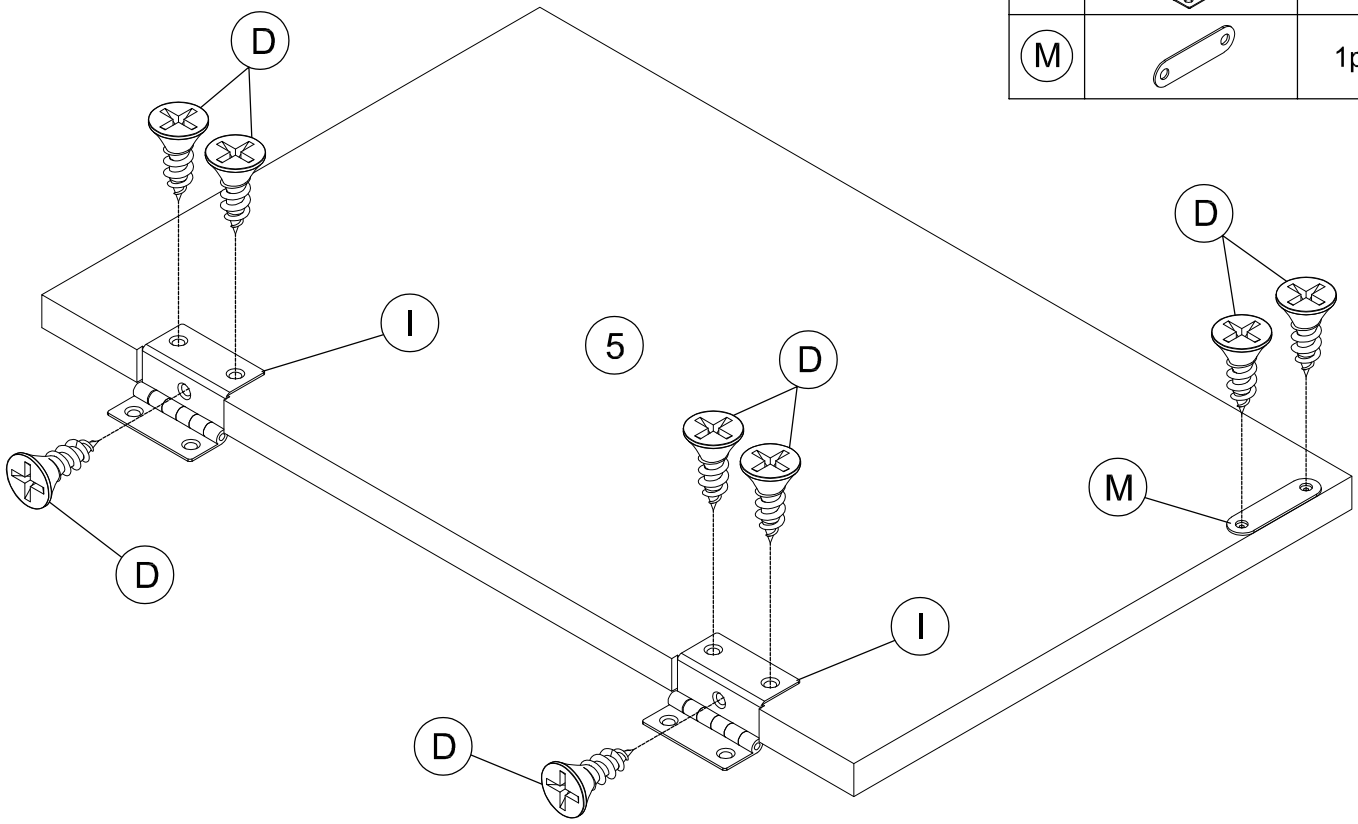

Step 11

D	 #3.5*12mm	8pcs
I		2pcs
M		1pc

Step 12

D	 #3.5*12mm	8pcs
L	 Ø25mm	2pcs

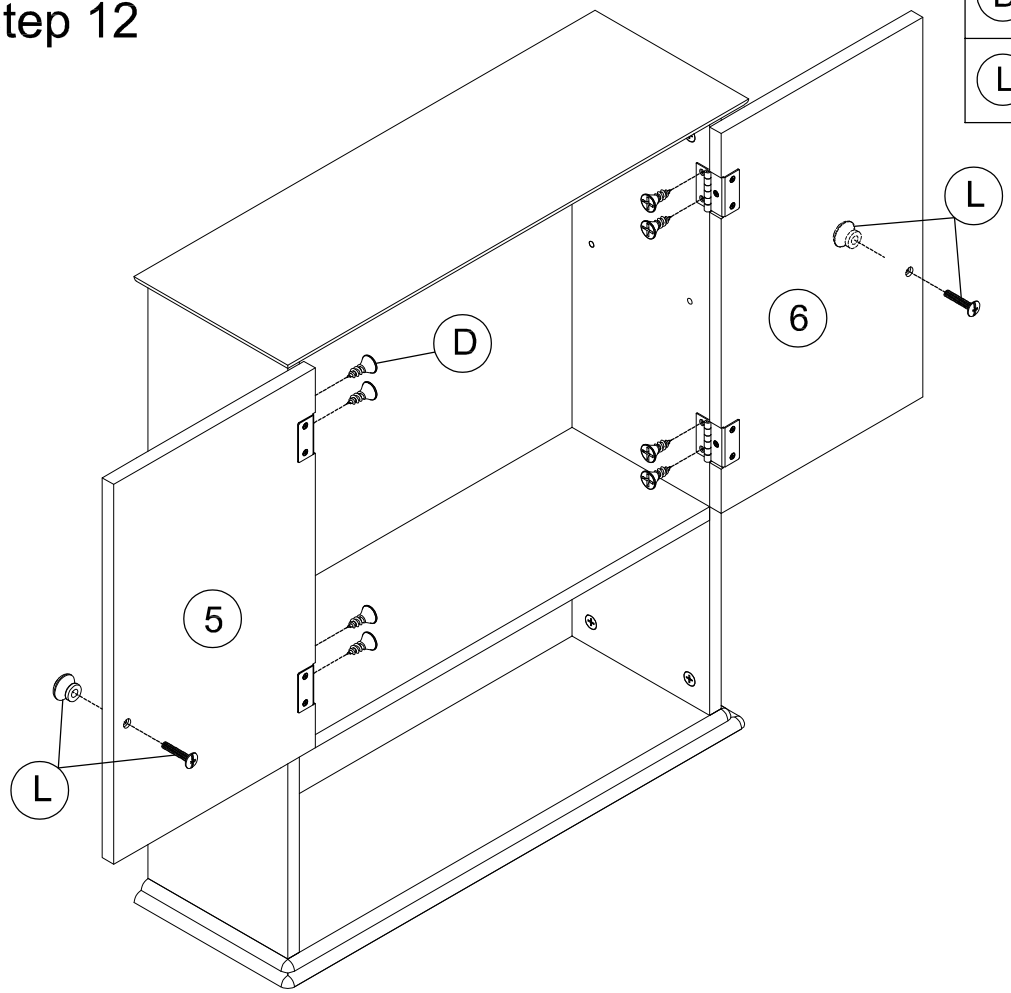

Step 13

B	Ø5*50mm	2pcs

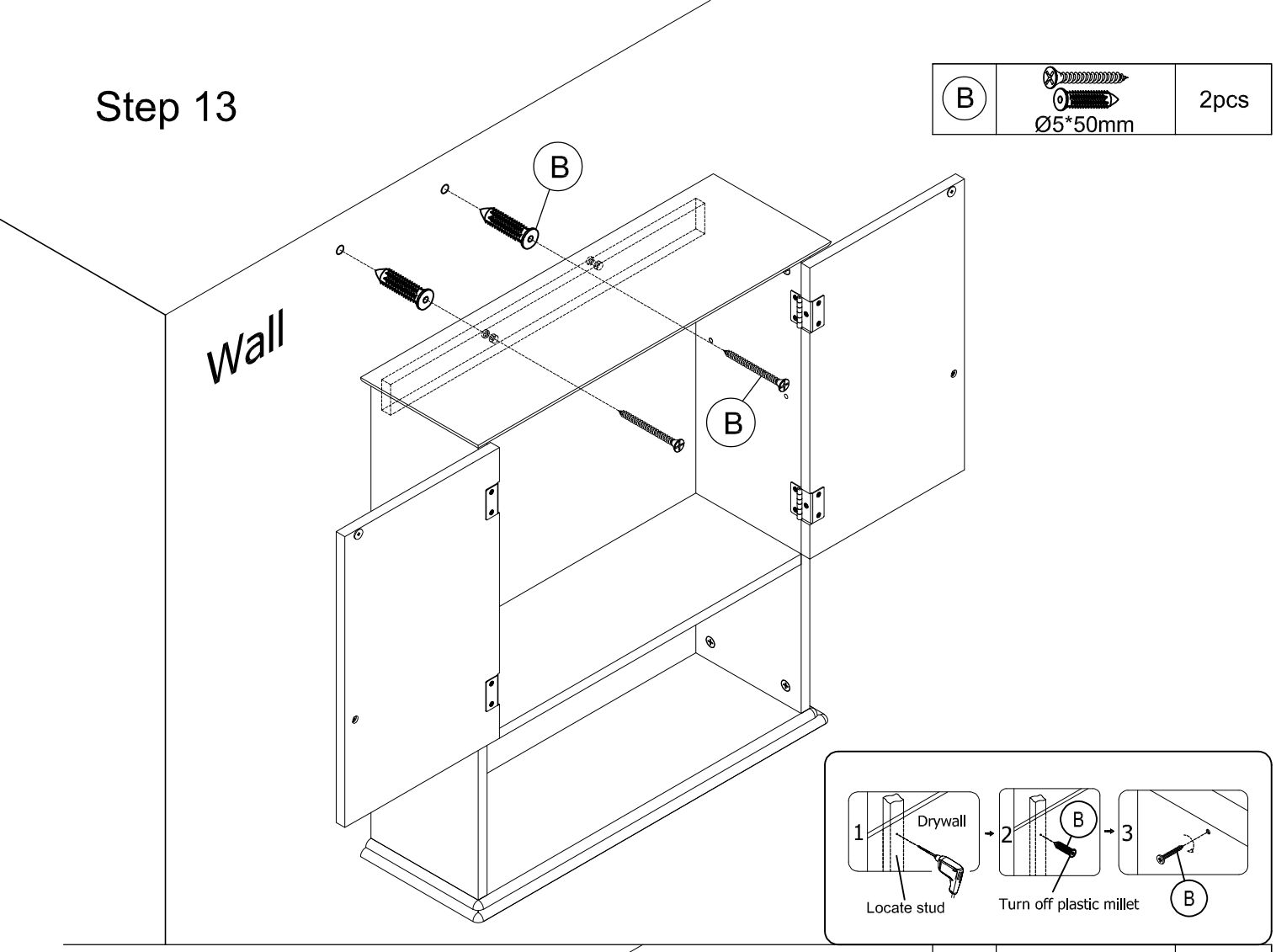

Step 14

J		4pcs

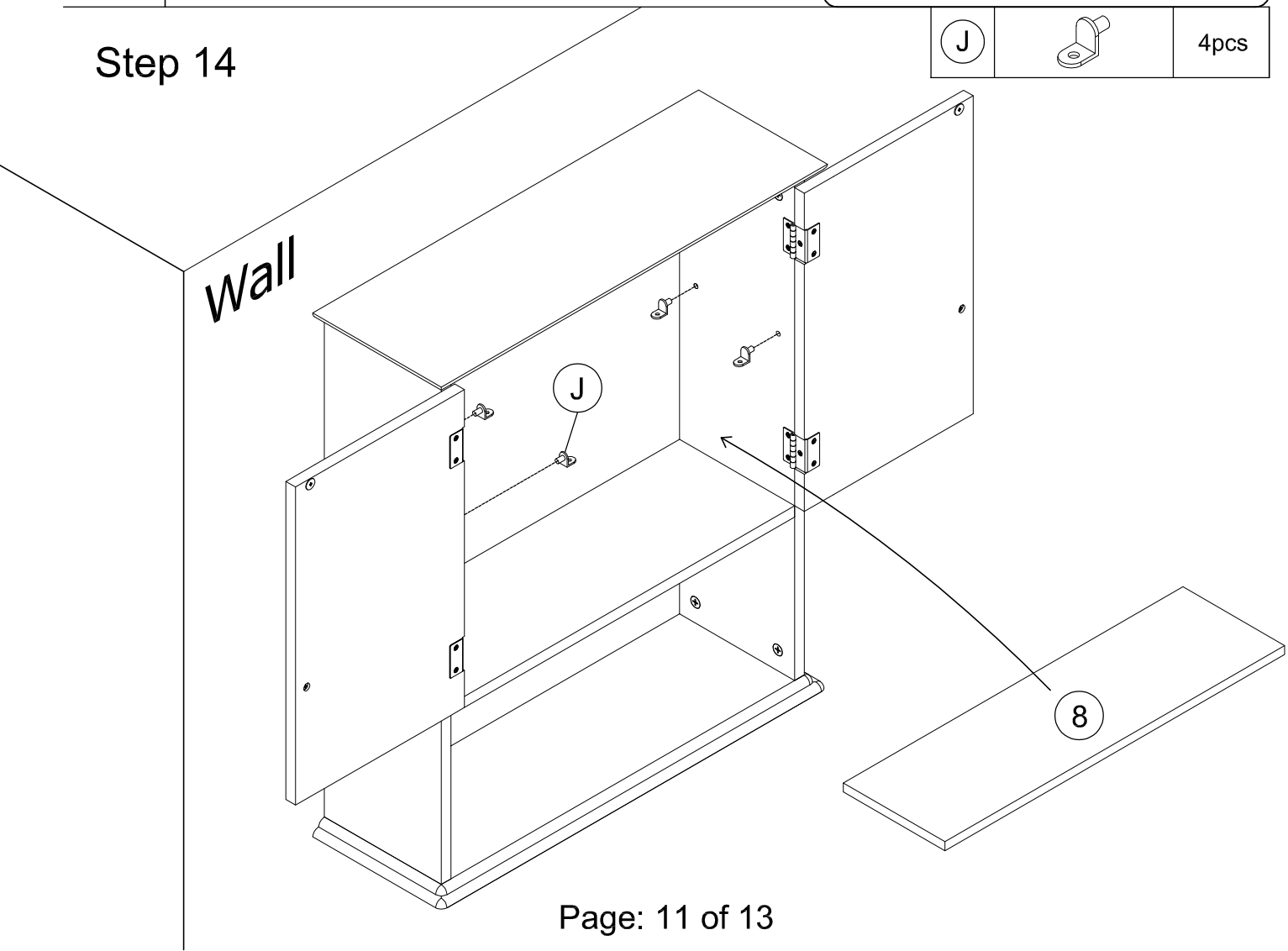

Final:

Wall

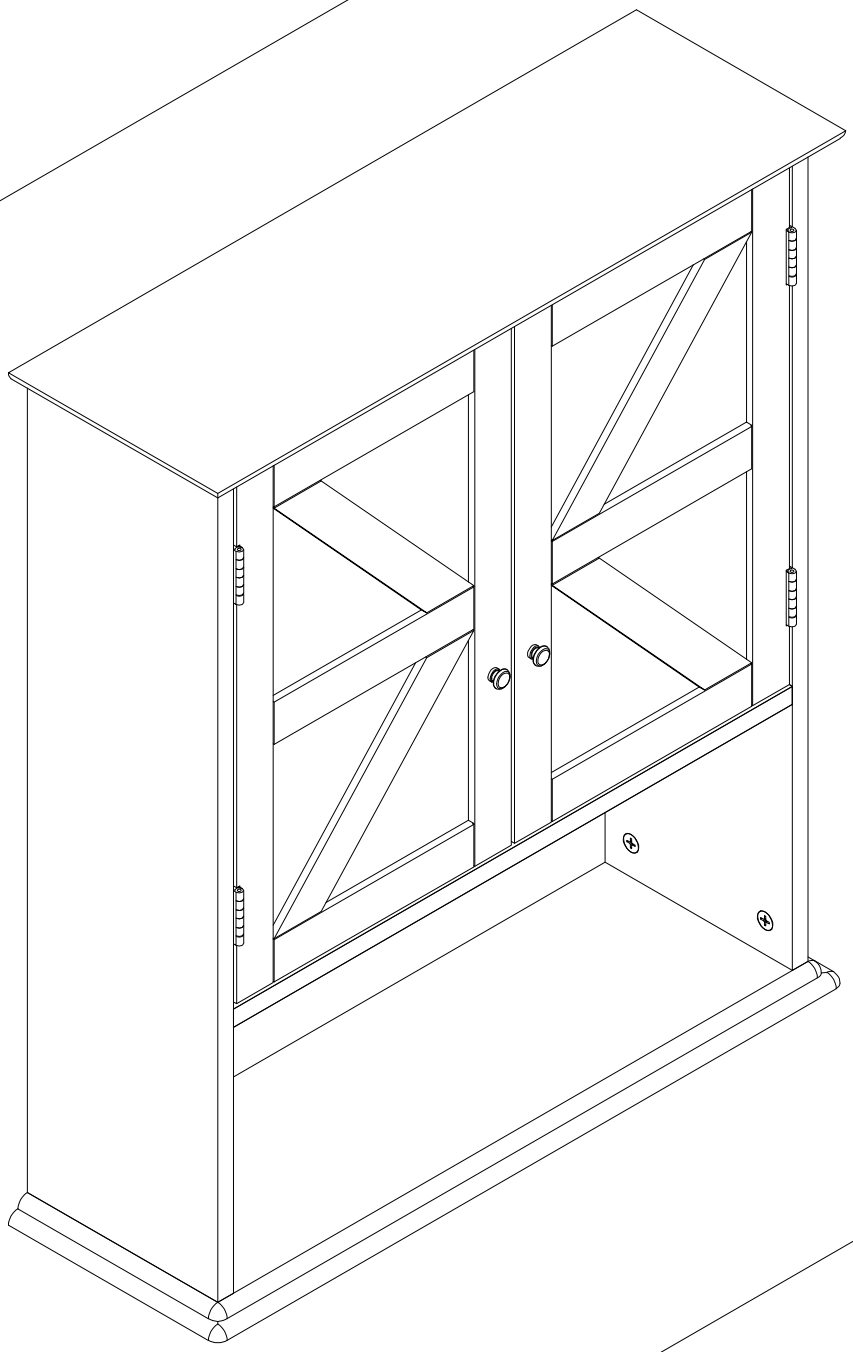

EN



Return / Damage Claim Instructions

⚠ **DO NOT discard the box / original packaging.**
In case a return is required, the item must be returned in original box. Without this your return will not be accepted.

⚠ **Take a photo of the box markings.**
A photo of the markings (text) on the side of the box is required in case a part is needed for replacement. This helps our staff identify your product number to ensure you receive the correct parts.

⚠ **Take a photo of the damaged part (if applicable).**
A photo of the damage is always required to file a claim and get your replacement or refund processed quickly. Please make sure you have the box even if it is damaged.

⚠ **Send us an email with the images requested.**
Email us directly from marketplace where your item was purchased with the attached images and a description of your claim.