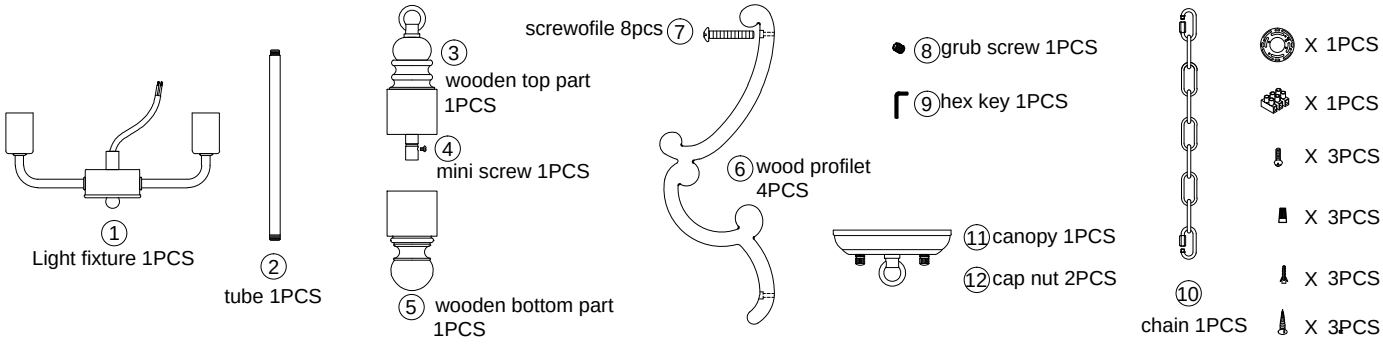

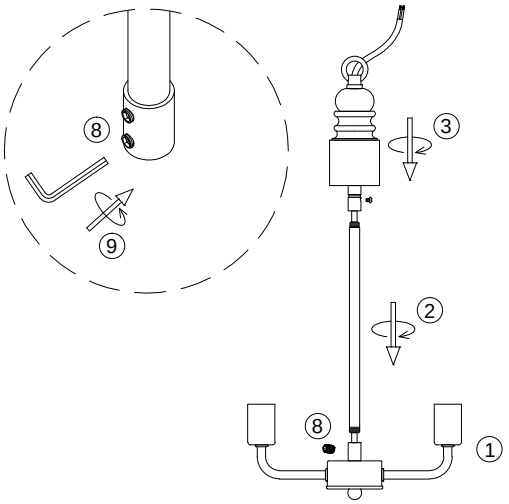

1.Let the wire of the fixture ① go through the tube ②, rotate to fix the tube ② on the fixture ①.
2.Let the wire go through the wooden top part ③, rotate to fix the top part ③ on the tube ②, lock tube ② to the fixture ① with grub screw ⑧ (use hex key ⑨ to rotate the grub screw ⑧).

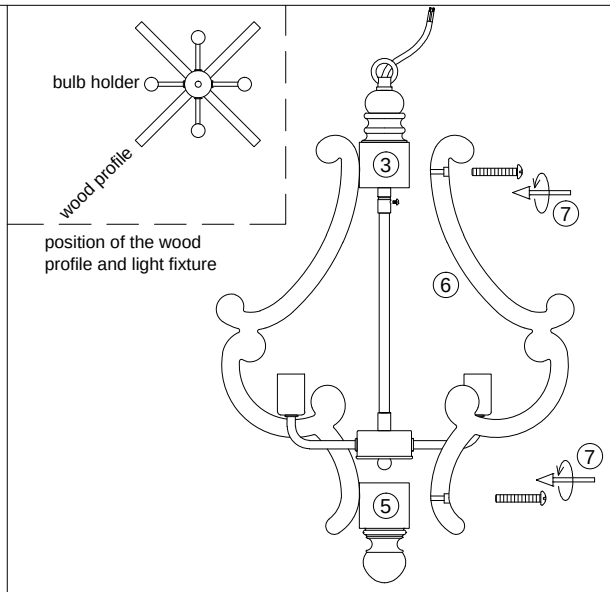

3.Install the wood profiles ⑥ to the wooden top part ③ and bottom part ⑤ with screw ⑦.

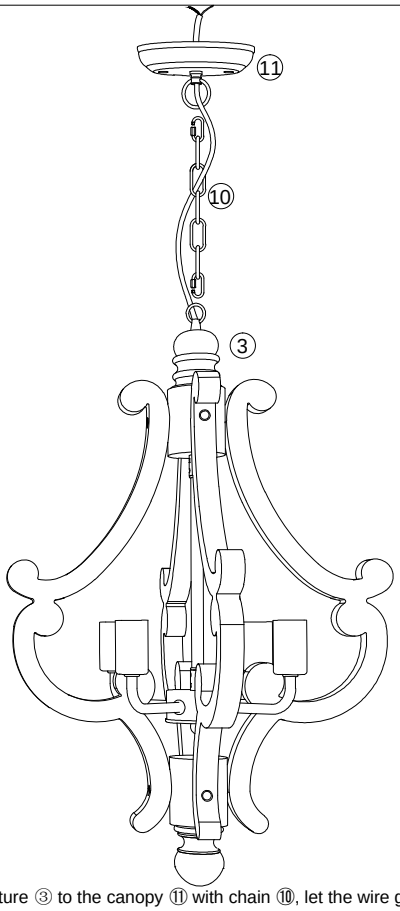

4.Hang the light fixture ③ to the canopy ⑪ with chain ⑩, let the wire go through chain ⑩ and canopy ⑪.

After adjust the wood profile and the fixture to the right position, lock the tube ② with mini screw ④.

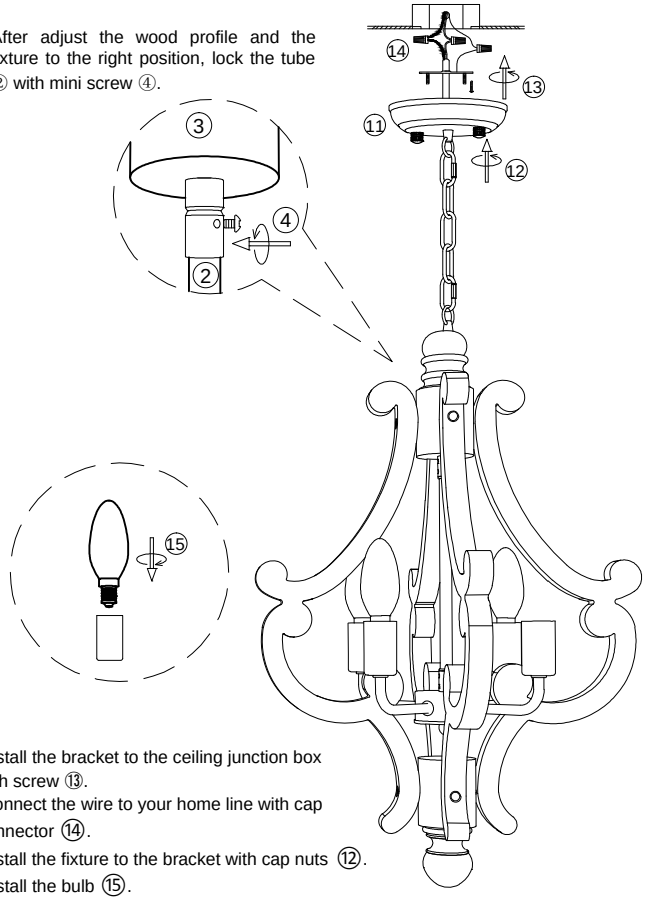

5.Install the bracket to the ceiling junction box with screw ⑬.
6.Connect the wire to your home line with cap connector ⑭.
7.Install the fixture to the bracket with cap nuts ⑫.
8.Install the bulb ⑮.

Please read carefully before installation!!!
Note : Please make sure that the electricity is powered off during installation !
Only a professional electrician should install this kind of product !