User’s Manual

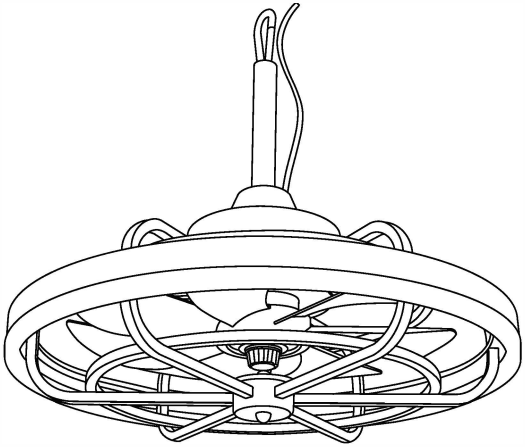

Warm Tips

About Light Memory:(Figure 1)

* Turn off the light (remote control).

* Turn on the light after 10 seconds to remain last light setting.

2. The lighting kit is non-replaceable.

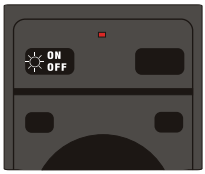

Figure 1

WARNING!!!

To avoid fire, shock and serious personal injury, follow these instructions.

1. Read your user's manual and safety information before installing your new fan. Review the accompanying assembly diagrams.
2. Before servicing or cleaning the unit, switch off the power at the service panel and lock the service panel to prevent power from being switched on accidentally. If the service disconnecting means cannot be locked, securely fasten a warning device, such as a tag, to the service panel.
3. Be cautious around the fan and blades when clearing, repairing, or working near the fan. Always turn off the power to the ceiling fan before performing any servicing.
4. Do not insert anything into the fan blades while the fan is operating.
5. This appliance is not intended for use by young children or individuals with disabilities without supervision. Young children should be supervised to ensure they do not play with the appliance.
6. Before installing your ceiling fan, refer to the section on the proper method of wiring your fan. If you feel that you do not have enough wiring knowledge or experience, it is recommended to have your fan installed by a licensed electrician.

Accessories

Check to see that you have received the following parts

2

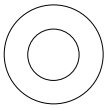

Washer

2

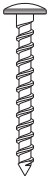

Self-tapping screw

2

Expansion screw

2

Hook

3

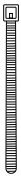

Zip ties

Package Contents

Check to see that you have received the following parts

1

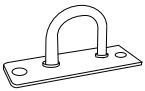

Mount bracket

1

Coupling cover

2

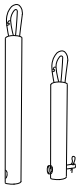

Downrods

1

Remote controller bracket

1

Remote controller

1

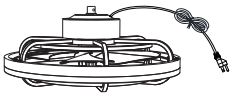

Lamp body

Energy Saving Usage

Ceiling fan performance and energy savings rely heavily on the proper installation and use of the ceiling fan. Here are a few tips to ensure efficient product performance.

Choosing the Appropriate Mounting Location

Ceiling fans should be installed or mounted in the middle of the room and positioned at least 7 feet above the floor and 18 inches away from the walls.
If the ceiling height allows, it is recommended to install the fan 7~9 feet above the floor to achieve optimal airflow.

Turn Off When Not in the Room

If the room is unoccupied, turn off the ceiling fan to conserve energy.

Using the Ceiling Fan Year Round

Summer Season: Use the ceiling fan in the counterclockwise direction. The airflow created by the ceiling fan produces a wind-chill effect, making you feel cooler. Select a fan speed that provides a comfortable breeze; lower speeds consume less energy.

Winter Season: Reverse the motor and operate the ceiling fan at a low speed in the clockwise direction. This produces a gentle updraft, which pushes the warm air near the ceiling down into the occupied space. Remember to adjust your thermostat when using your ceiling fan. This simple step can lead to additional energy and cost savings.

Installation

1

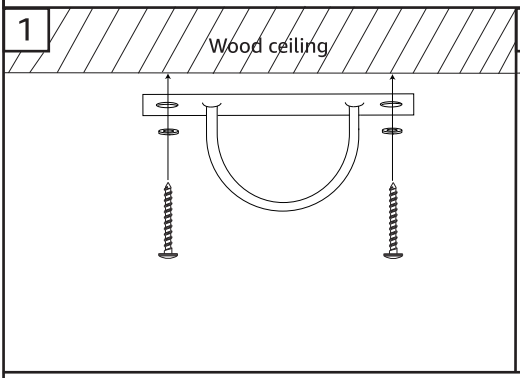

2

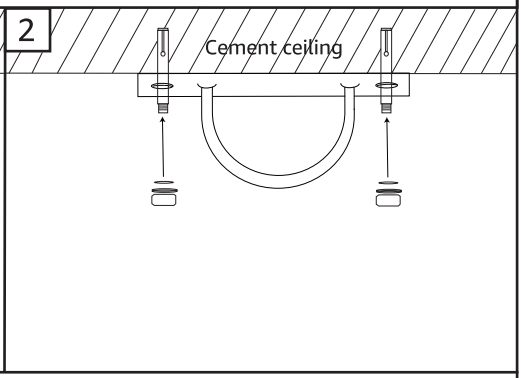

- Use self-tapping screws to drive into the wooden ceiling.
- Drill a hole on the cement ceiling, then use expansion screws to secure.

3

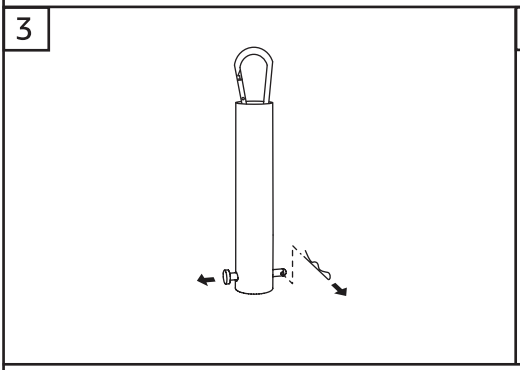

4

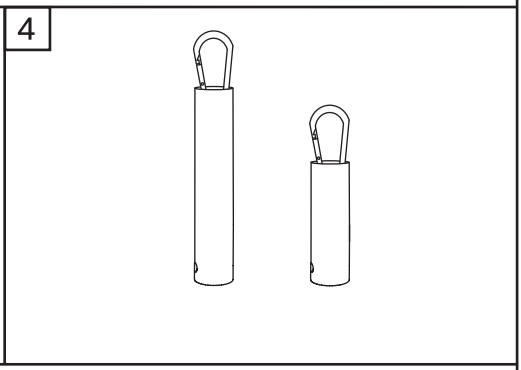

- Remove the downrod pin from the downrod assembly.
- Choose a downrod for the suspended installation.

5

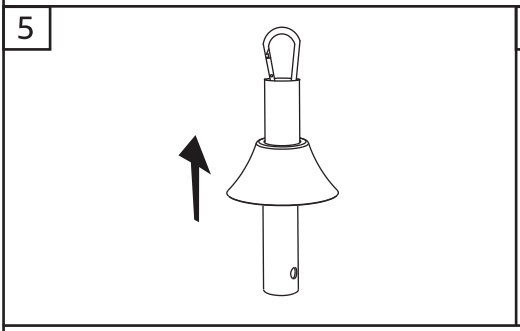

6

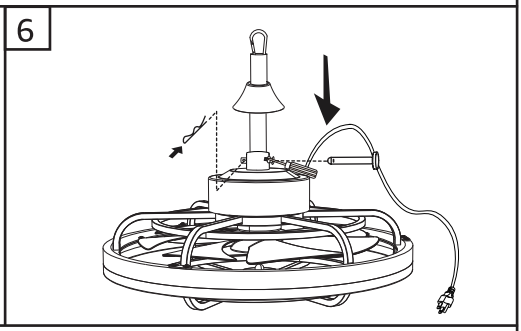

- Install the coupling cover onto the downrod.
- Assemble the downrods and yoke as shown in the diagram, then insert the downrod pin, lock it with the downrod clip, and finally tighten the two screws on the yoke.

Installation

7

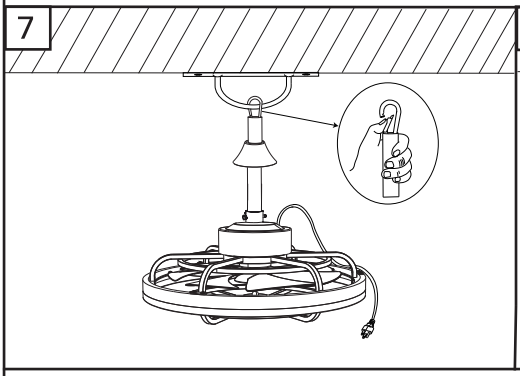

8

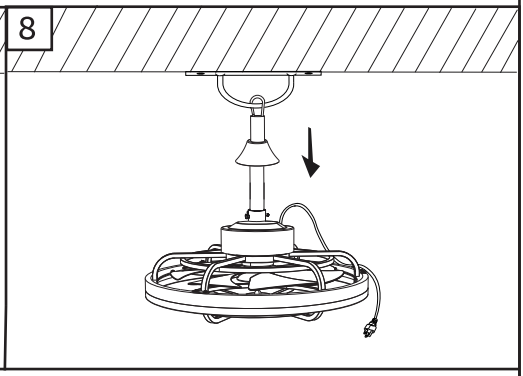

- Suspend the lamp on the mount bracket.
- Move the coupling cover downwards.

9

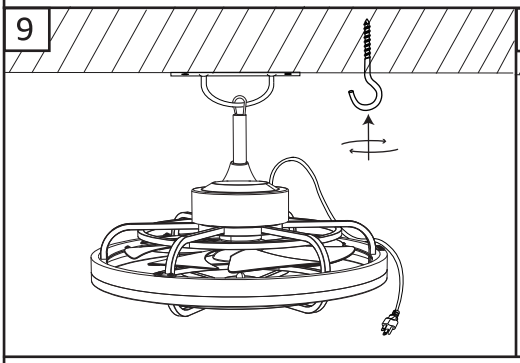

10

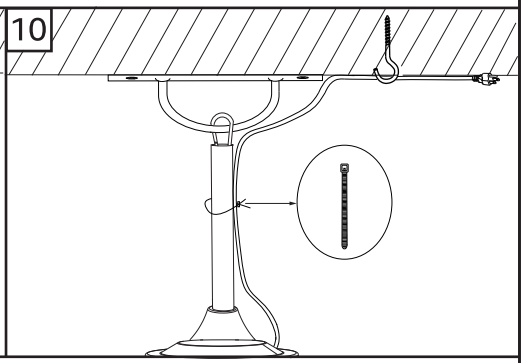

- Install the hook onto the ceiling.
- Use zip ties to bundle the power cord and hang the excess power cord on the hook.

11

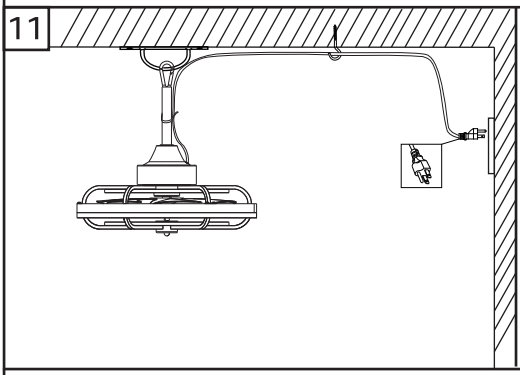

- Plug in and operate with remote controller.

Remote Control

ON OFF	Light on/off
ALL OFF	Light & fan /off
K	CCT change
★	Night light
☼+	Brightness +
☼-	Brightness -
K+	CCT + (cooler)
K-	CCT - (warmer)
SETUP	Pairing
F/R	Forward/reverse
2H	All off after 2 hours
1 2	Fan speed
3 4	Fan speed
5 6	Fan speed
❂	Natural wind
FAN OFF	Fan off

To operate the fan, please install 2 AAA batteries (included) in the handheld remote transmitter. If not used for extended periods of time, remove the batteries to prevent damage to the transmitter. Store the remote away from excessive temperatures and humidity.

Pairing method: (single/multiple fans)
The remote control transmitter can be used to control multiple receivers.
1. For the ceiling fan you want to pair, turn the main power switch off for at least 60 seconds.
2. Turn on the main power switch of the ceiling fan, then immediately click SETUP button.
3. The light will blink or beep to indicate a successful pairing. If the pairing process is unsuccessful, please repeat the above steps.

APP Control

- **NOTE: Install the APP on your phone, or search and install app from Google Play, Apple App Store, and other appstores. Make sure your phone is connected to the internet and <u>BLUETOOTH</u> enabled.**

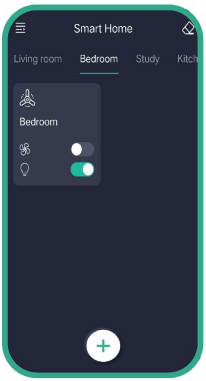

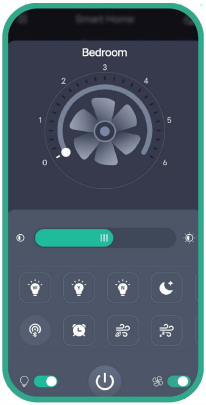

	Pair button. Click it within 5 seconds after turning on the fan from the power switch. Once the light flashes or beeps, it has been successfully paired with the phone and can be controlled through the phone.
	Slide to change the fan speed
	Slide to change the brightness of the light
	Timer the fan
	Sleeping wind
	Natural wind: fan speed will change automatically when use this function
	Fan moves reversely
	Oscillating funtion (N/A for this model)
	Fan moves forwards
	Night light (10% brightness in neutral white)
	Quick switch for "Natural" light color
	Quick switch for "Yellow" light color
	Quick switch for "White" light color
	Turn on/off the light
	Turn on/off the fan

Troubleshooting

PROBLEM	SUGGESTED REMEDY
If Fan Does Not Start	1. Check if the remote controller is paired and battery is working. 2. Check the outlet is in good condition.
If Fan Sounds Noisy	1. Make sure all screws in the yoke are snug. 2. Allow a “break-in” period of 24 hours. Most noises associated with a new fan will disappear after this period. 3. Check if the fan blades are in contact with the something.
If Fan Wobbles	1. Make sure that hook is scured. 2. Make sure all screws in the yoke are snug.
If Light Does Not Work	1. Check for loose wiring of the LED board.
Remote Does Not Work	1. Battery out of power or not installed correctly; change new AAA battery and ensure well installed. 2. After plugging into the outlet, press and hold the "**SETUP** " button after 60 seconds to re-pair the remote.

Installing Wall Plate

Attach wall plate using the two provided screws.

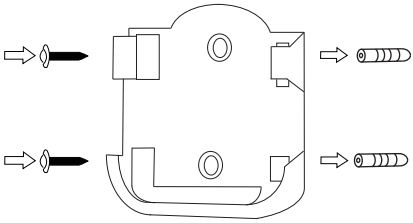

Customer Service

30-Days Full Refund Guarantee

If you are not completely satisfied or the item isn't what you expected, just tell us within 30 days. We will give you a full refund unconditionally.

Friendly Reminder

It's better to contact us than leaving a negative shopping experience. Nothing is more important than your satisfaction, and we will do our best to serve you.

Quick Response within 12 Hours

You can contact us without any hesitation at any time of the day, and we will reply to you within 12 hours. (It would be appreciated if you could provide us with a video or pictures, if available)

2-year Warranty

Your fan light comes with a two-year warranty. If a malfunction occurs due to product quality issues, we will assist in diagnosing the problem and provide replacement parts free of charge to ensure your fan light resumes normal operation.

Contact Information