BETTER HOME PRODUCTS

ASSEMBLY INSTRUCTIONS

CLOSET WITH RATTAN DOOR

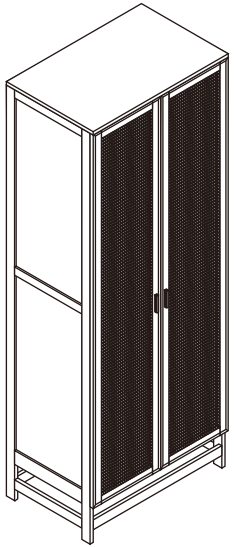

①		Φ1/4'' X 1 .1/2''	x32
②		Φ1X 0.43''	x32
③		Φ1/4''X 1.38''	x8
⑤		Φ0. 31X1.1/8''	x18
⑦		Φ1/8"X1.1/2"	x28
⑧		SCREWDRIVER	x1
⑨		GLUE	x1
⑩		SNAP	x16
⑪		Φ1/4"X1.1/8"	x4
⑫		HINGE	x6
⑬		Anti-collision sticker	x4
⑭		CLOTHES-HOOK	x2
⑮		HANDLE	x2
⑯			x4

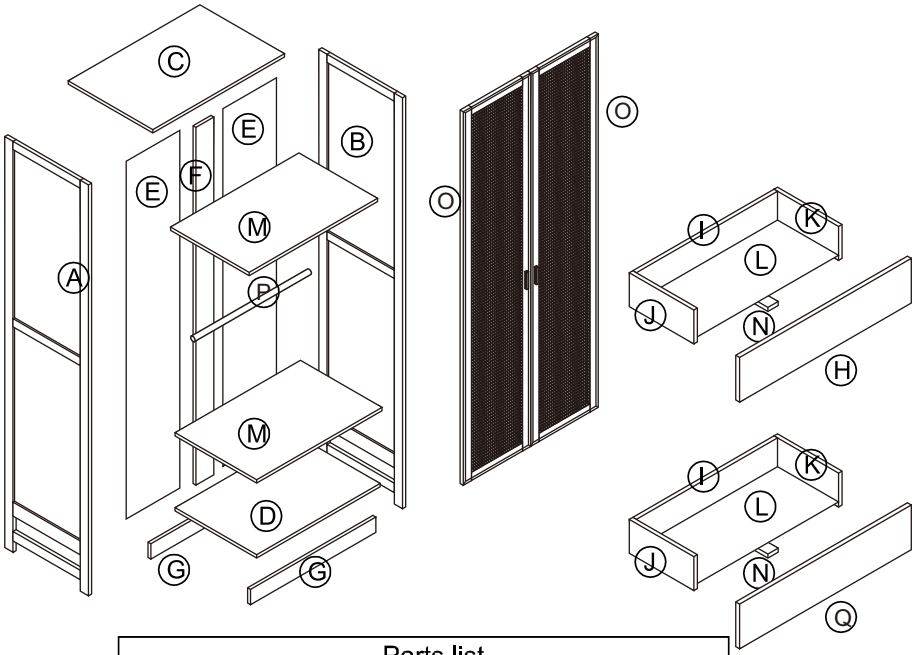

Parts list		
A	Left side panel	1 pc
B	Right side panel	1 pc
C	Top panel	1 pc
D	Bottom panel	1 pc
E	Back panel	2 pcs
F	Center support	1 pc
G	Kick plate	2 pcs
H	Drawer fronts	1 pc
I	Drawer back panels	2 pcs
J	Left drawer side panels	2 pcs
K	Right drawer side panels	2 pcs
L	Drawer bottom panels	2 pcs
M	Shelf board	2 pcs
N	Drawer bottom support	2 pcs
O	Cabinet door	2 pcs
P	Clothes rail	1 pc
Q	Drawer fronts	1 pc

STEP 1

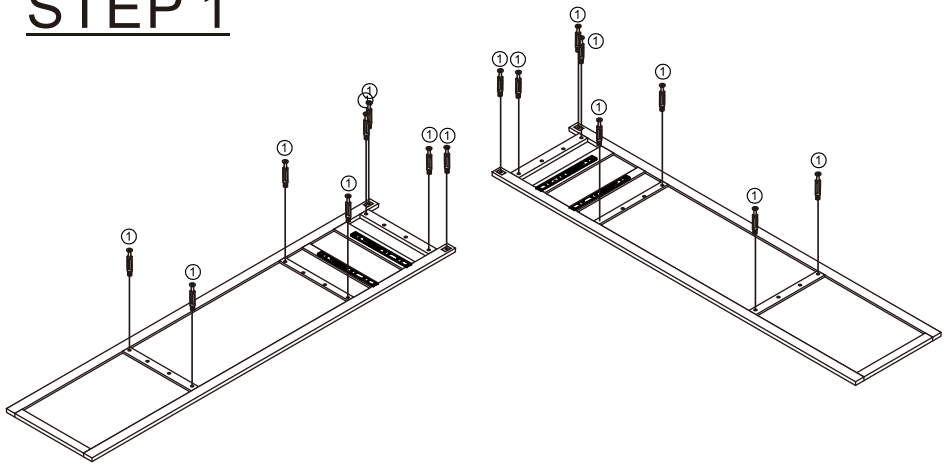

①		Φ1/4'' X 1 .1/2''	x16

STEP 2

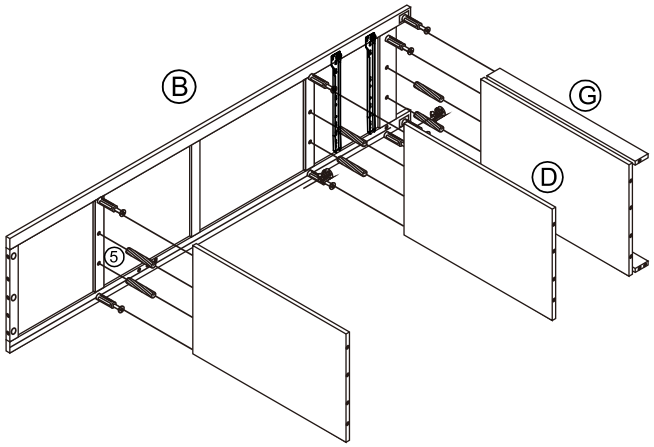

②		Φ1X 0.43''	x8
⑤		Φ0. 31X1.1/8''	x6

STEP 3

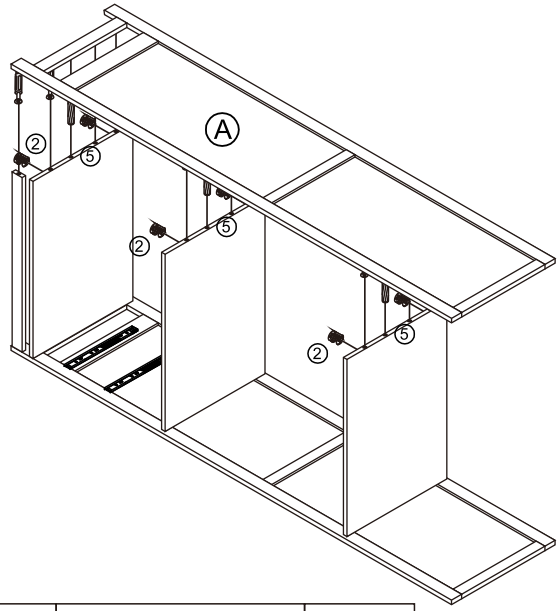

②		Φ1X 0.43''	x8
⑤		Φ0. 31X1.1/8''	x6

STEP 4

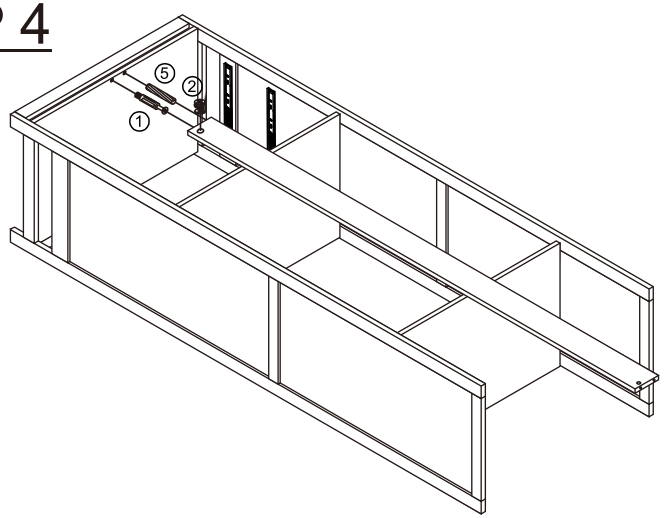

①		Φ1/4'' X 1 .1/2''	x1
②		Φ1X 0.43''	x1
⑤		Φ0. 31X1.1/8''	x1

STEP 5

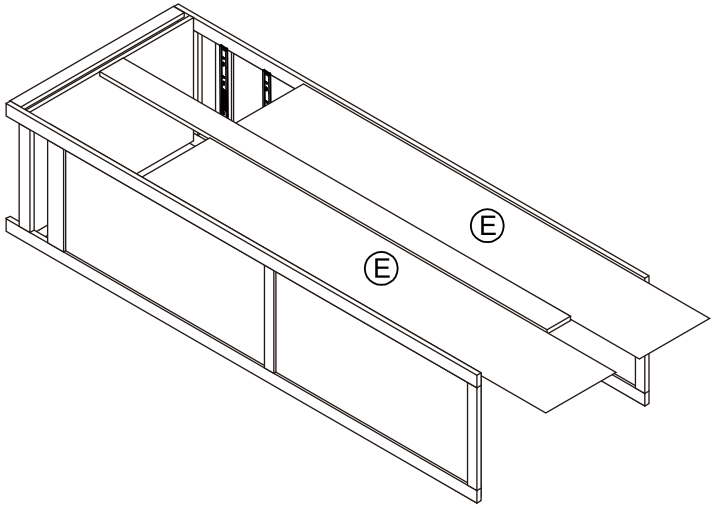

STEP 6

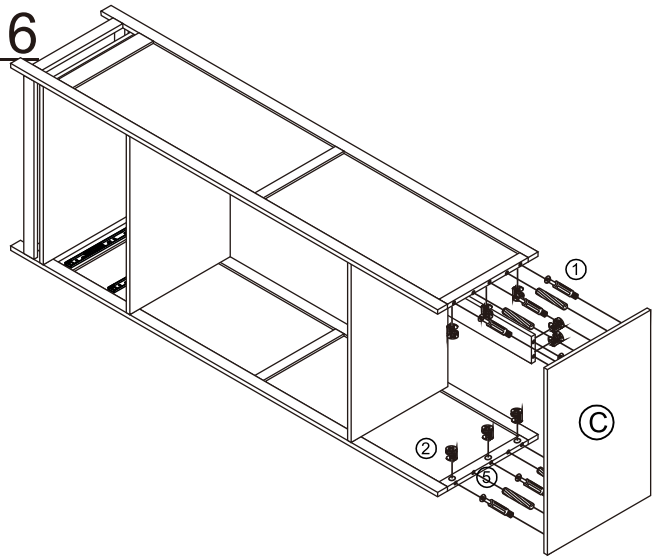

①		Φ1/4'' X 1 .1/2''	x7
②		Φ1X 0.43''	x7
⑤		Φ0. 31X1.1/8''	x5

STEP 7

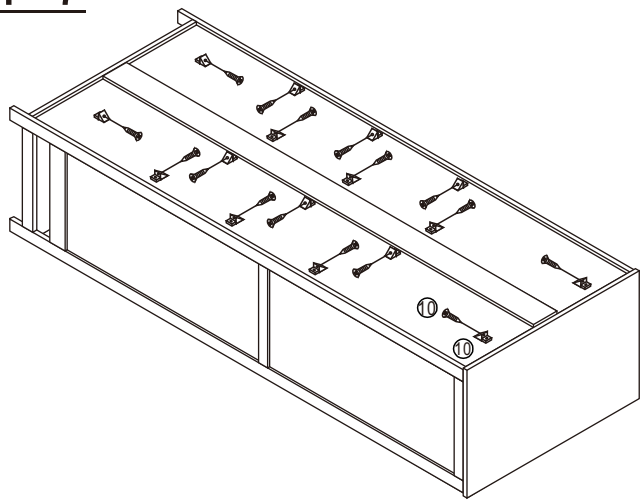

⑩		SNAP	x16

STEP 8

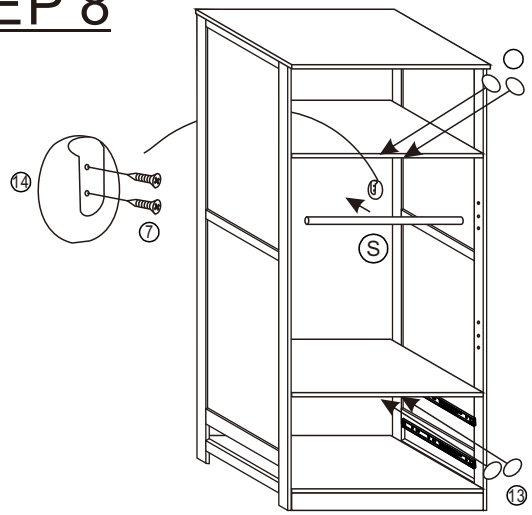

⑦		SCREW	x4
⑭		CLOTHES-HOOK	x2
⑬		Anti-collision sticker	x4

STEP 9

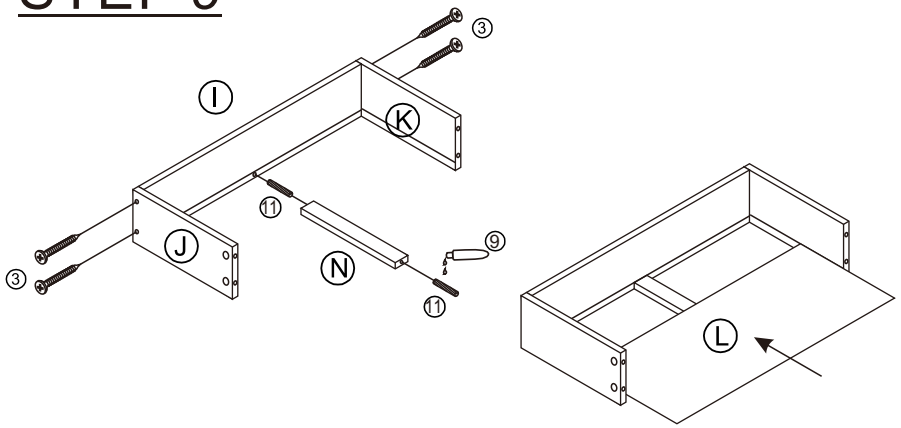

③		Φ1/4''X 1.38''	x4
⑪		Φ1/4"X1.1/8''	x2
⑨		GLUE	x1

STEP 10

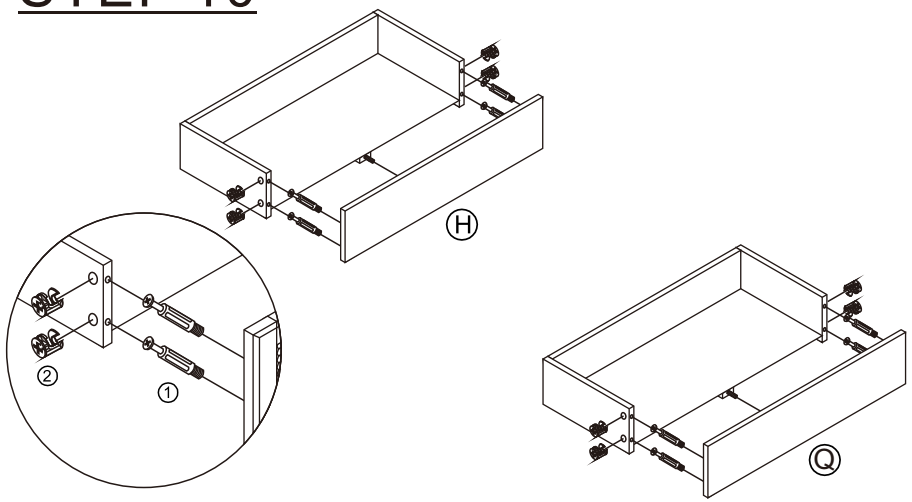

①		Φ1/4'' X 1 .1/2''	x4
②		Φ1X 0.43''	x4

STEP 11

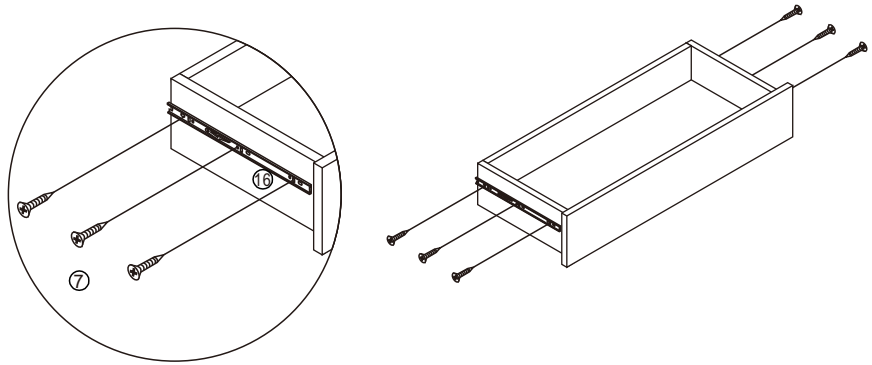

⑦		Φ1/8"X1.1/2"	x6
⑯			x4

STEP 12

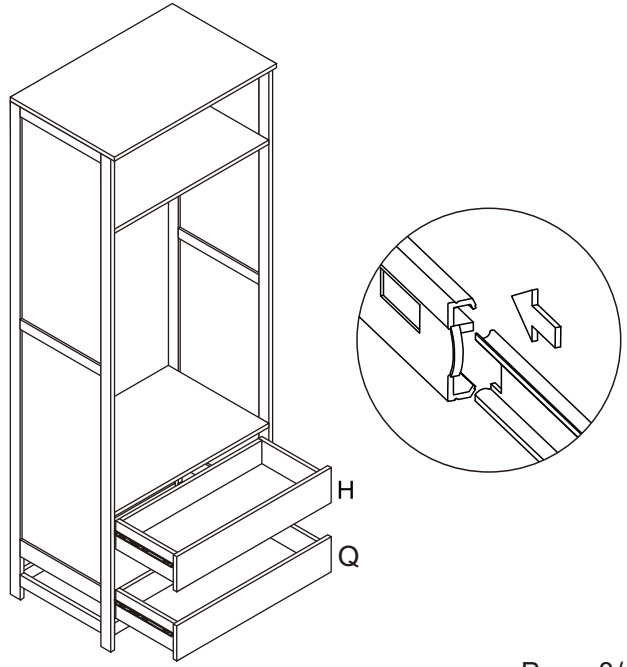

STEP 13

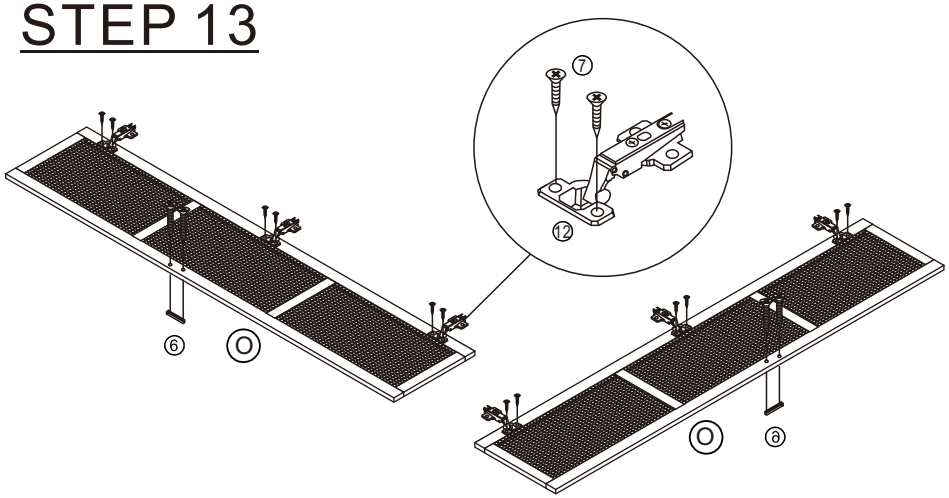

⑦		SCREW	x12
⑫		HINGE	x6
⑮		HANDLE	x2

STEP 14

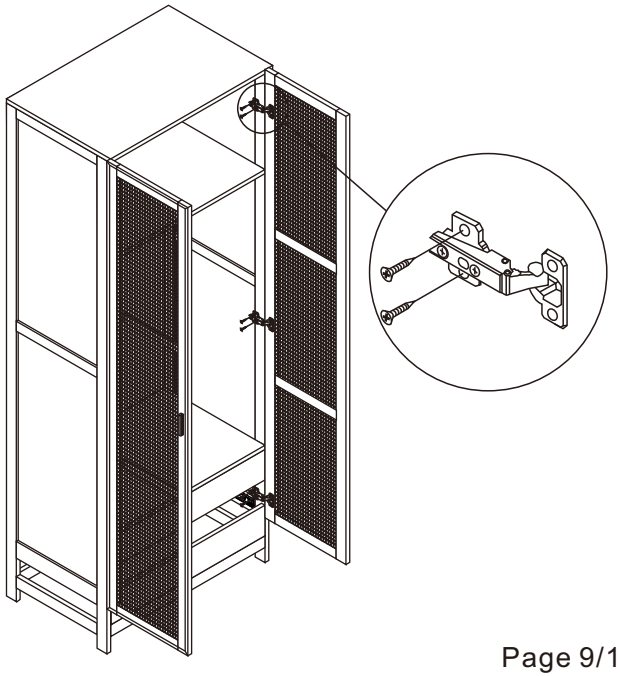

THANK YOU

We hope you enjoy your new purchase.

We have personally inspected this product.

In the event that you need any additional help for any reason,

Please do not hesitate to contact us