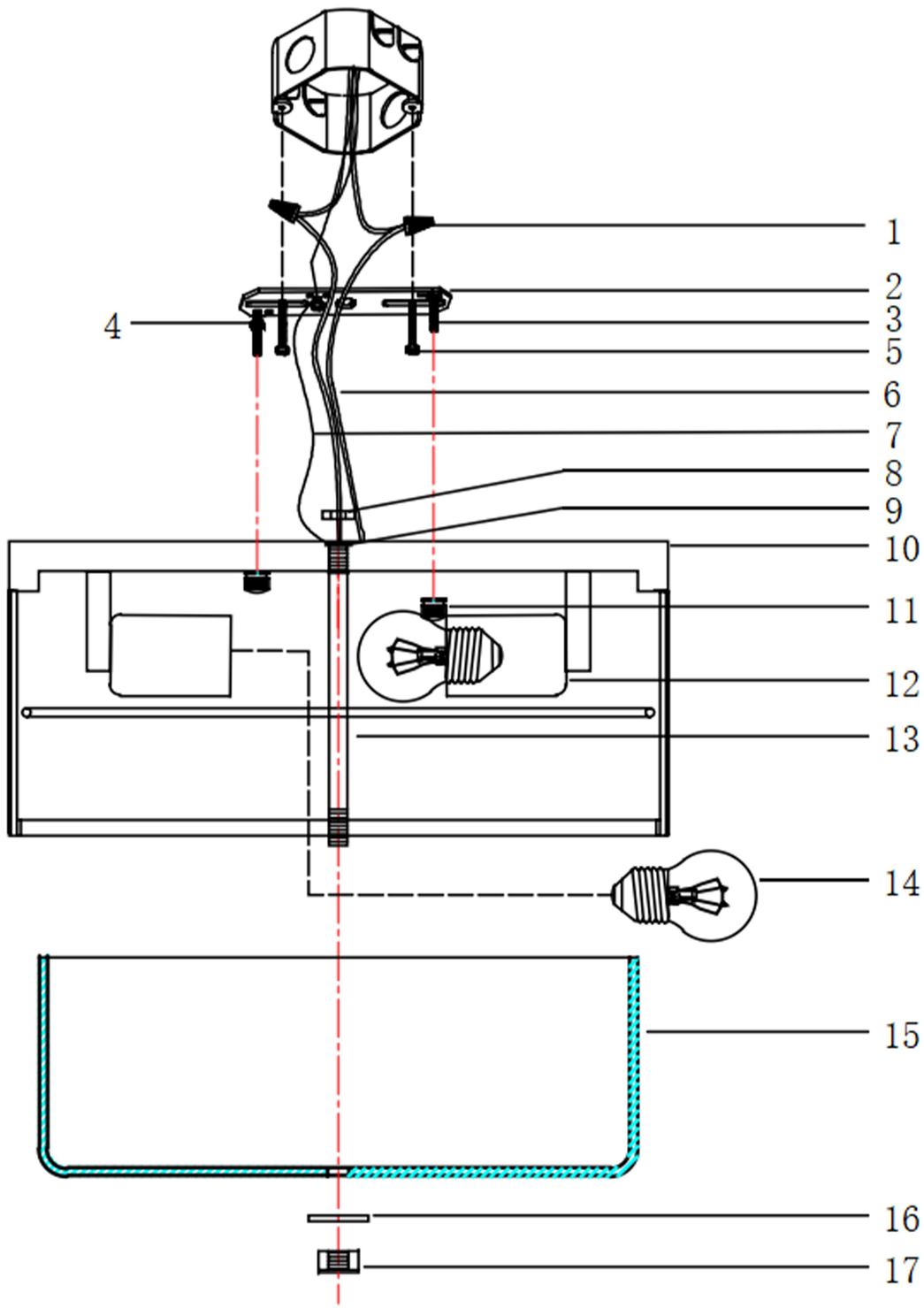

Installation Steps:

Step 1: Fix the straight tube(13) through the straight-sided basin (10) with nuts (8) shim(9).
Step 2: Attach the screws (4) to the mounting plate (2) and align the corresponding holes in the straight-sided basin (10).
Step 3: Fix the mounting plate(2) to the junction box with the screws (5).
Step 4: Connect the light body power cable (6) to the external power cable with the wiring cap (1) and the ground cable (7) with the green screw.
Step 5: Fix the straight-sided basin (10) to the mounting plate (2) with nuts (11) and screws (3) (4).
Step 6: Attach the light bulb (not included) (14) to the lamp head (12).
Step 7: Fasten the straight-sided basin (10) to the glass cover (15) with fittings (13) (16) (17)

Accessories:

Part 2: Mounting Plate*1	
Part 3: Mounting Screw*2	
Part 5: Mounting Screw*2	
Part 1: Wiring cap*2	
Part 11: Nut*2	
Part 8: nut*1	
Part 9: shim*1	
Part 13: Straight tube*1	
Part 16: Straight tube*1	
Part 17: Flat mother*1	

Notice: This light fixture should be installed in accordance with all applicable, local installation codes, and by a person familiar with the construction and operation of it, as well as the hazards involved. Inspect items and contents carefully. If any damage or defect is found, do not install it.