HZJL-V1

FTHKCT-2016

FTHKCT-2017

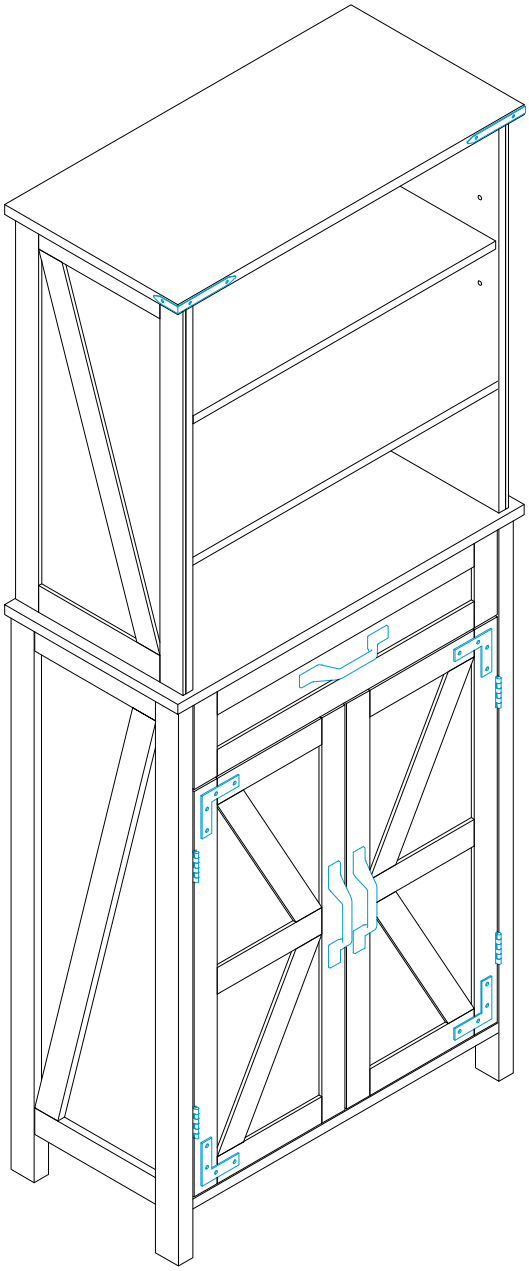

Parts List

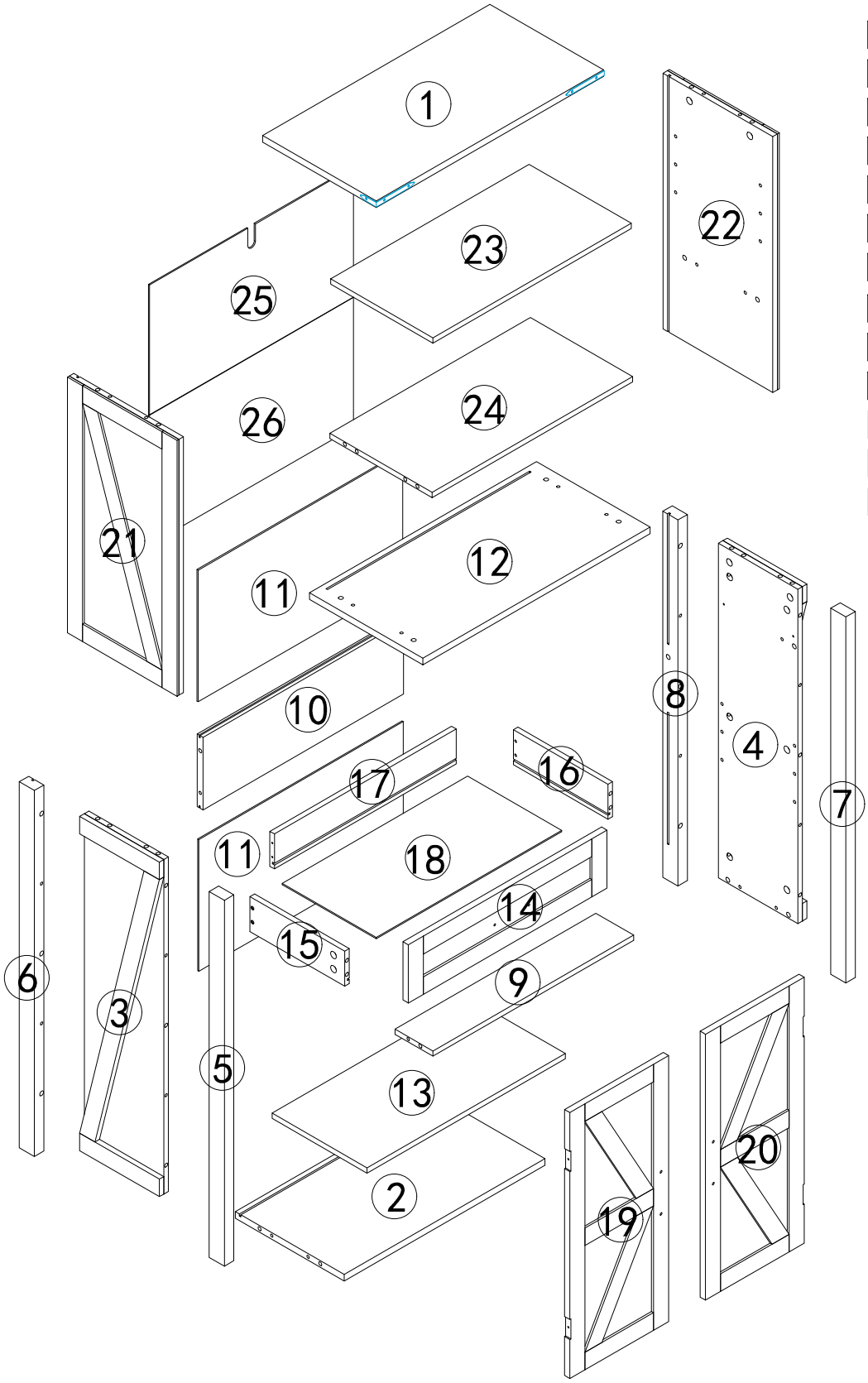

Parts

☐ ① x1	☐ ⑭ x1
☐ ② x1	☐ ⑮ x1
☐ ③ x1	☐ ⑯ x1
☐ ④ x1	☐ ⑰ x1
☐ ⑤ x1	☐ ⑱ x1
☐ ⑥ x1	☐ ⑲ x1
☐ ⑦ x1	☐ ⑳ x1
☐ ⑧ x1	☐ ㉑ x1
☐ ⑨ x1	☐ ㉒ x1
☐ ⑩ x1	☐ ㉓ x1
☐ ⑪ x2	☐ ㉔ x1
☐ ⑫ x1	☐ ㉕ x1
☐ ⑬ x1	☐ ㉖ x1

Parts List

1 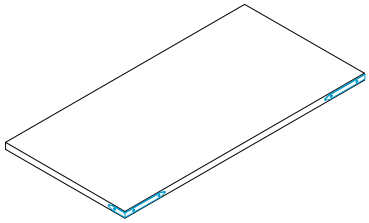 1 PC	2 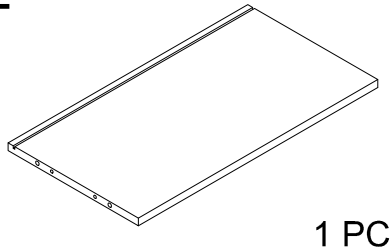 1 PC	3 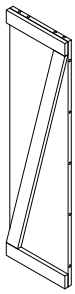 1 PC
4 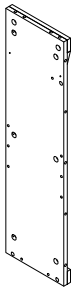 1 PC	5 1 PC	6 1 PC
7 1 PC	8 1 PC	9 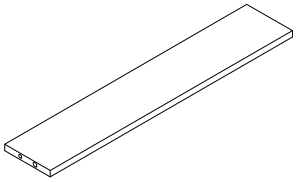 1 PC
10 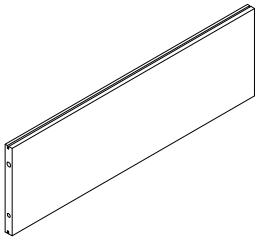 1PC	11 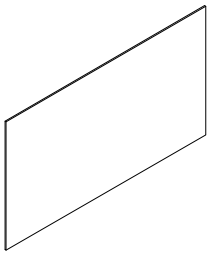 2 PC	12 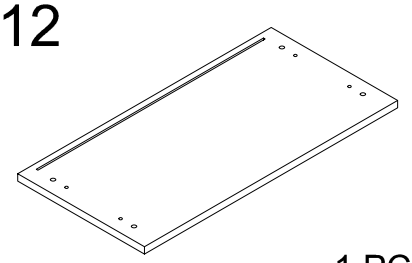 1 PC
13 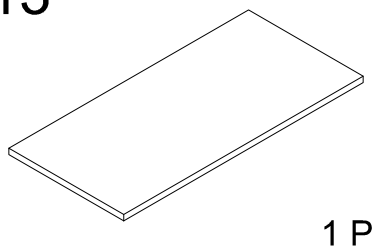 1 PC	14 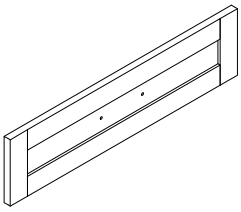 1 PC	15 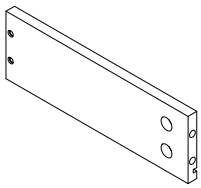 1 PC

Parts List

16 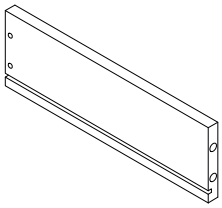 1 PC	17 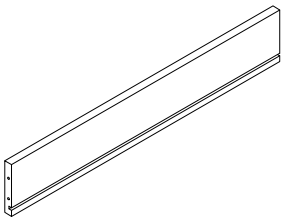 1 PC	18 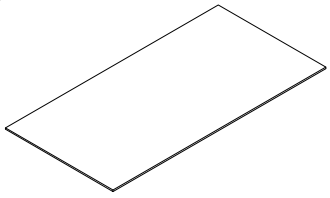 1 PC
19 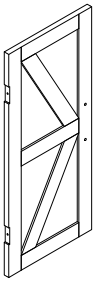 1 PC	20 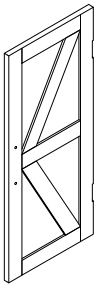 1 PC	21 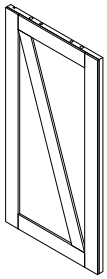 1 PC
22 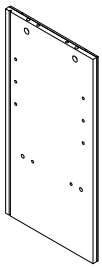 1 PC	23 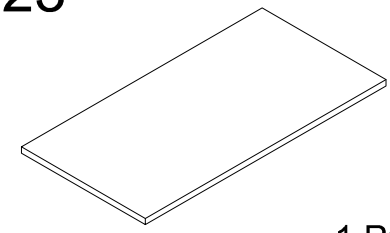 1 PC	24 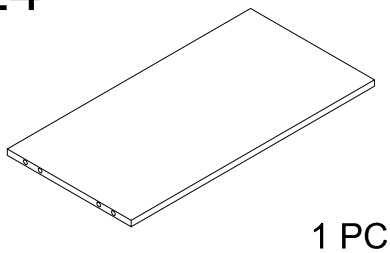 1 PC
25/26 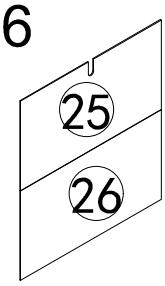 1 PC		

Hardware List

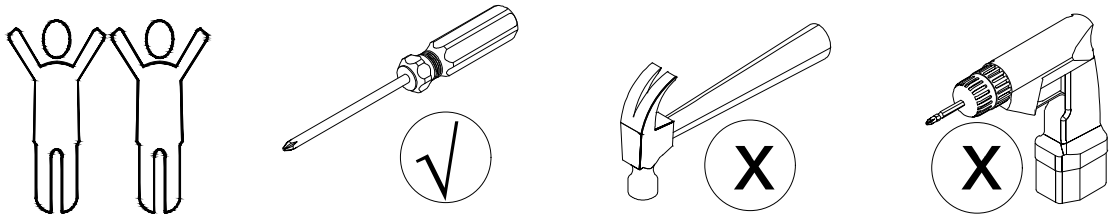

A Ø6*36MM 36PCS	B DL DR CL CR 10inch 1Set	C Ø3.5*12MM 10PCS
D Ø15*9MM 36PCS	E Ø6*30MM 32PCS	F Ø3.5*14MM 23PCS
G G1 G2*2 44*16*12MM 1Sets	H 60*32*15MM 1PCS	I Ø4*30MM 4PCS
J M4*14MM 2PCS	K 150*26*17MM 3PCS	L Ø6*16MM 8PCS
M Ø3*12MM 16PCS	N 64*64*1MM 4PCS	O 44*16*1MM 4PCS
P M4*18MM 4PCS	Q 15*17*10 16PCS	R Ø3*16MM 16PCS
S Ø8*35MM 1PCS	T Ø4*37MM 1PCS	

Assembly Steps

CAM BOLT INSTALLATION AS BELOW:

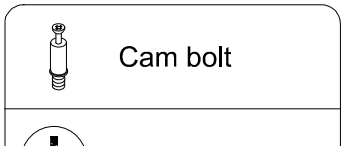

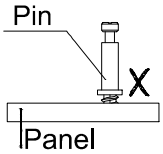

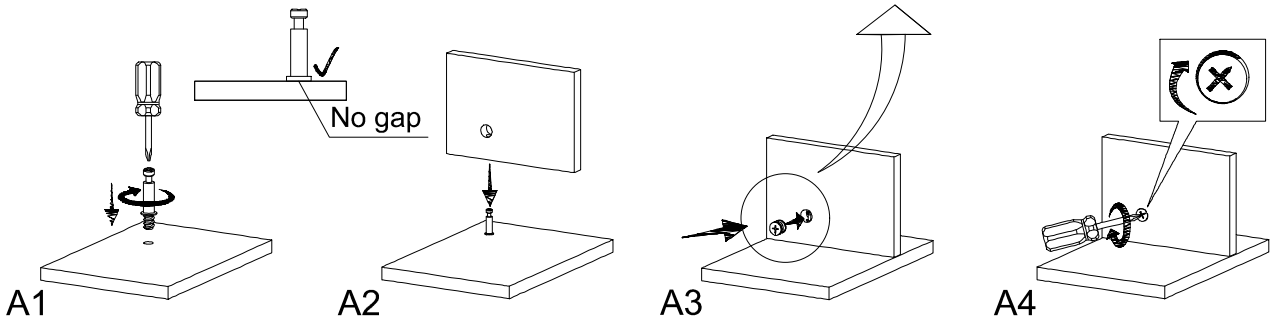

STEP 1

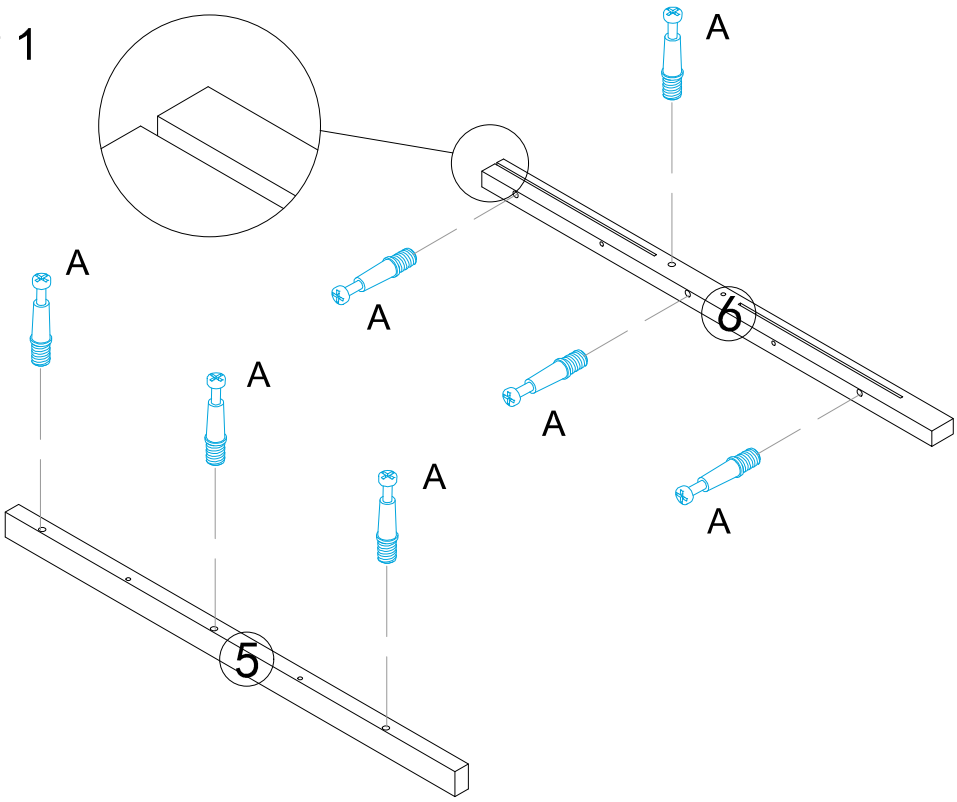

	A*7PCS

Assembly Steps

STEP 2

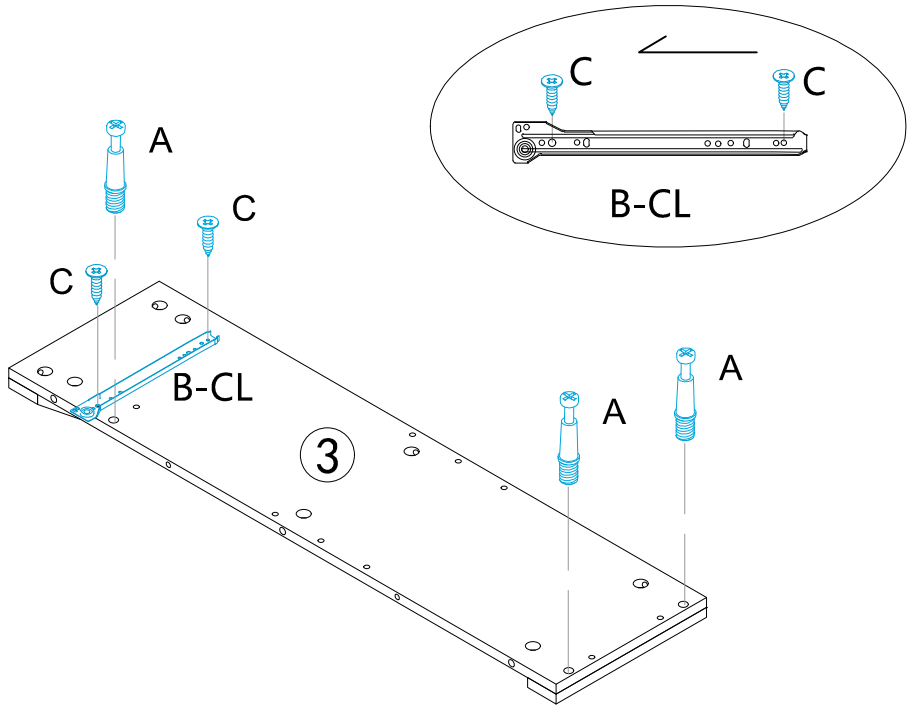

	A*3PCS
	B-CL*1PCS
	C*2PCS

STEP 3

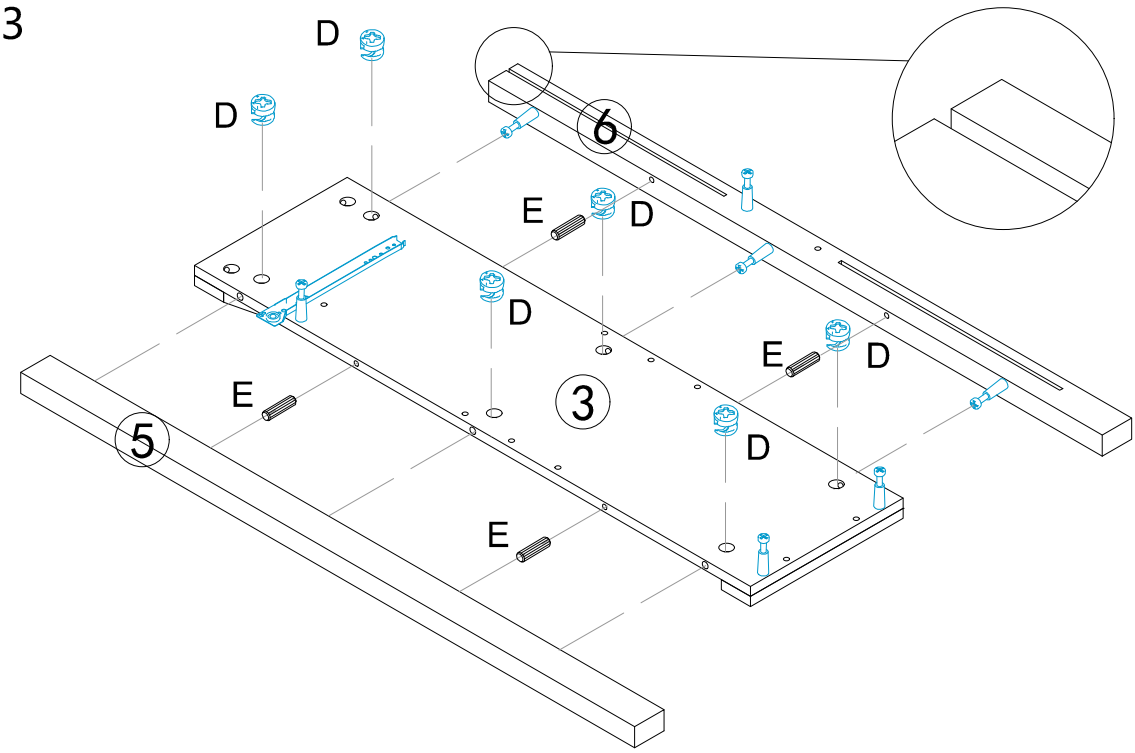

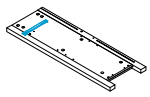

	D*6PCS
	E*4PCS

Assembly Steps

STEP 4

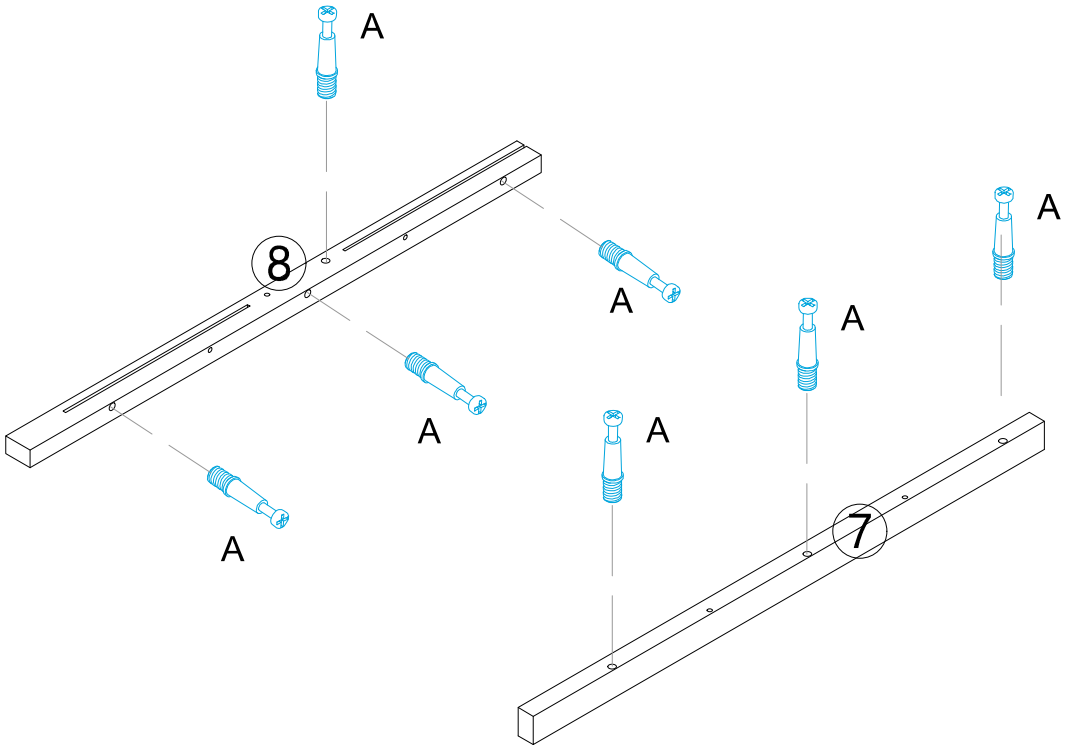

	A*7PCS

STEP 5

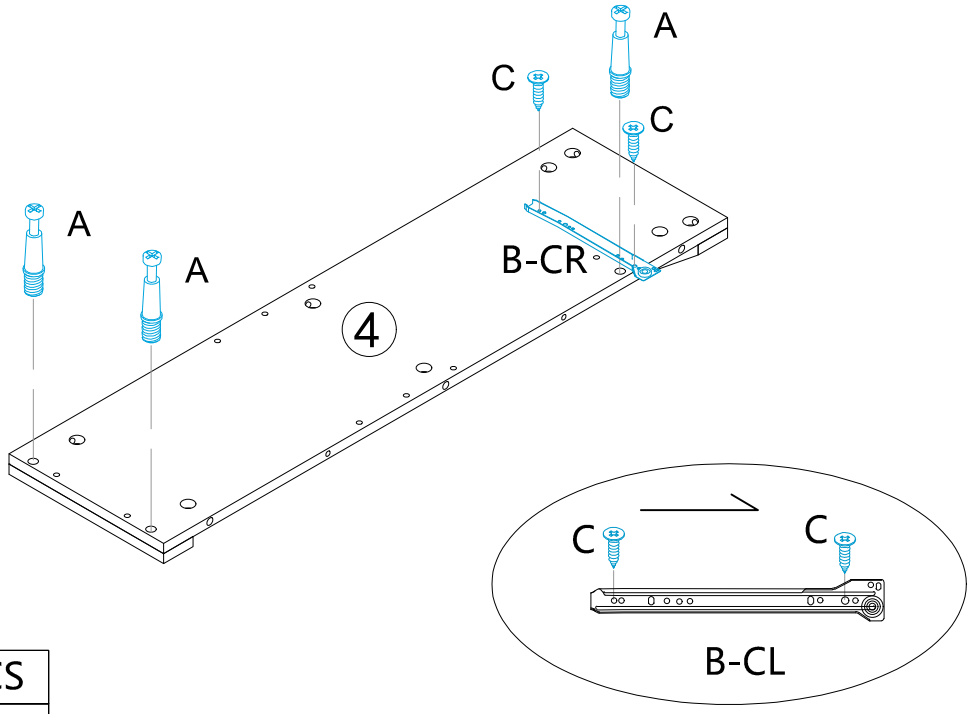

	A*3PCS
	B-CR*1PCS
	C*2PCS

Assembly Steps

STEP 6

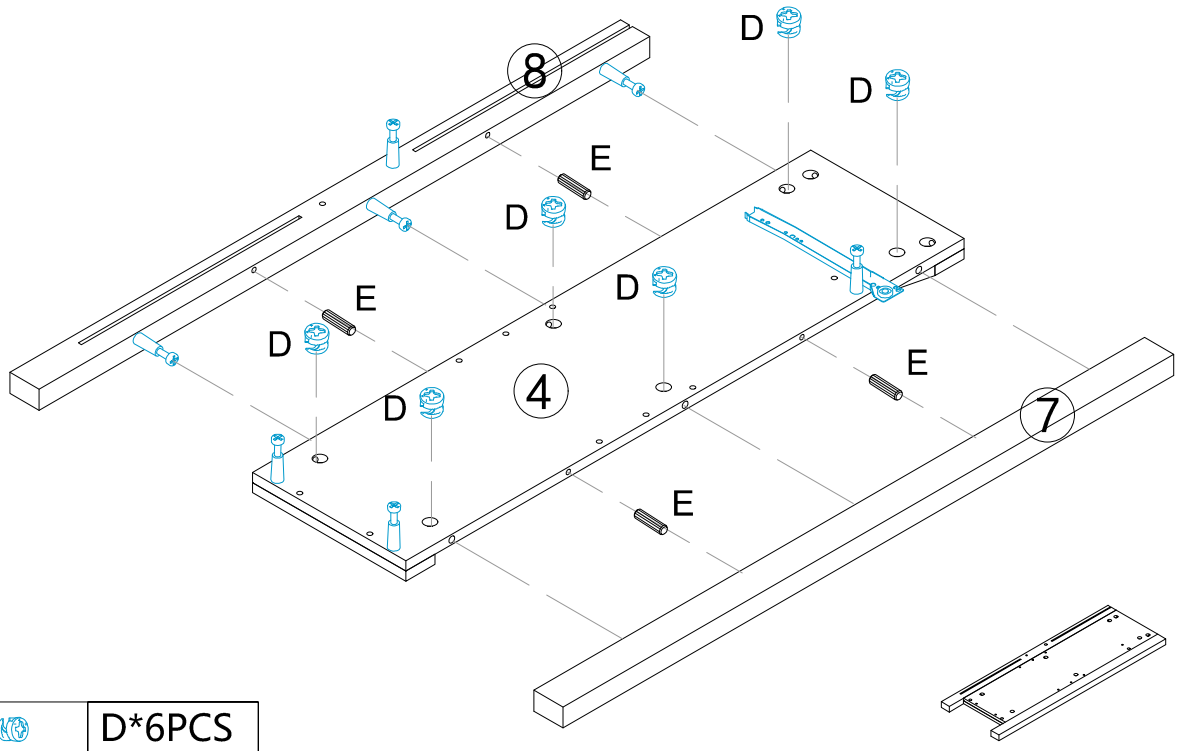

	D*6PCS
	E*4PCS

STEP 7

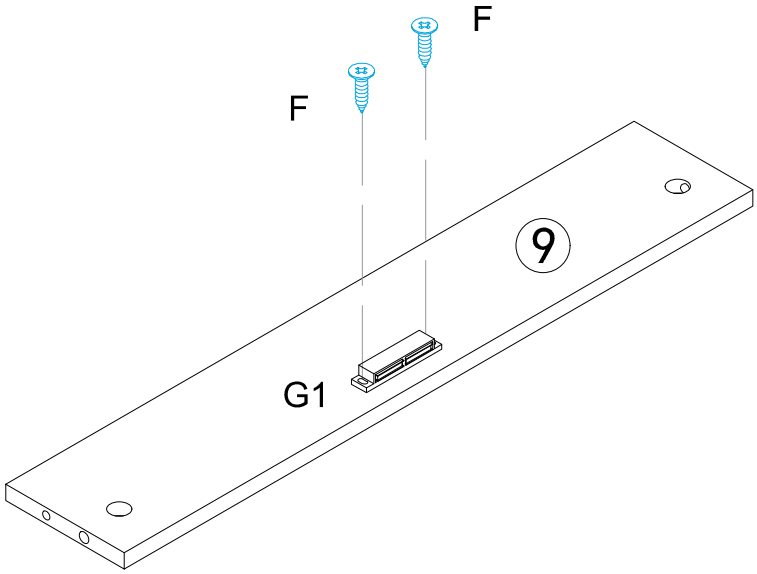

	F*2PCS
	G1*1PCS

Assembly Steps

STEP 8

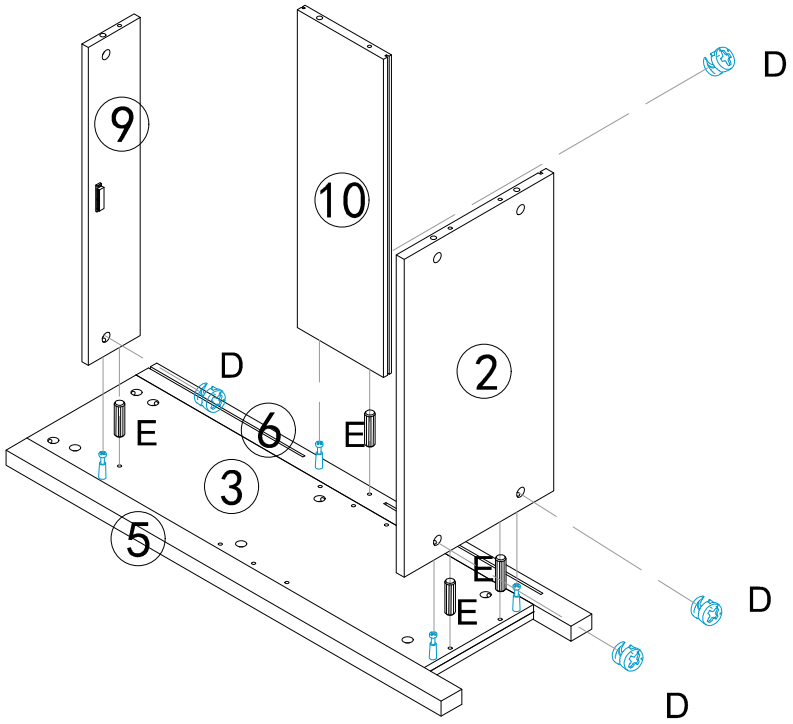

	D*4PCS
	E*4PCS

STEP 9

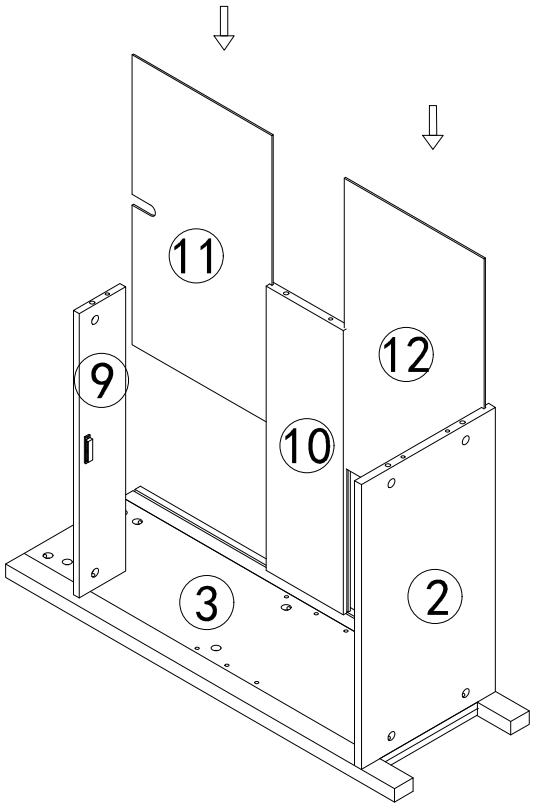

Assembly Steps

STEP 10

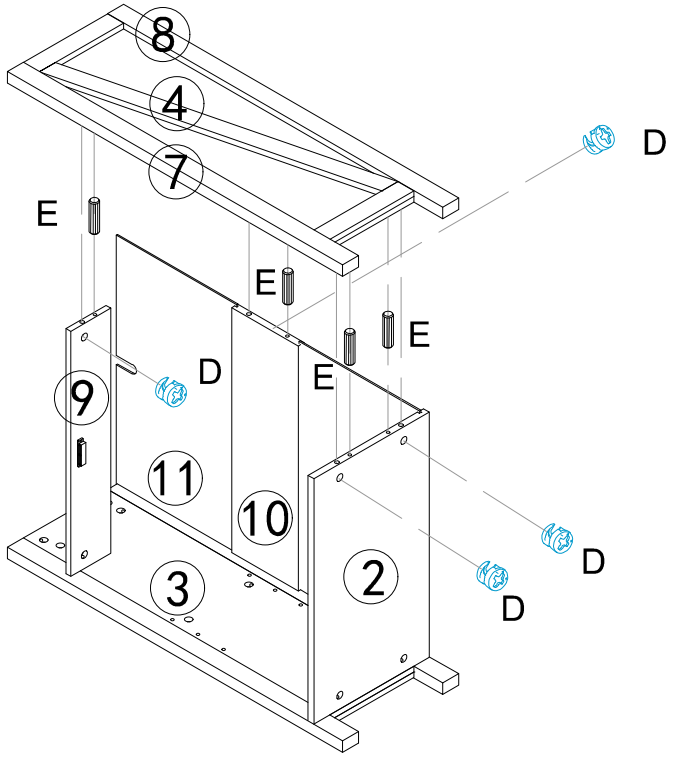

	D*4PCS
	E*4PCS

STEP 11

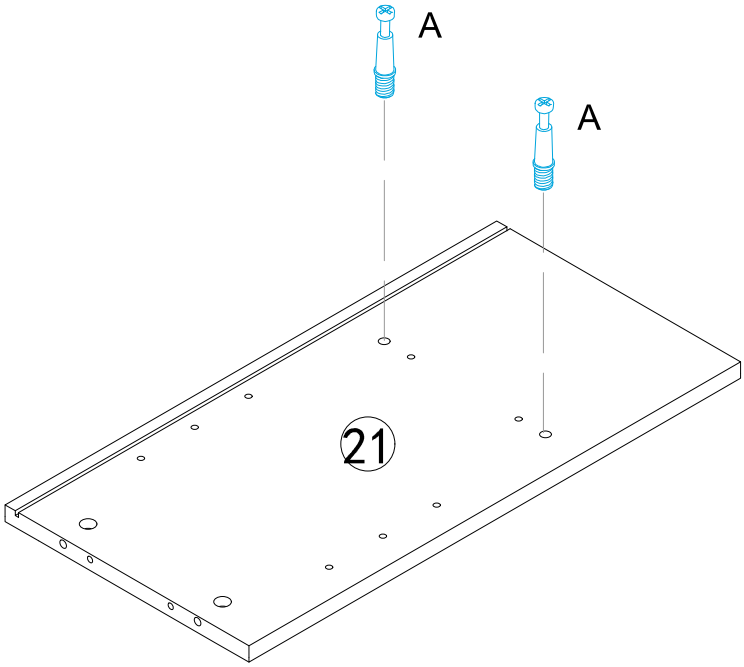

	A*2PCS

Assembly Steps

STEP 12

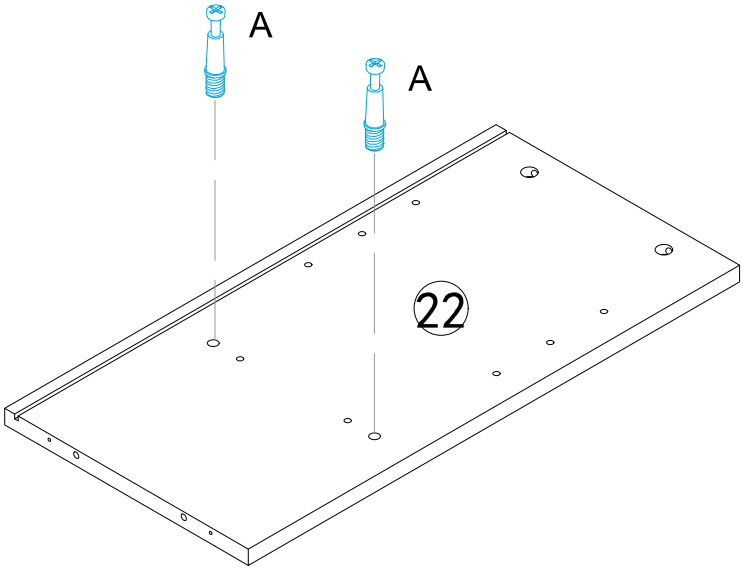

	A*2PCS

STEP 13

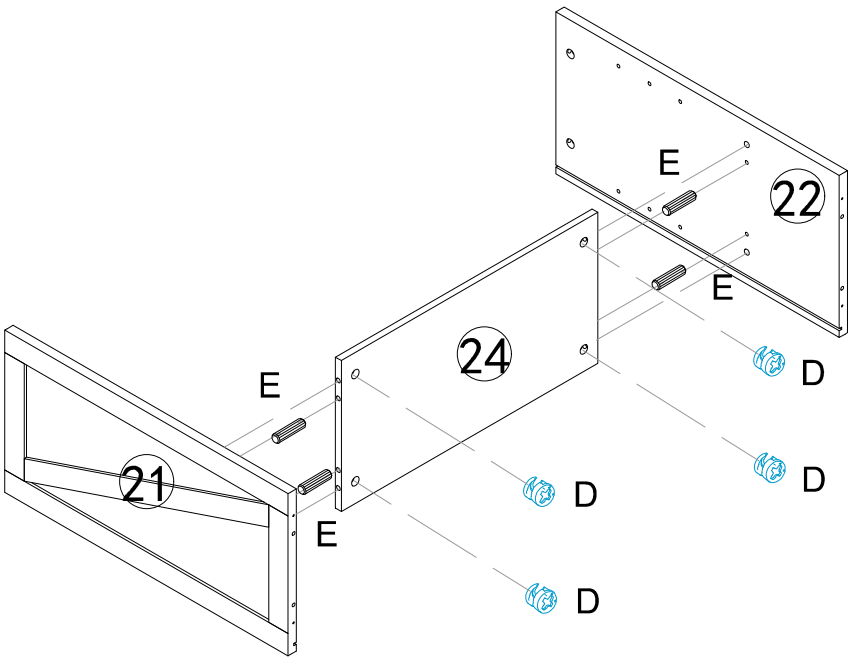

	D*4PCS
	E*4PCS

Assembly Steps

STEP 14

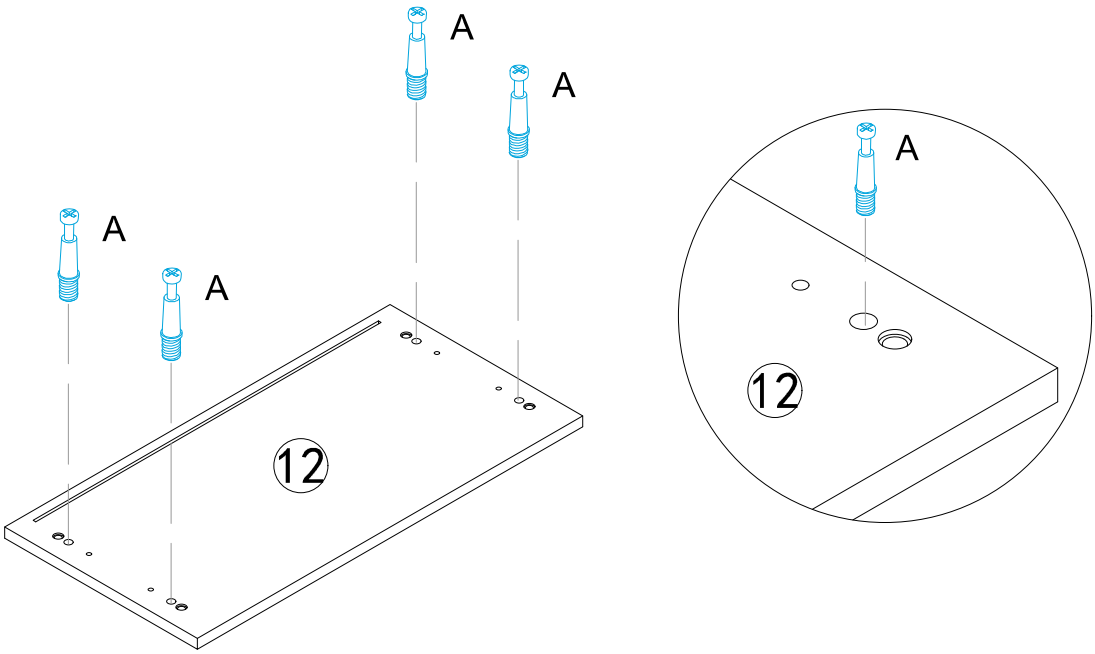

	A*4PCS

STEP 15

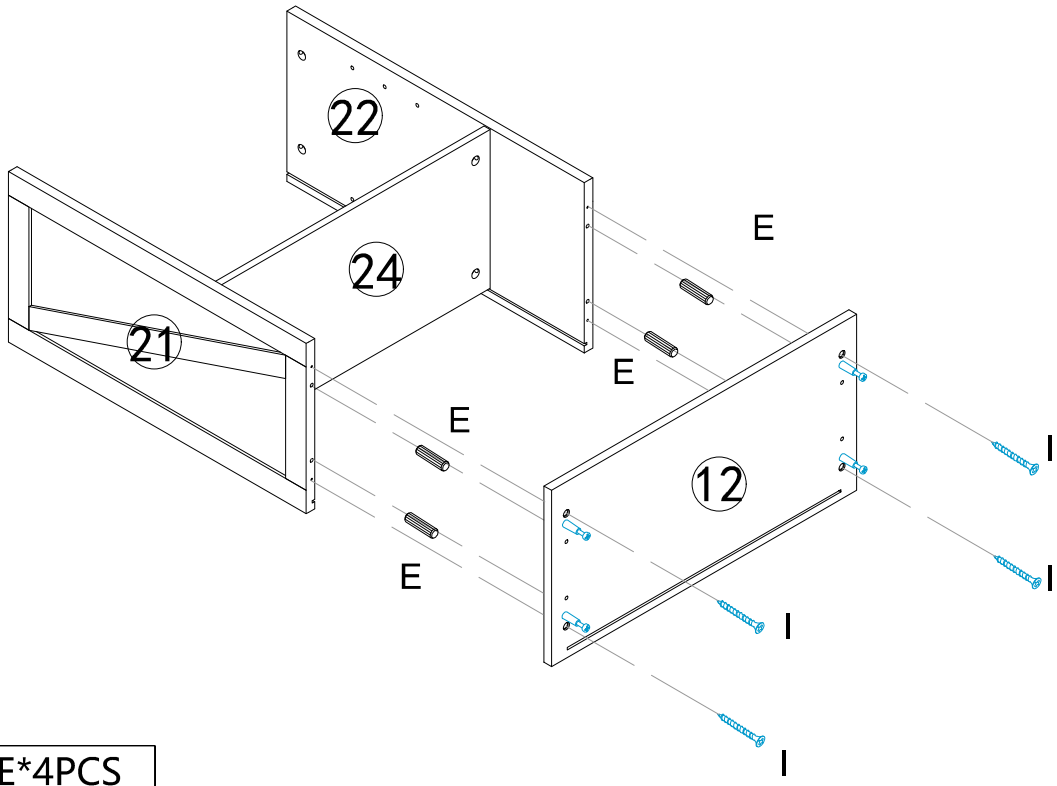

	E*4PCS
	I*4PCS

Assembly Steps

STEP 16

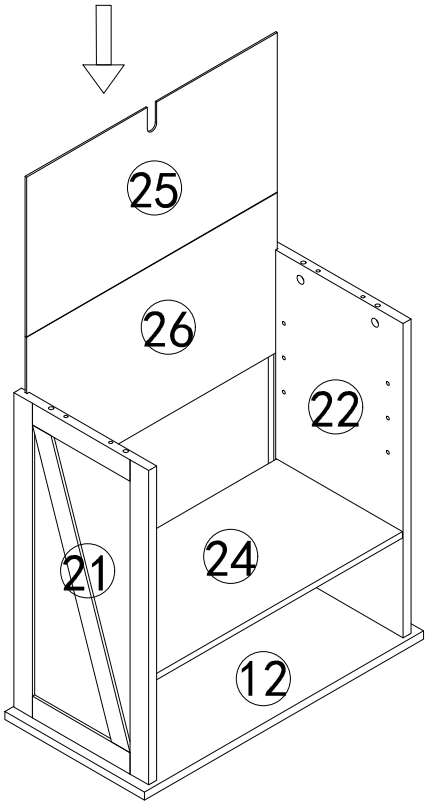

STEP 17

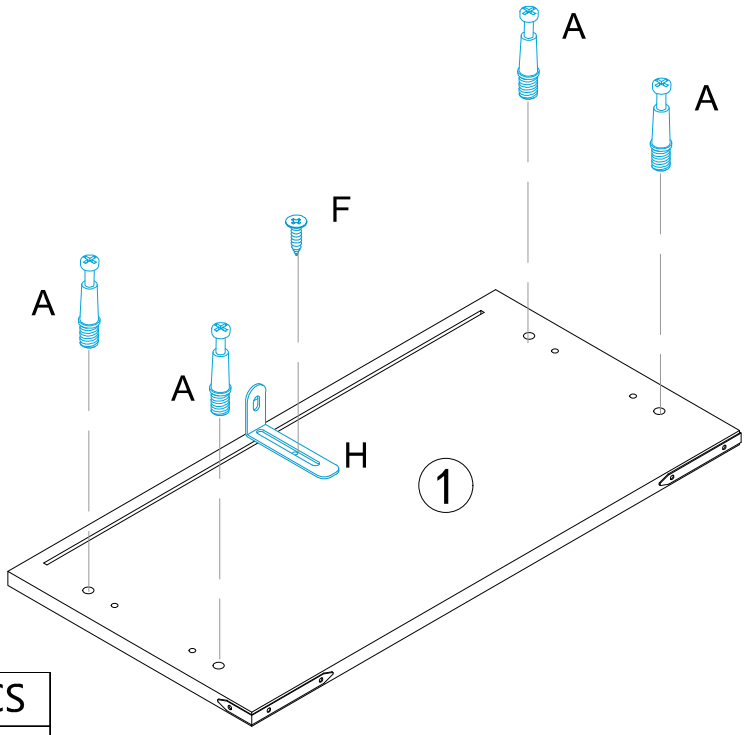

	A*4PCS
	F*1PCS
	H*1PCS

Assembly Steps

STEP 18

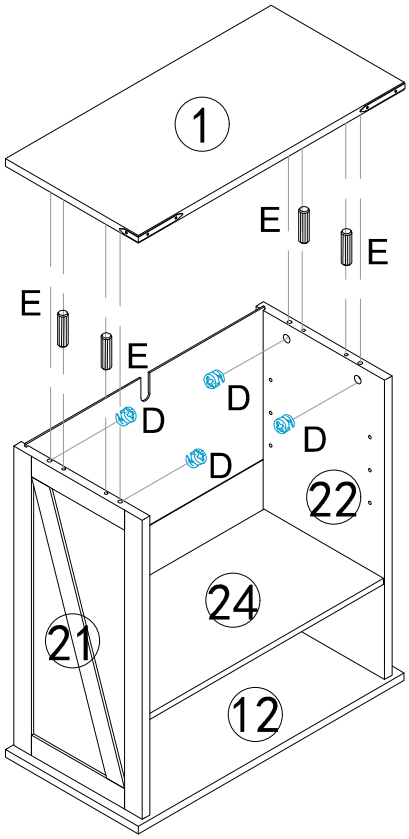

	D*4PCS
	E*4PCS

STEP 19

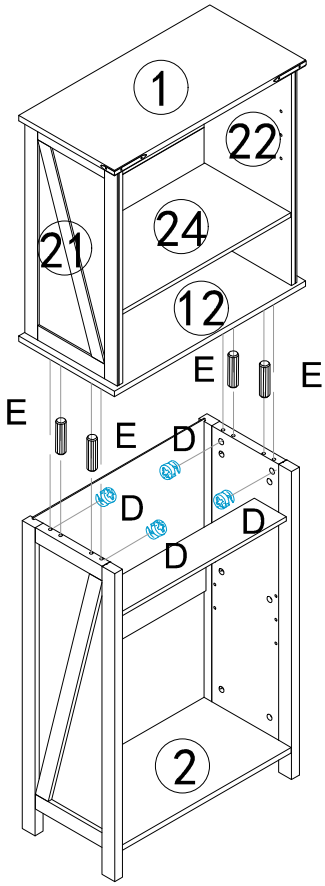

	D*4PCS
	E*4PCS

Assembly Steps

STEP 20

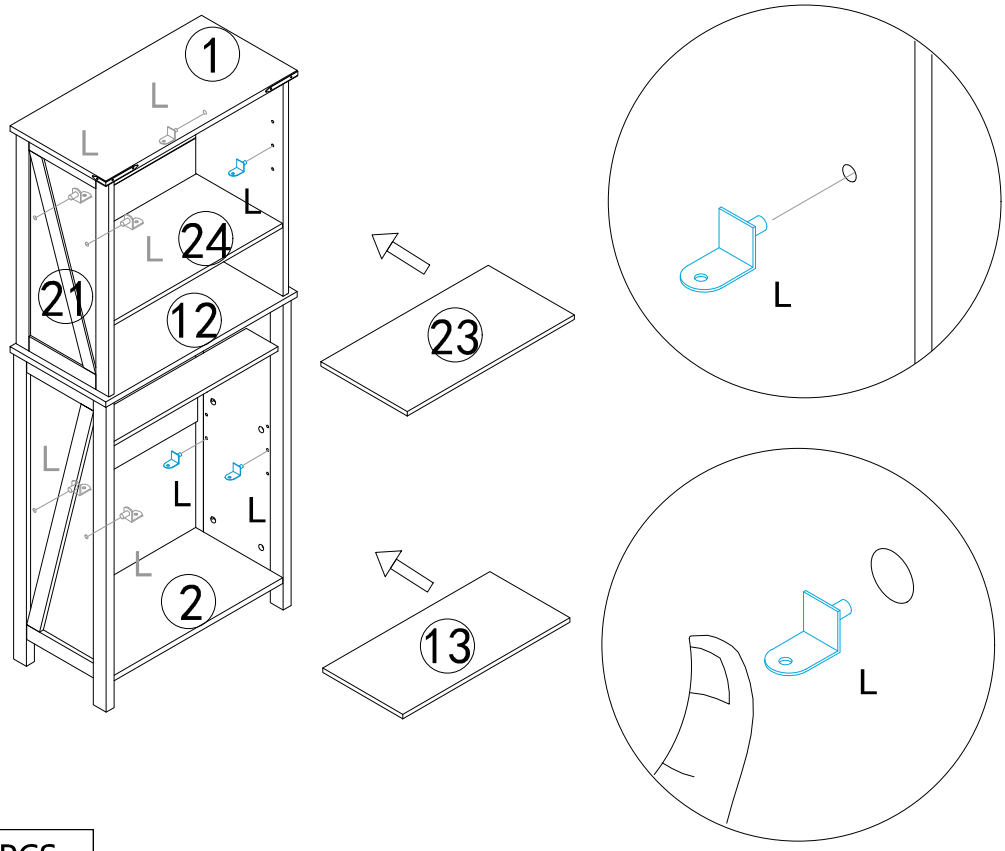

	L*8PCS

STEP 21

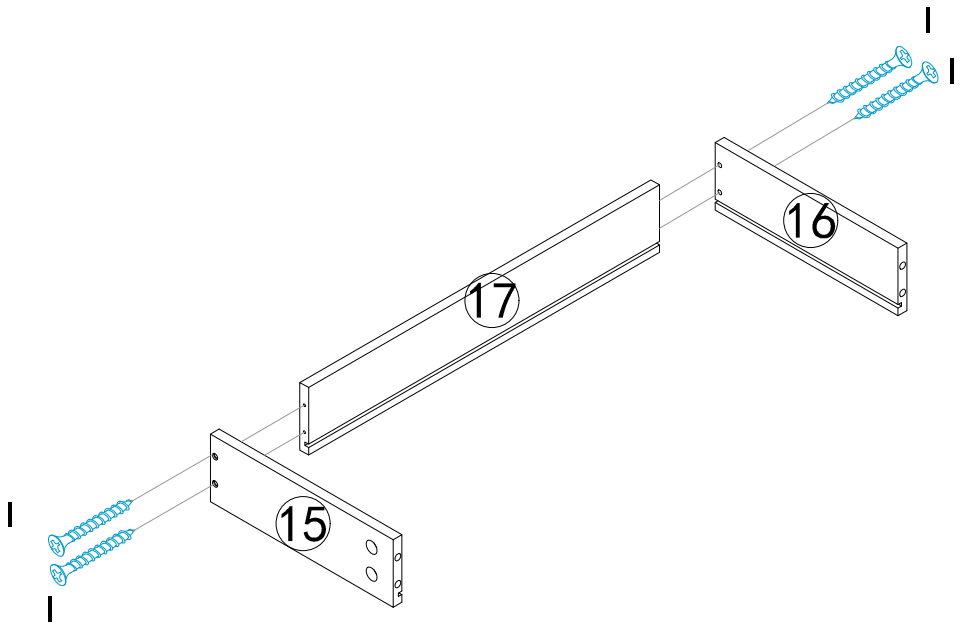

	I*4PCS

Assembly Steps

STEP 21

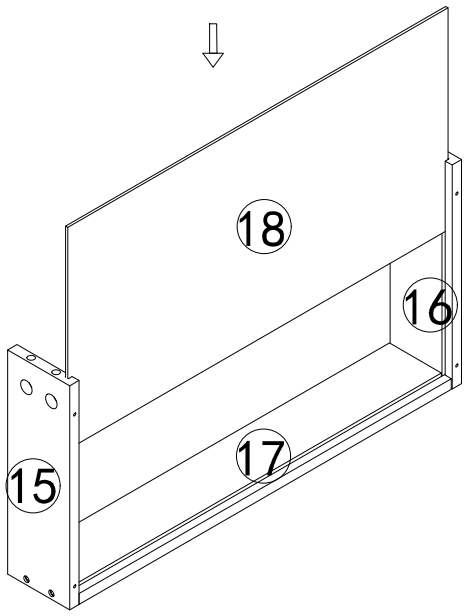

STEP 22

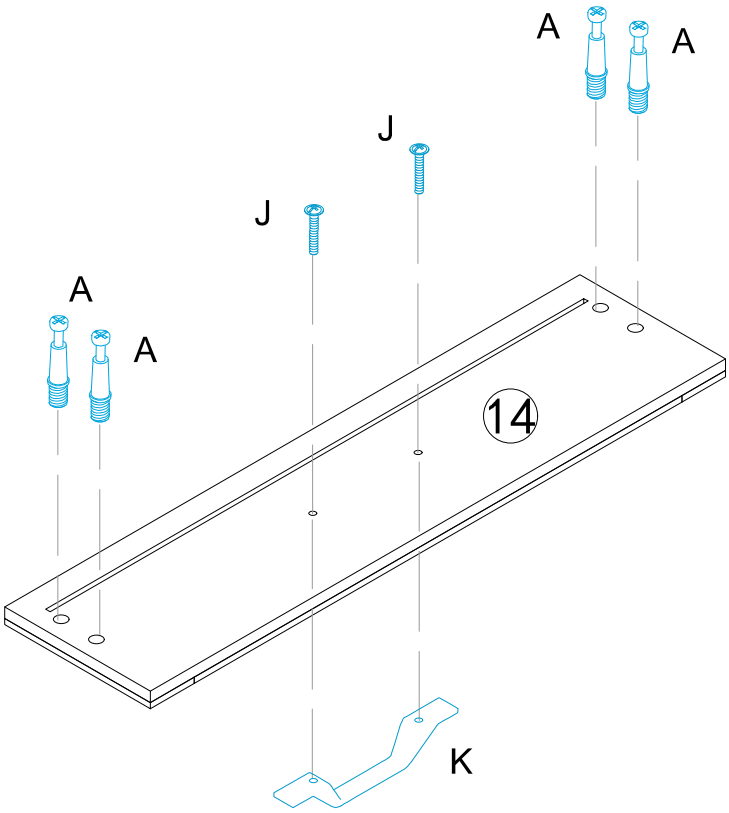

	A*4PCS
	J*2PCS
	K*1PCS

Assembly Steps

STEP 23

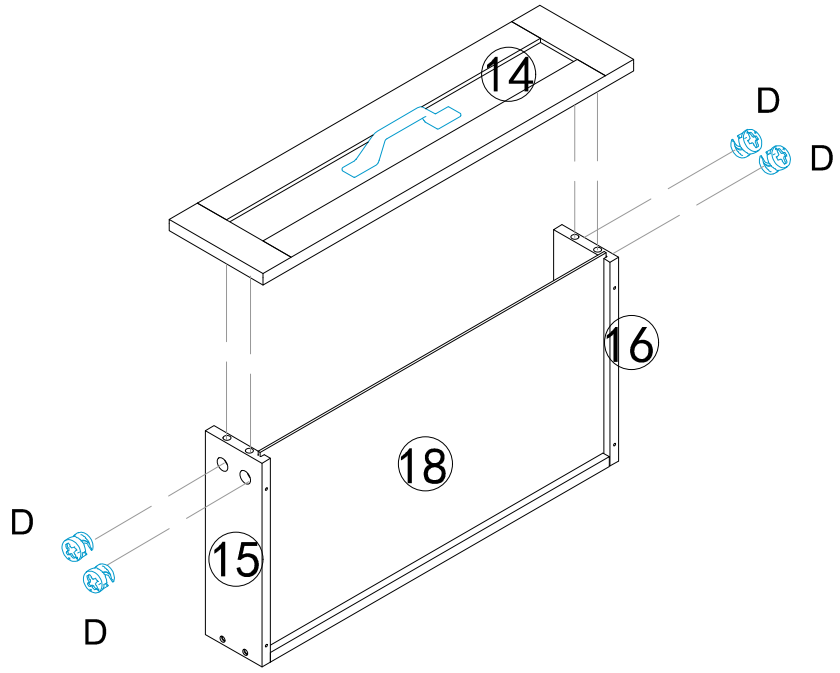

	D*4PCS

STEP 24

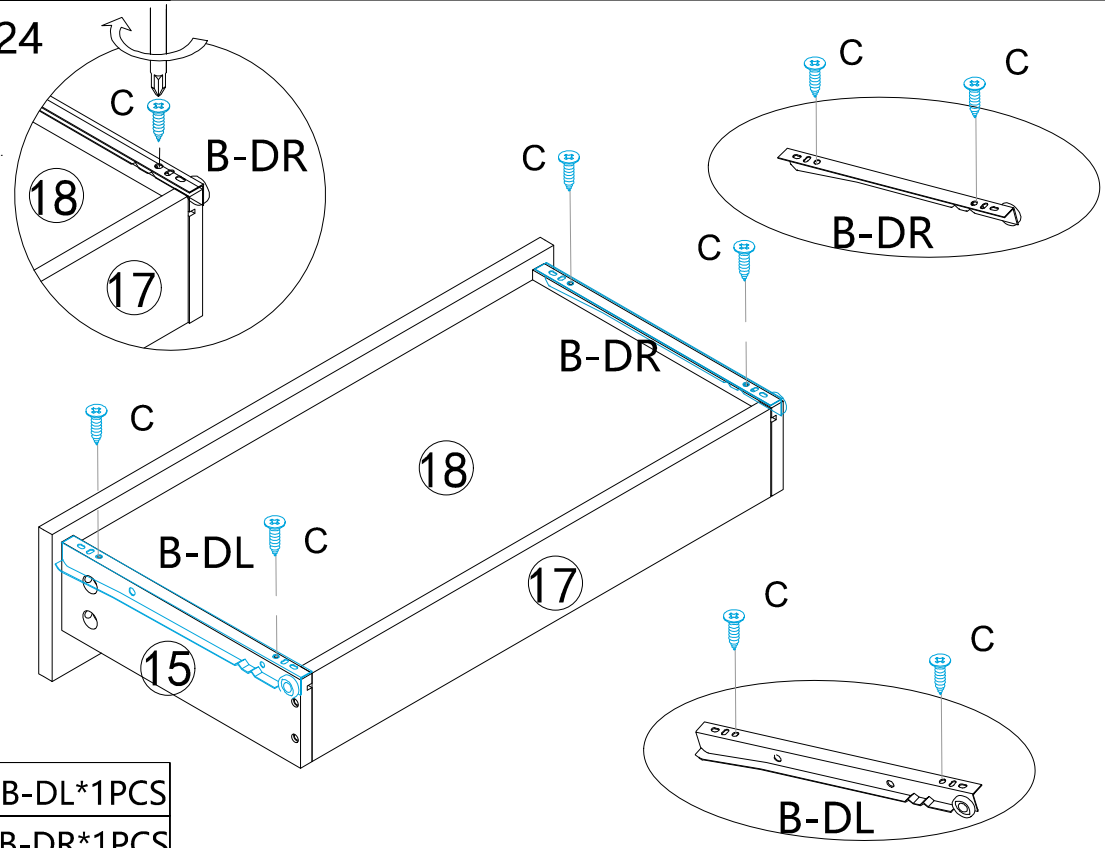

	B-DL*1PCS
	B-DR*1PCS
	C*4PCS

Assembly Steps

STEP 25

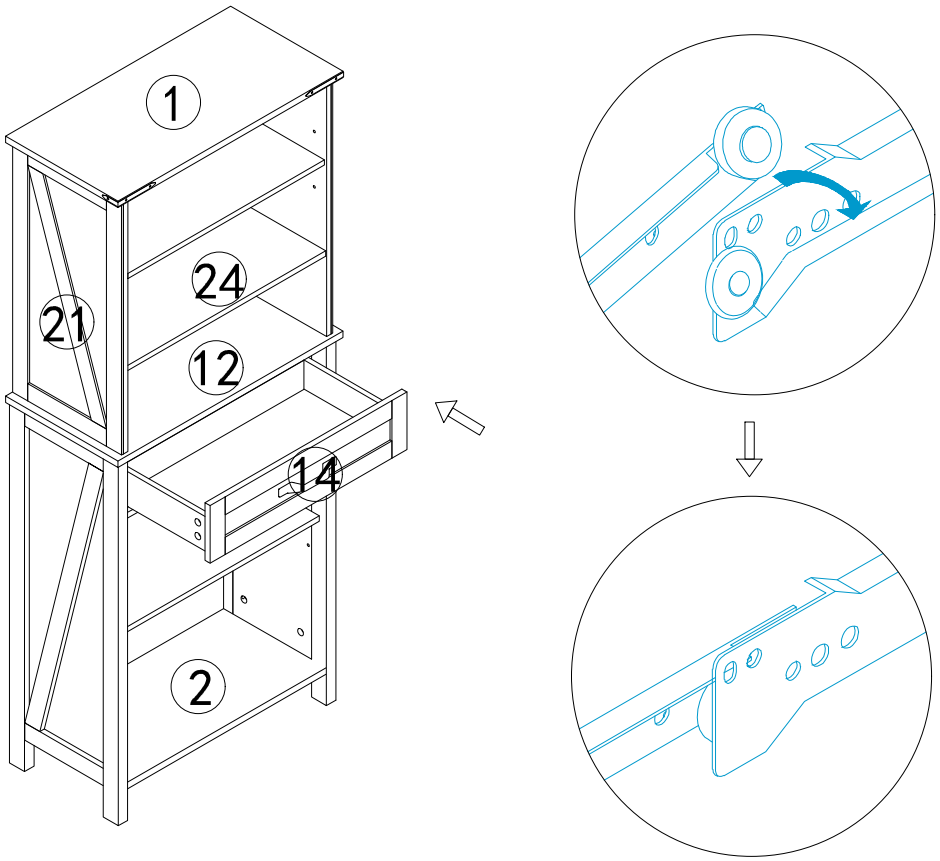

STEP 26

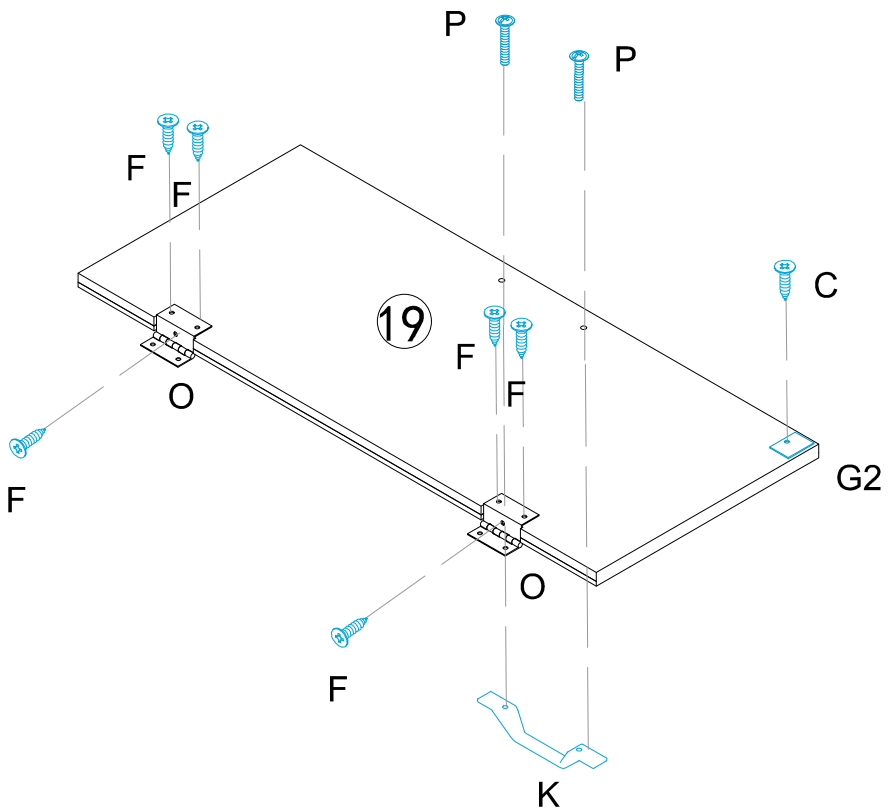

	C*1PCS
	F*6PCS
	G2*1PCS
	K*1PCS
	O*2PCS
	P*2PCS

Assembly Steps

STEP 27

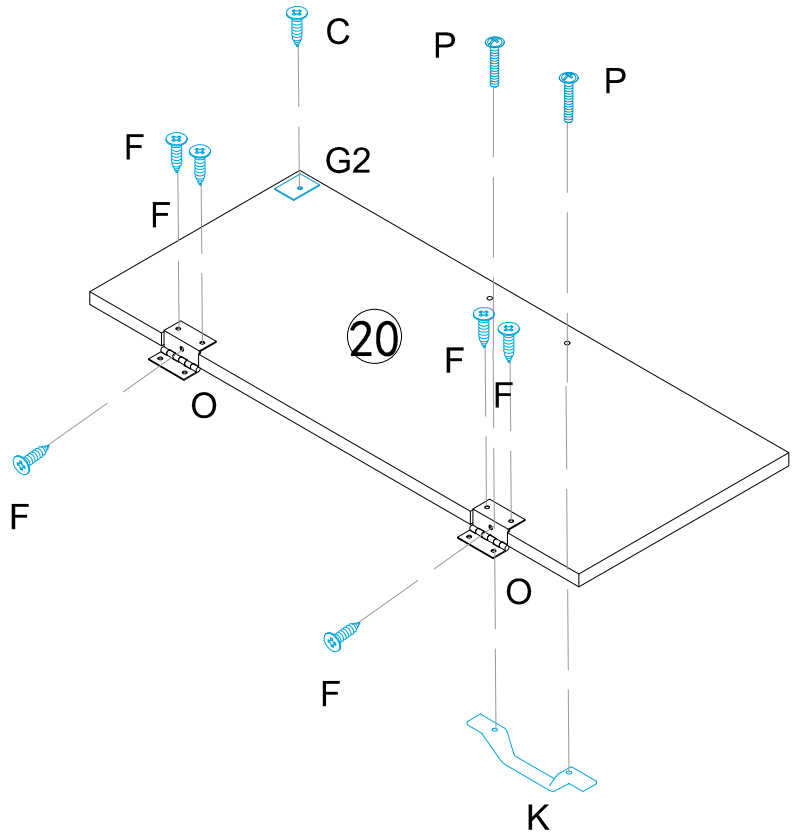

	C*1PCS
	F*6PCS
	G2*1PCS
	K*1PCS
	O*2PCS
	P*2PCS

STEP 28

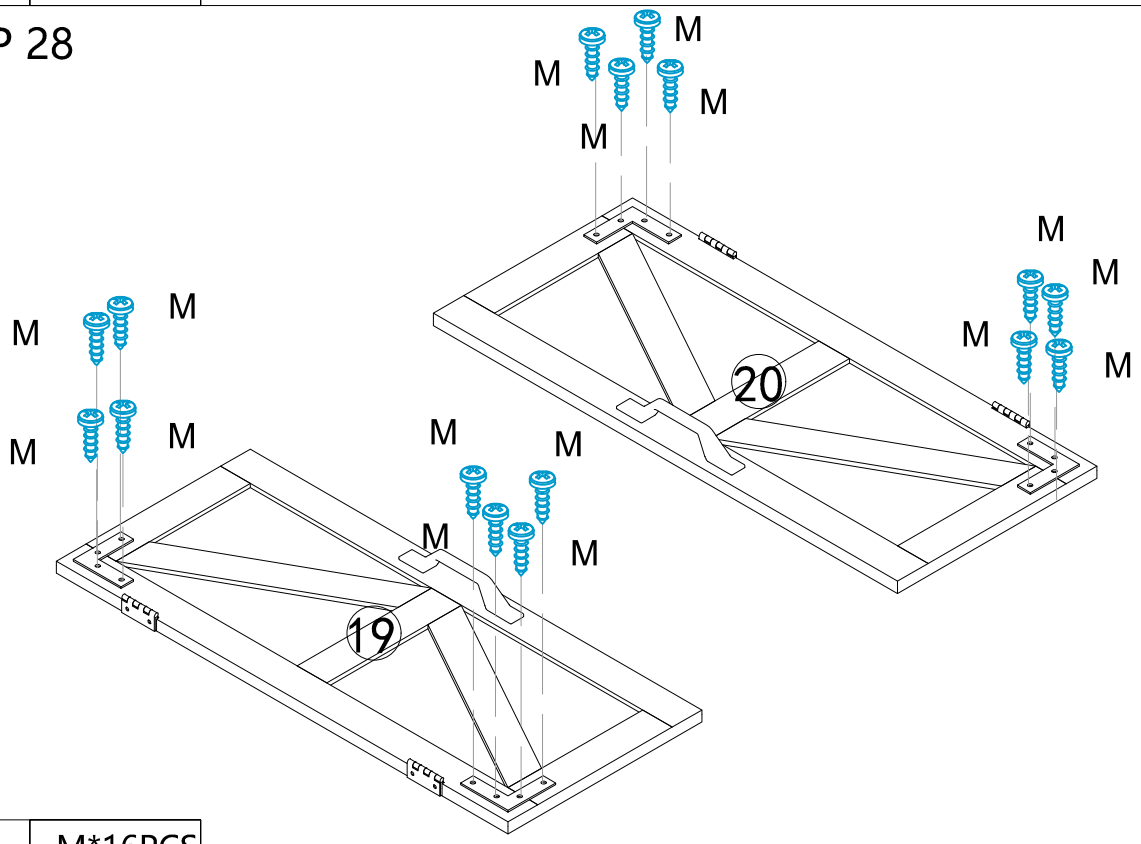

	M*16PCS
	N*4PCS

Assembly Steps

STEP 29

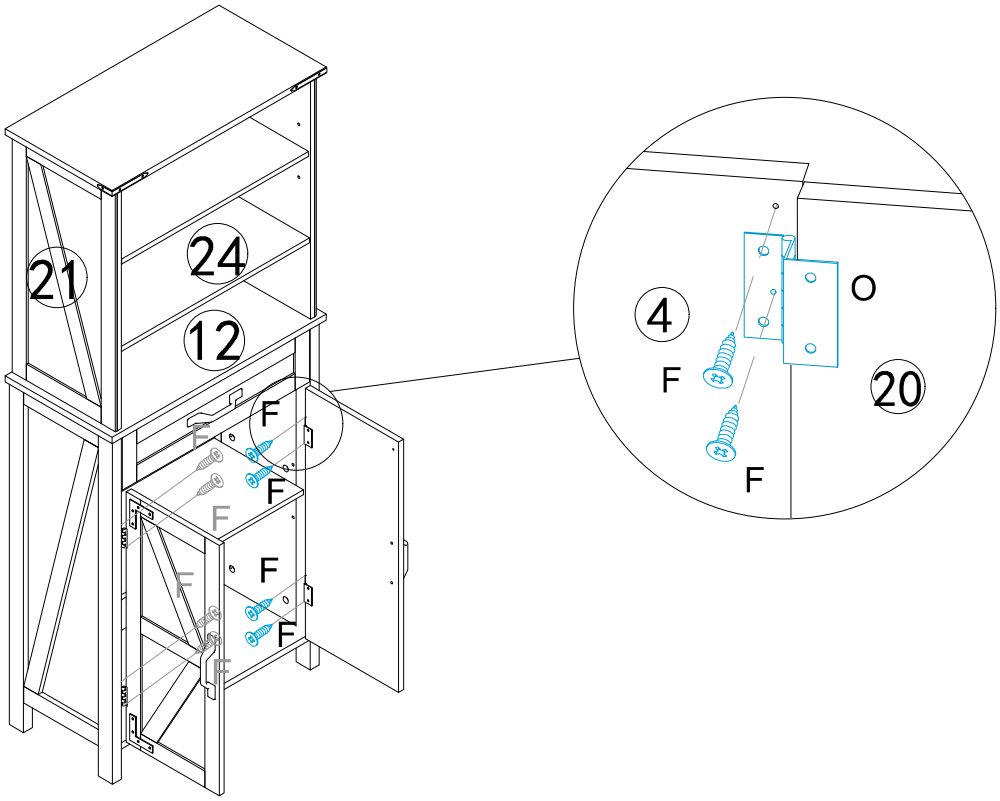

	F*8PCS

STEP 30

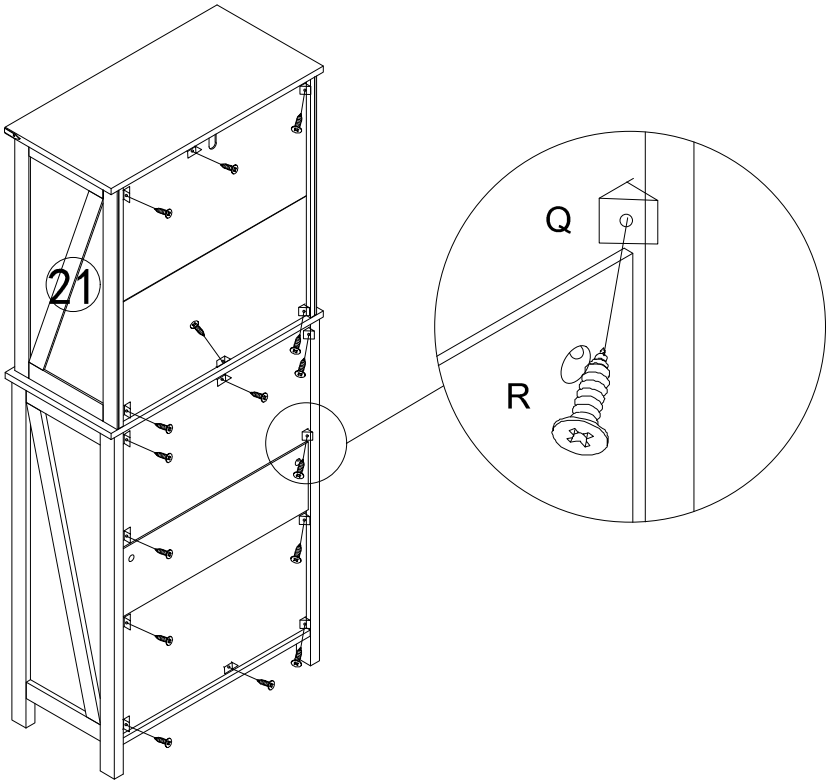

	Q*16PCS
	R*16PCS

Assembly Steps

STEP 31

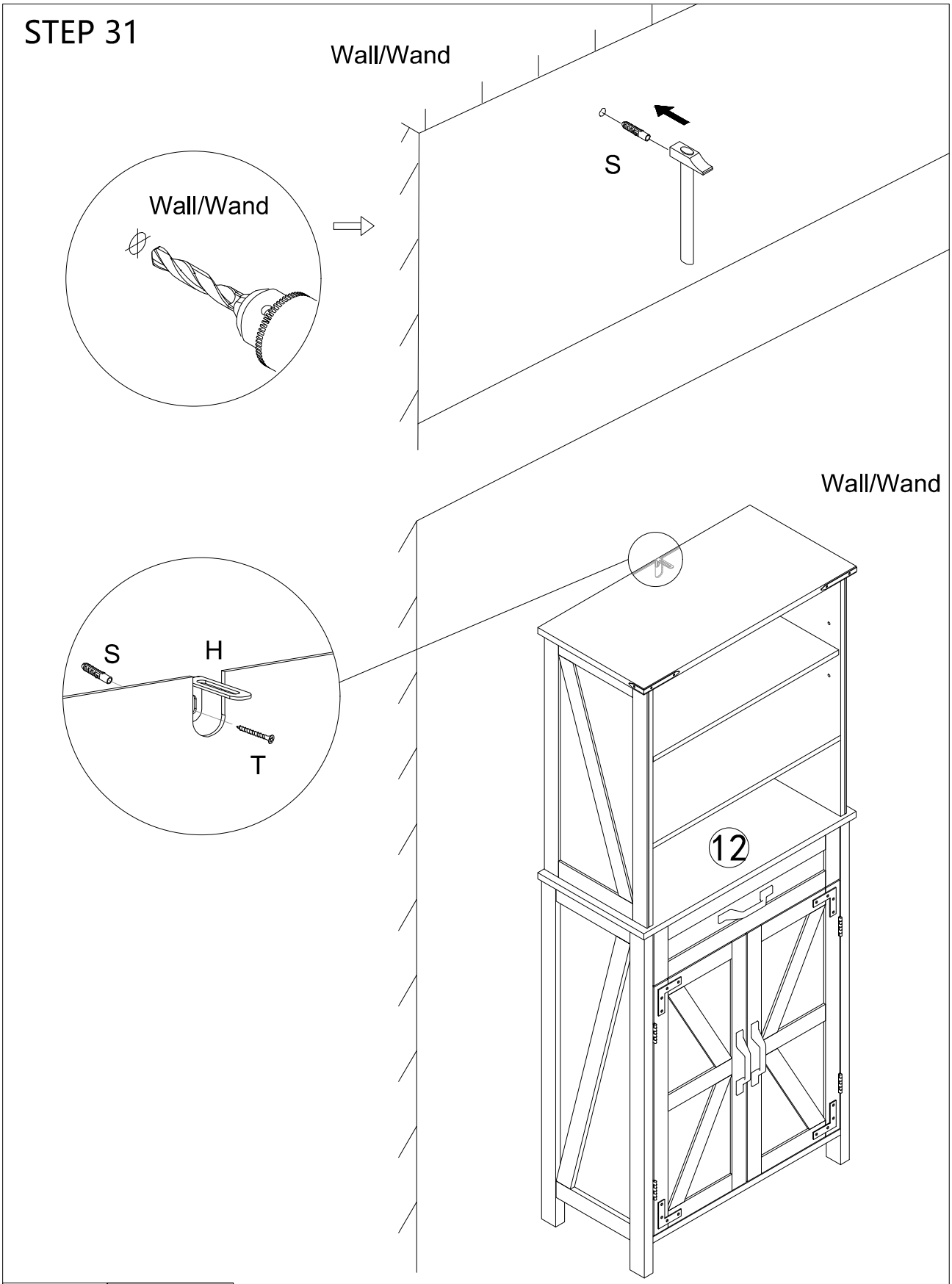

	S*1PCS
	T*1PCS

Installation Completed