ASSEMBLY INSTRUCTION

QUEEN BED WITH UPH HB

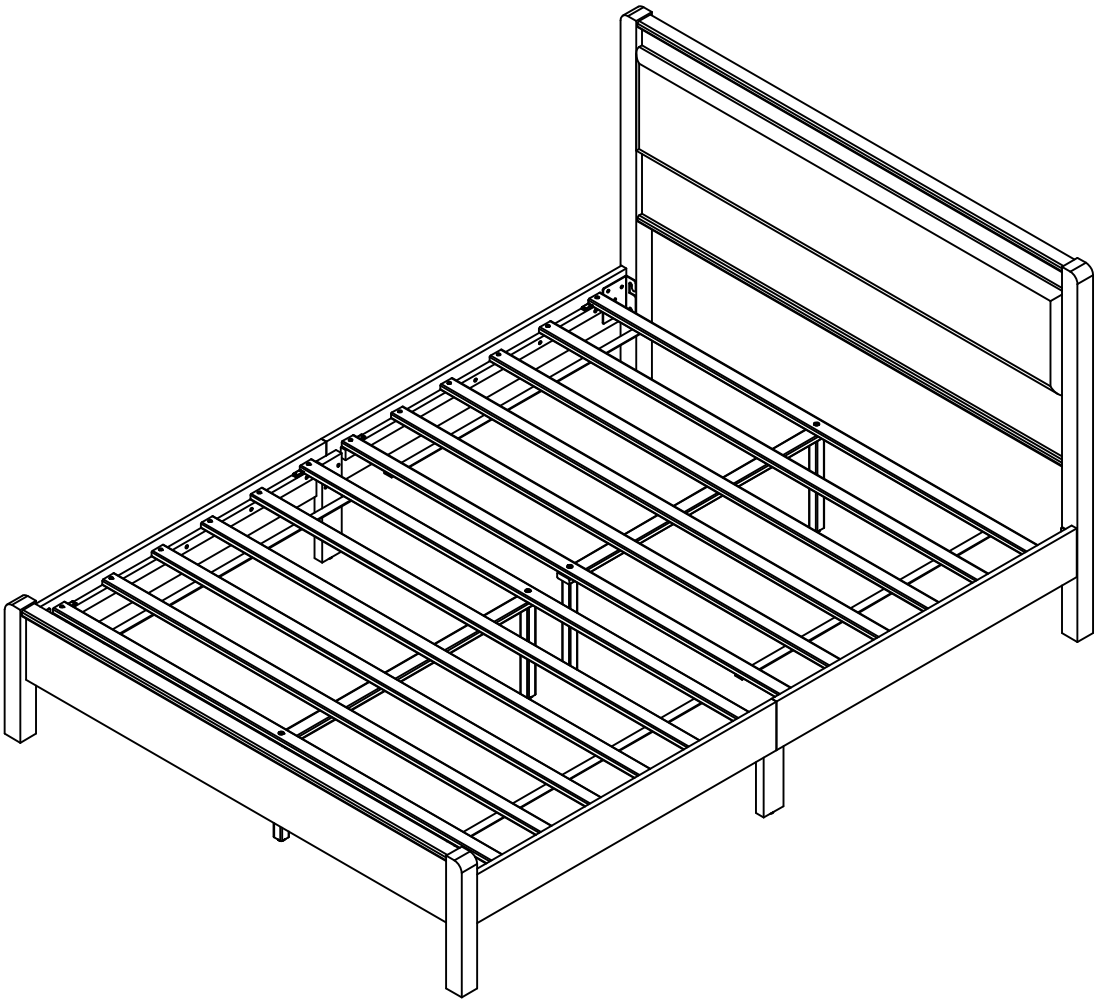

MT33003

Detail View

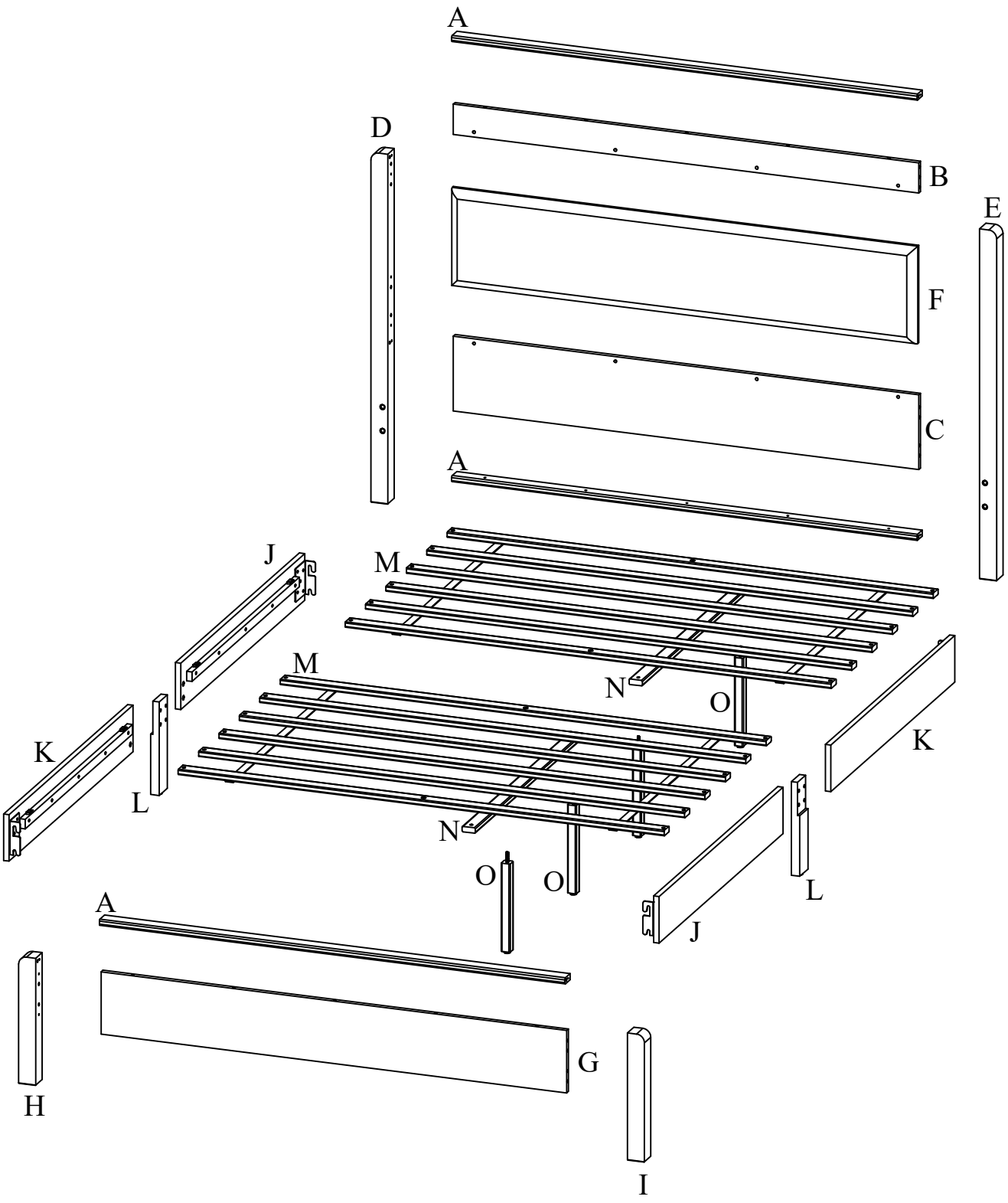

Part List

A FB / HB Top & Btm Rail - 3 pcs	B HB Top panel - 1 pc	C 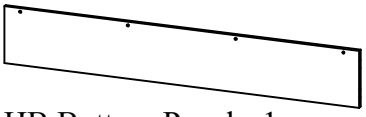 HB Bottom Panel - 1 pc
D 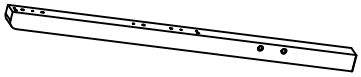 HB Post L - 1 pc	E HB Post R - 1 pc	F 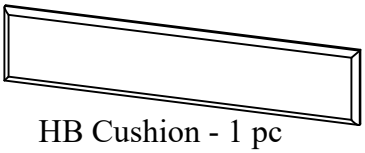 HB Cushion - 1 pc
G 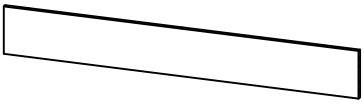 FB Panel - 1 pc	H 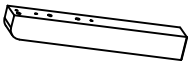 FB Post L - 1 pc	I FB Post R - 1 pc
J Side Rail 1 - 2 pcs	K Side Rail 2 - 2 pcs	L Center Leg - 2 pcs
M Slat Rolls - 2 pcs	N Center Slat - 2 pcs	O Vertical Leg - 4 pcs

Hardware List

1	2 15 x 11.5mm	3 Ø8 x 30mm
Minifix Bolts (25 pcs)	Minifix Cam (25 pcs)	Wood Dowel (18 pcs)
4 M6 x 30mm	5 M6 x 35mm	6 M6
JCBC (8 pcs)	JCBC (8 pcs)	Spring Washer (16 pcs)
7 M6 x 13mm	8 M8 x 20mm	9 M8 x 18mm
Flat Washer (16 pcs)	JCBB (8 pcs)	Flat Washer (8 pcs)
10 M4 x 30mm	11 M4 x 38mm	12 M4
PH Screw (24 pcs)	PH Screw (6 pcs)	Allen Key + Screw Driver (1 pc)
	13 M5	
	Allen Key (1 pc)	

ASSEMBLY TOOLS REQUIRED (NOT INCLUDED)

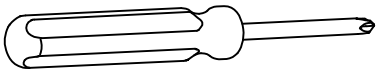

PLEASE BE CAREFUL DO NOT DAMAGE THE HOLE POSITION WHEN YOU USE POWER TOOLS !

STEP 1:

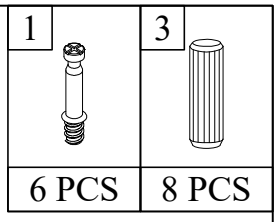

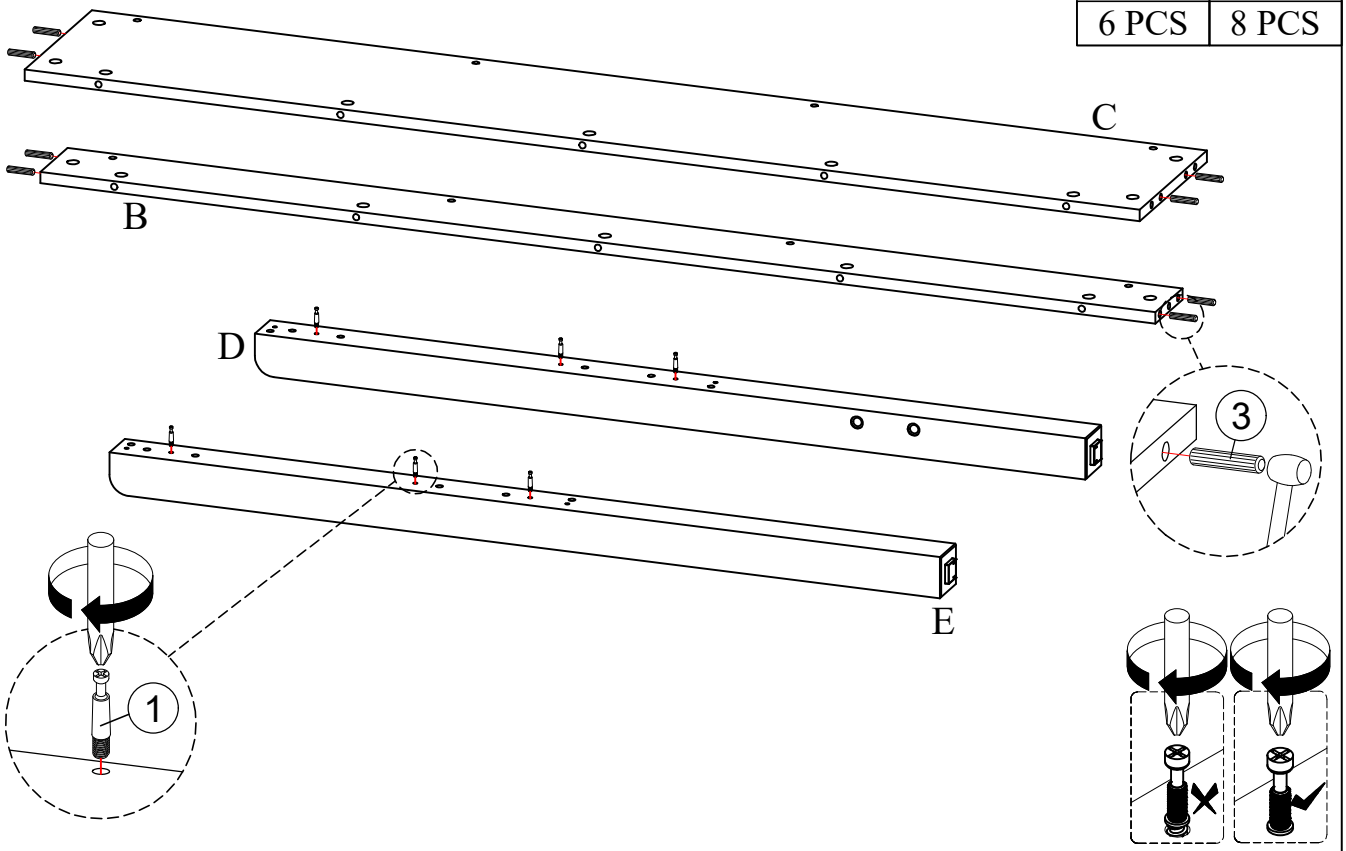

STEP 2:

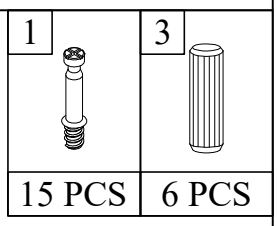

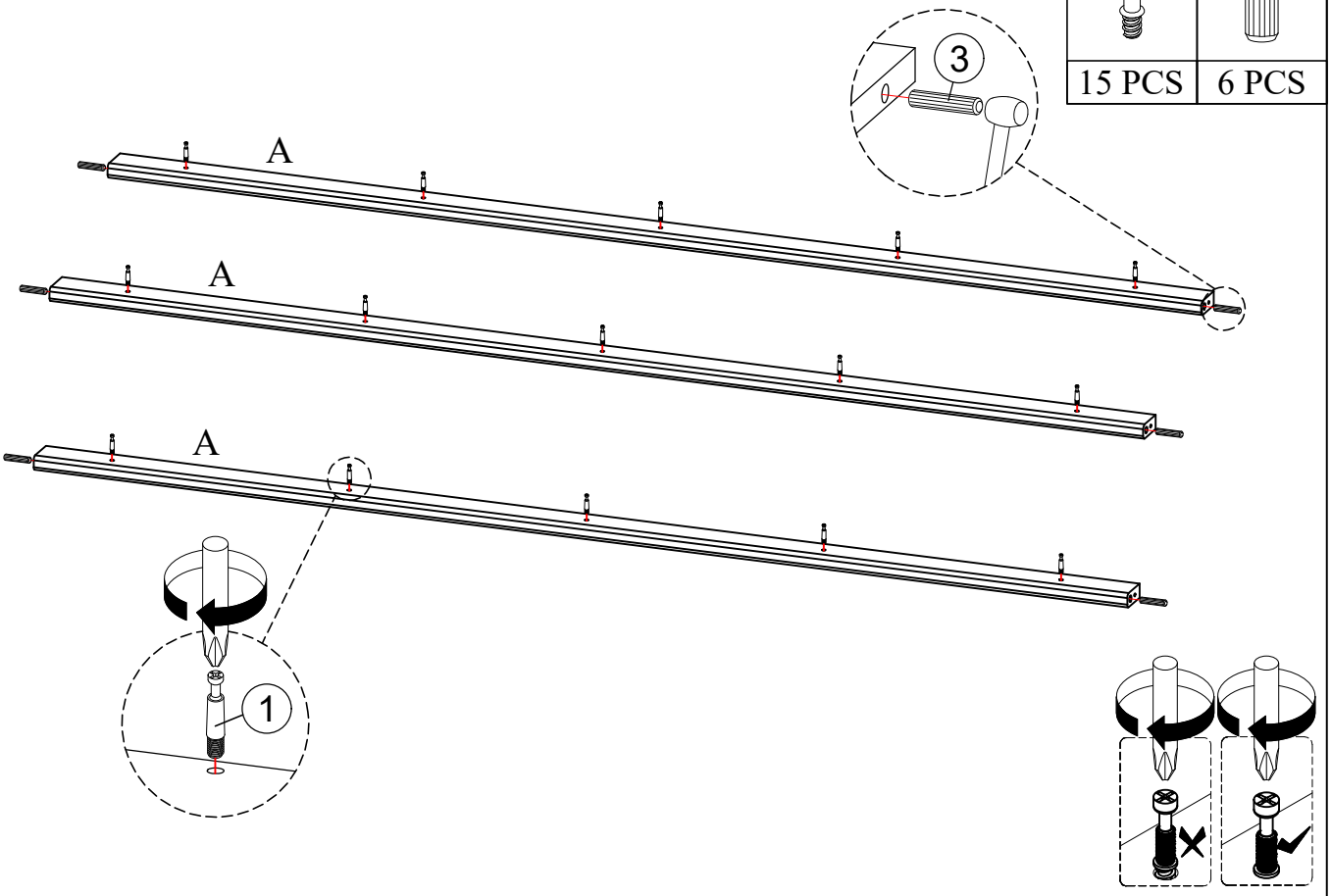

STEP 3:

2

5 PCS

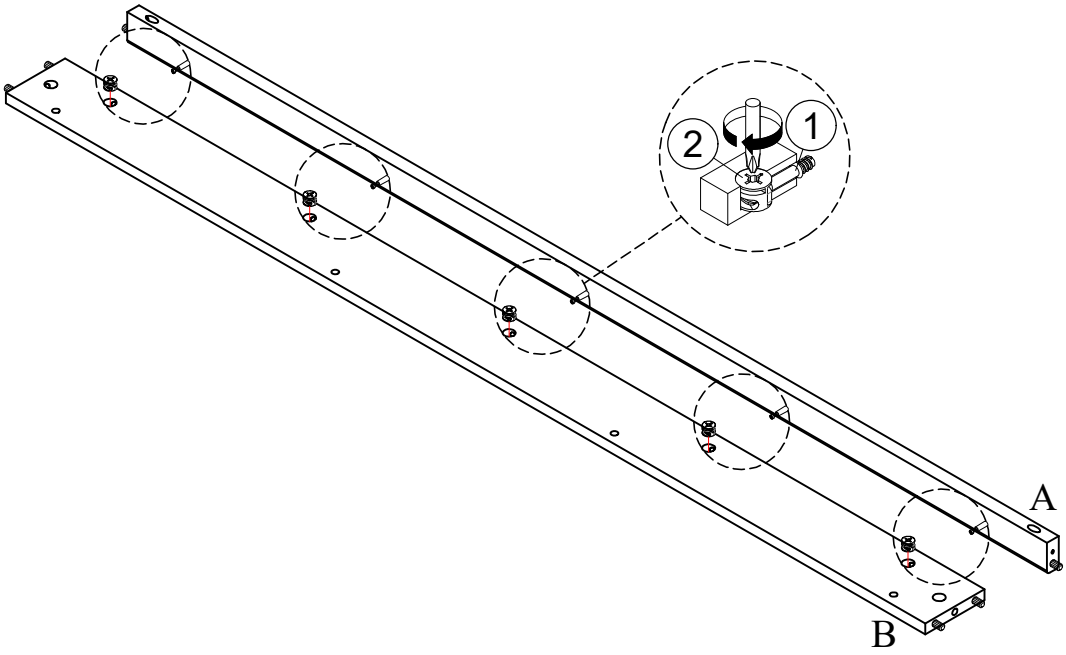

STEP 4:

2

5 PCS

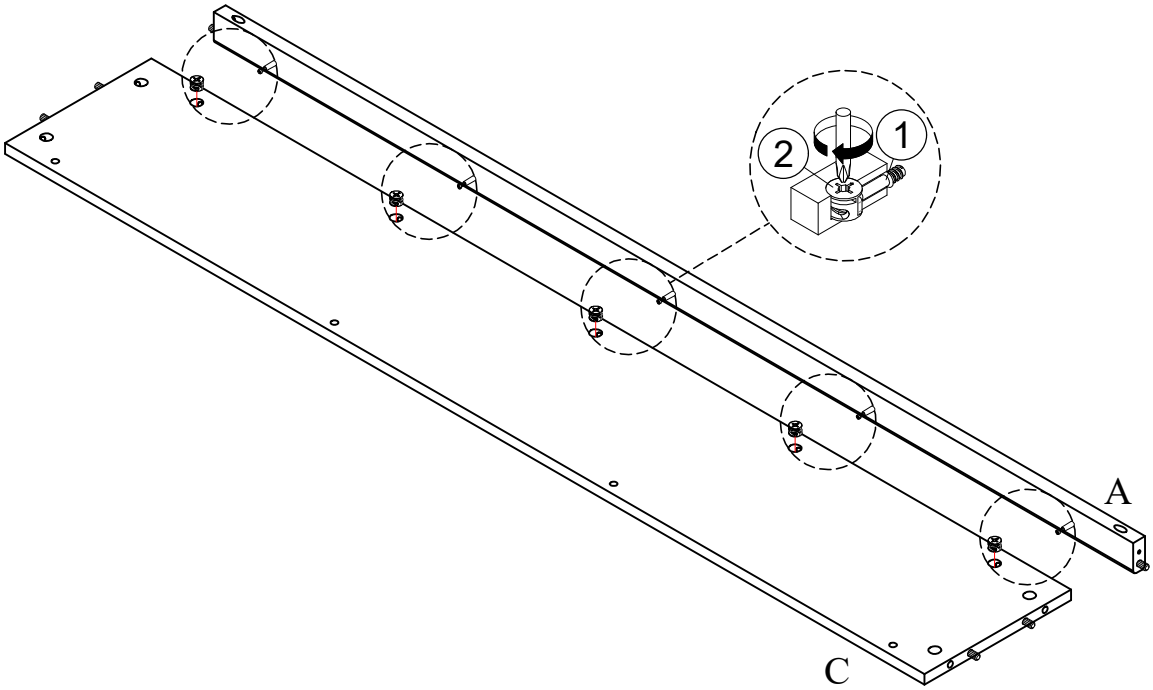

STEP 5:

2

6 PCS

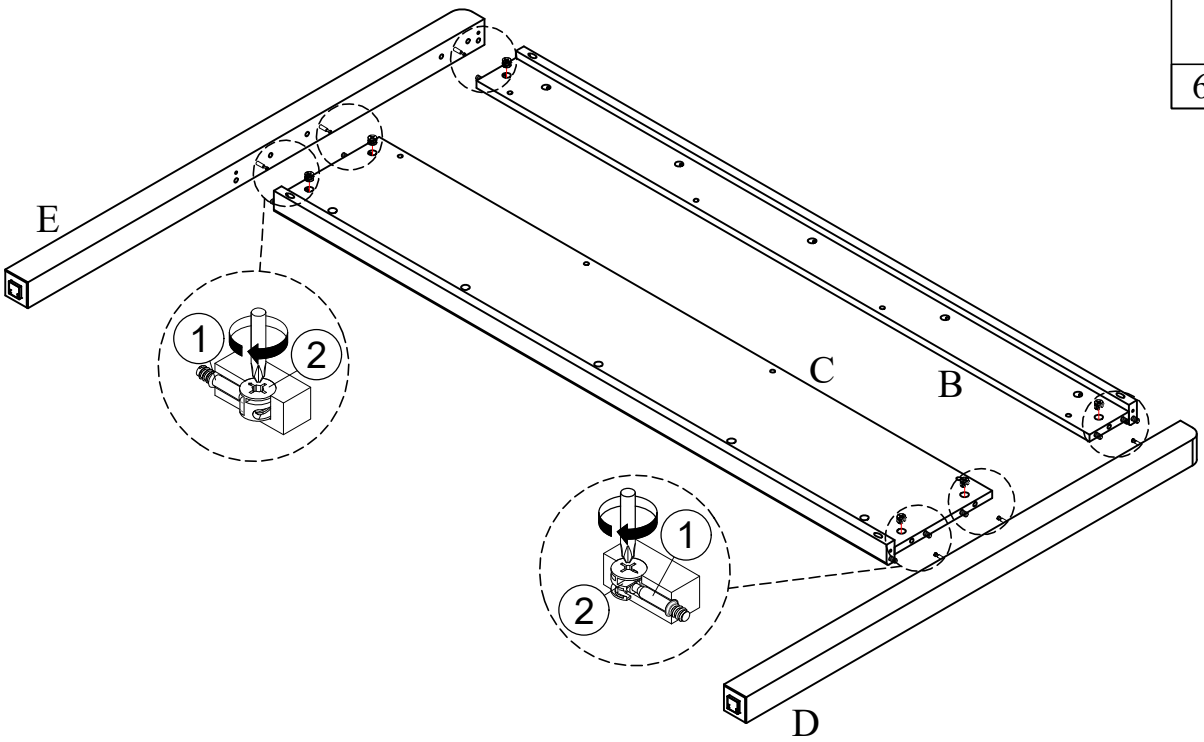

STEP 6:

11

4 PCS

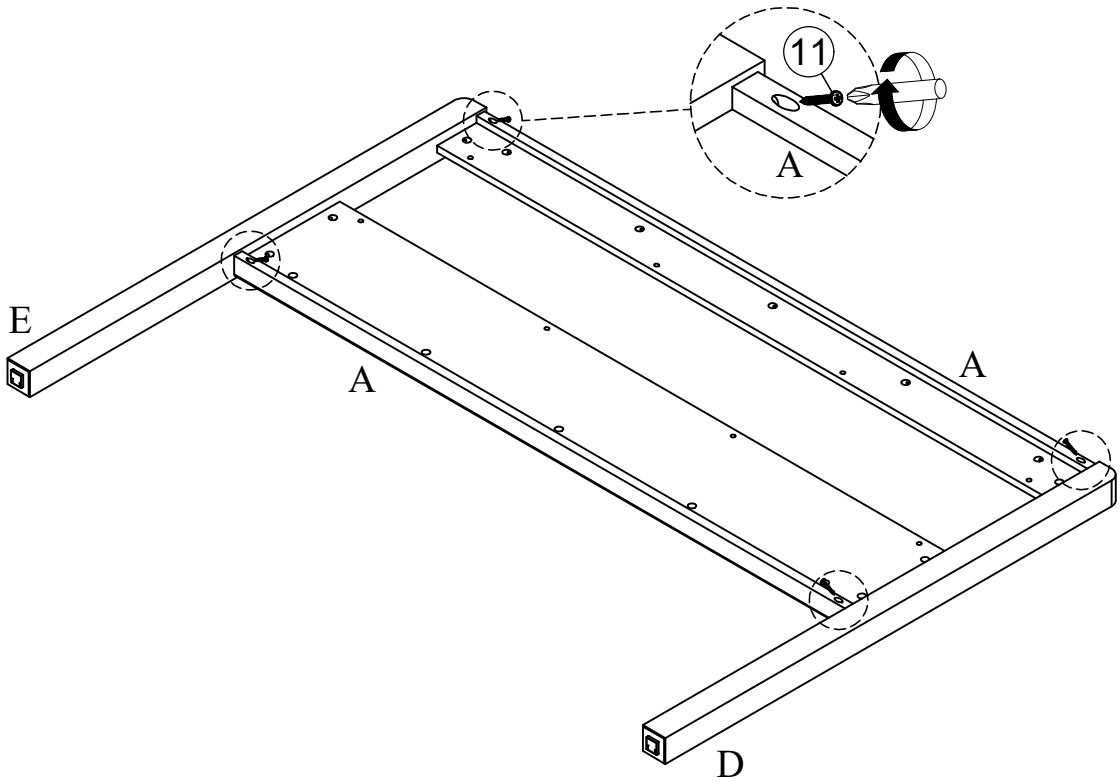

STEP 7:

4	6	7	12
8 PCS	8 PCS	8 PCS	1 PC

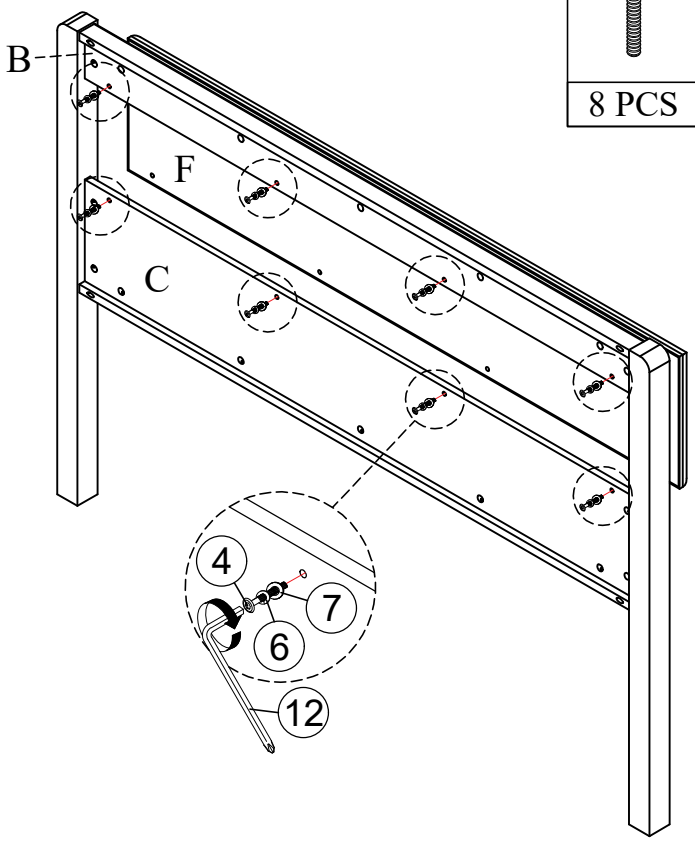

STEP 8:

1	3
4 PCS	4 PCS

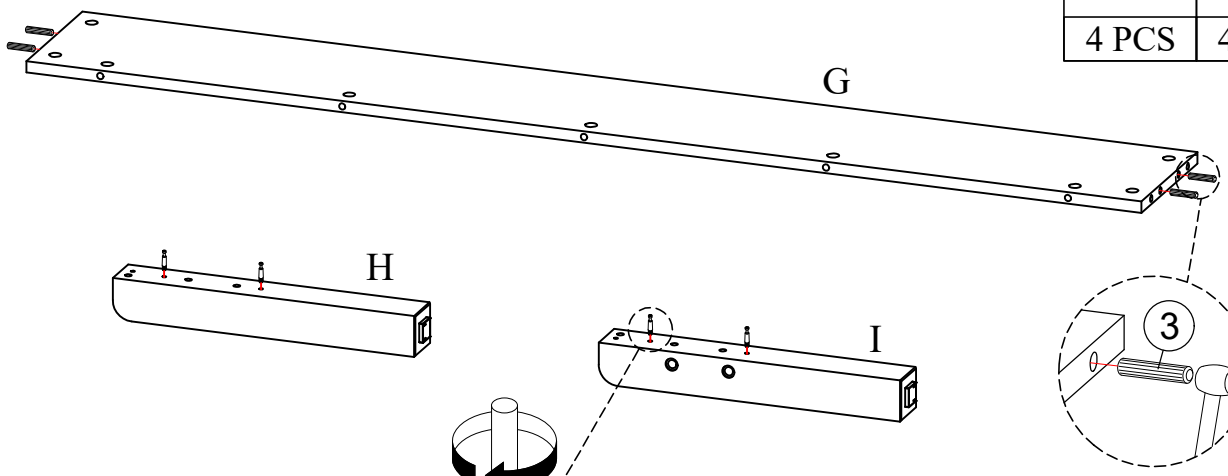

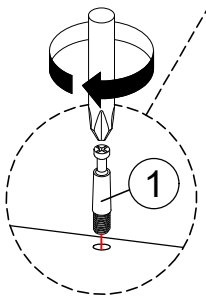

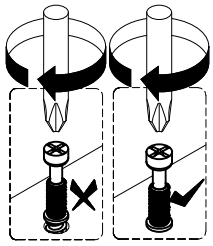

STEP 9:

2

5 PCS

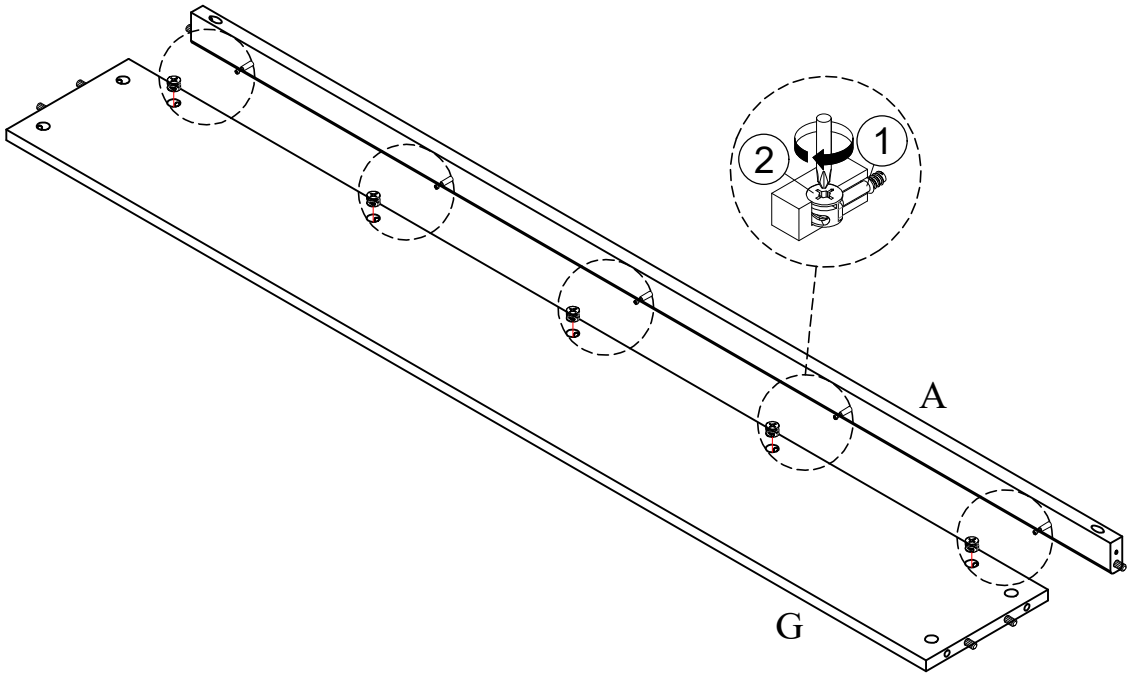

STEP 10:

2

4 PCS

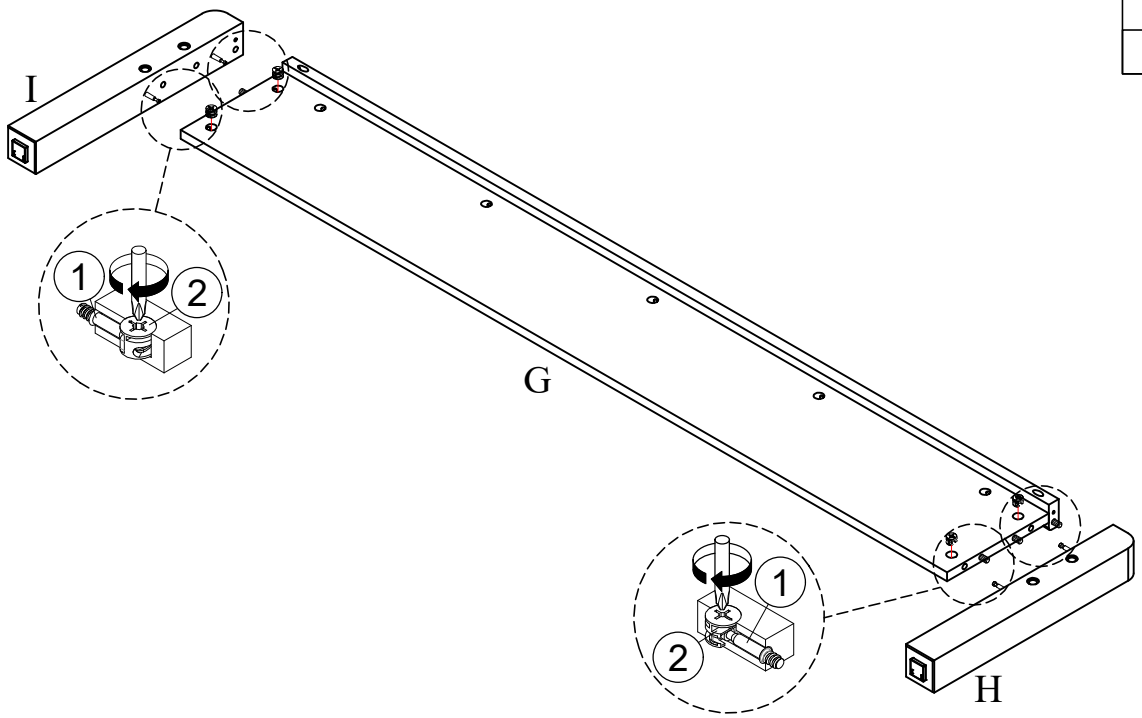

STEP 11:

11
2 PCS

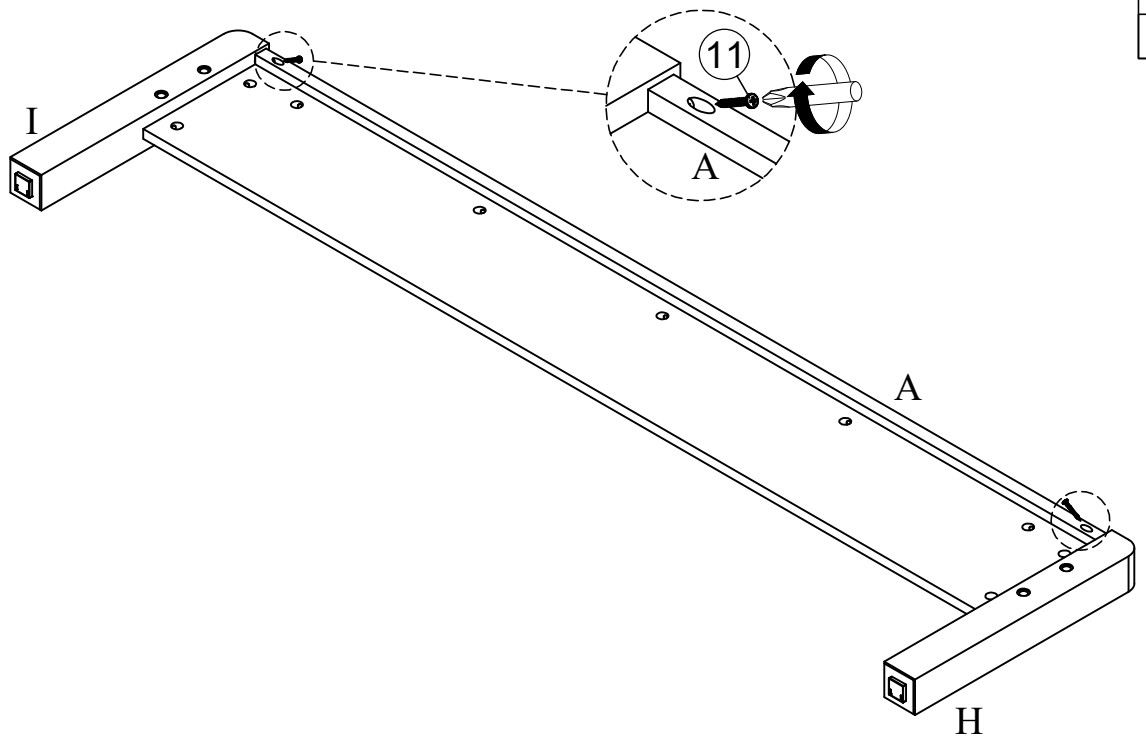

STEP 12:

5	6	7	12
8 PCS	8 PCS	8 PCS	1 PC

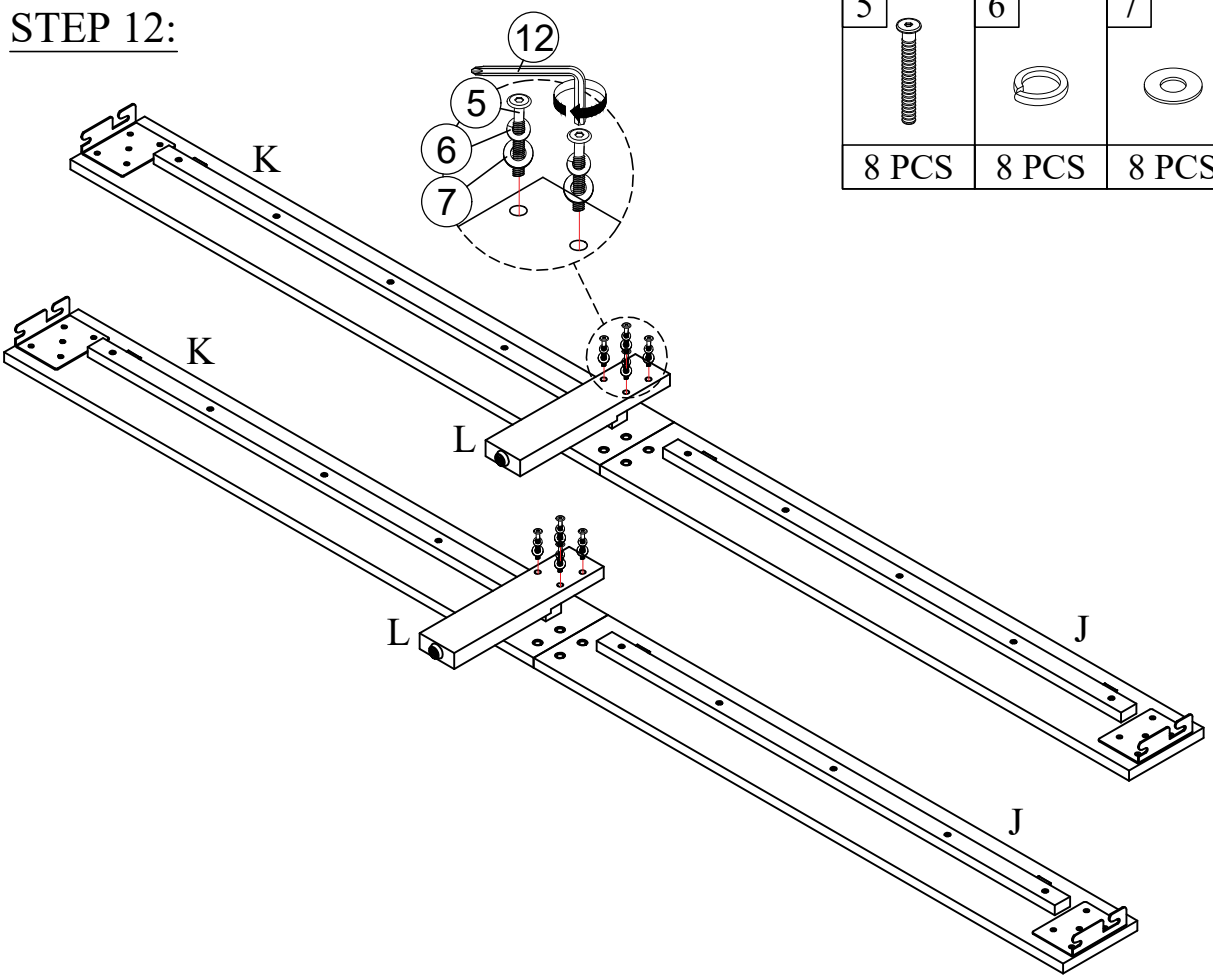

STEP 13:

8	9	13
4 PCS	4 PCS	1 PC

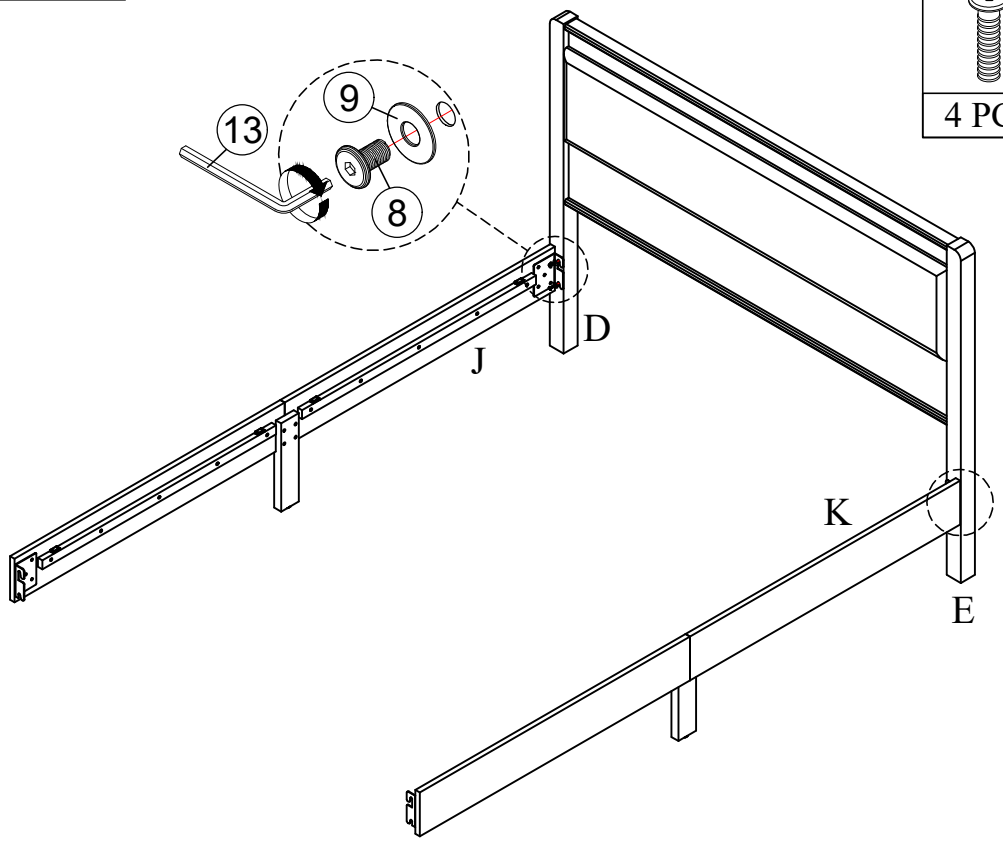

STEP 14:

8	9	13
4 PCS	4 PCS	1 PC

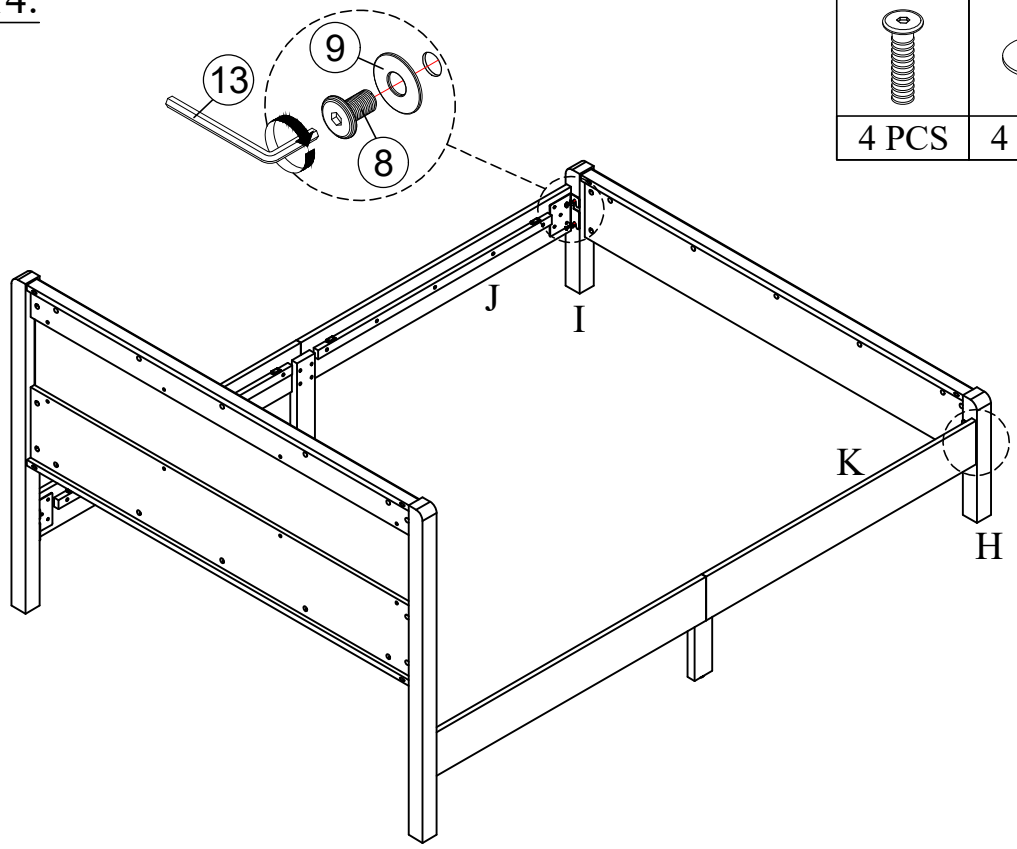

STEP 15:

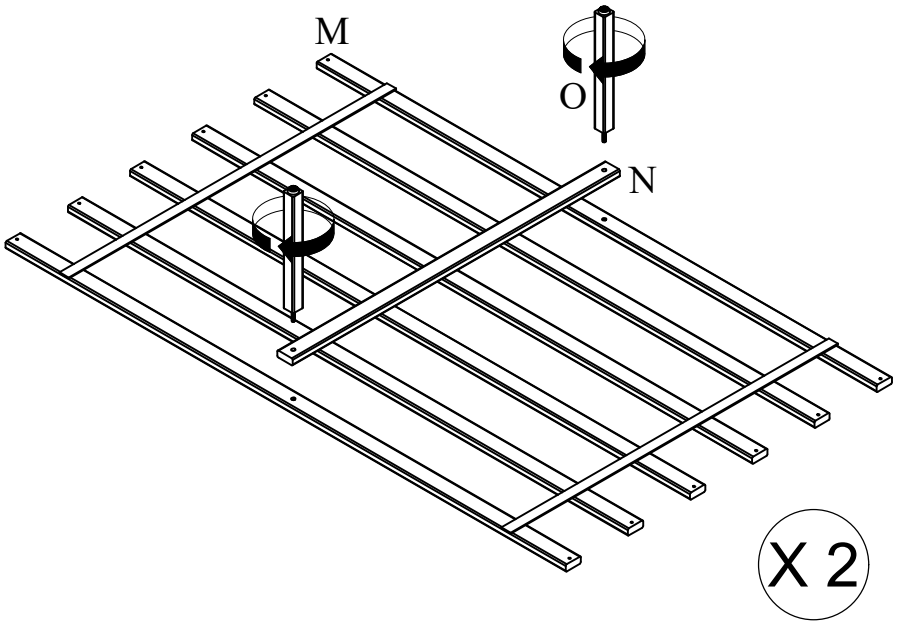

STEP 16:

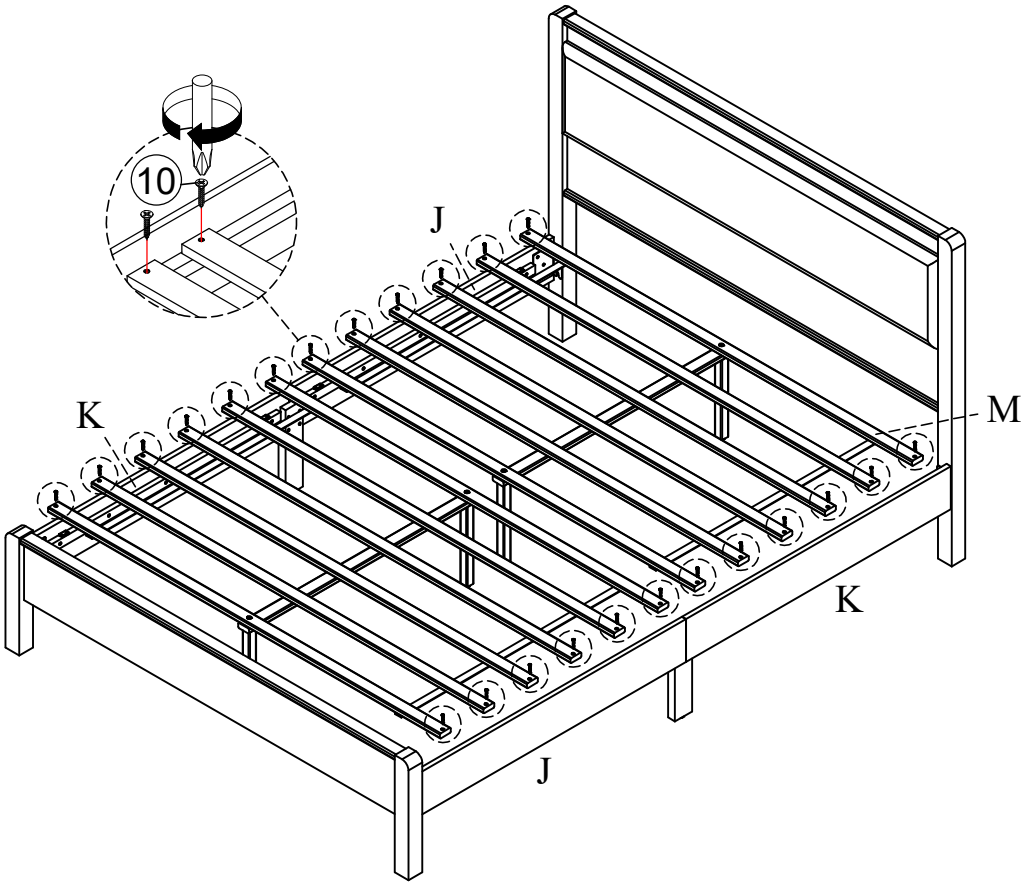

10
24 PCS