INSTRUCTION MANUAL

MFLHKTS022/MFLHKTS022 TV Cabinet

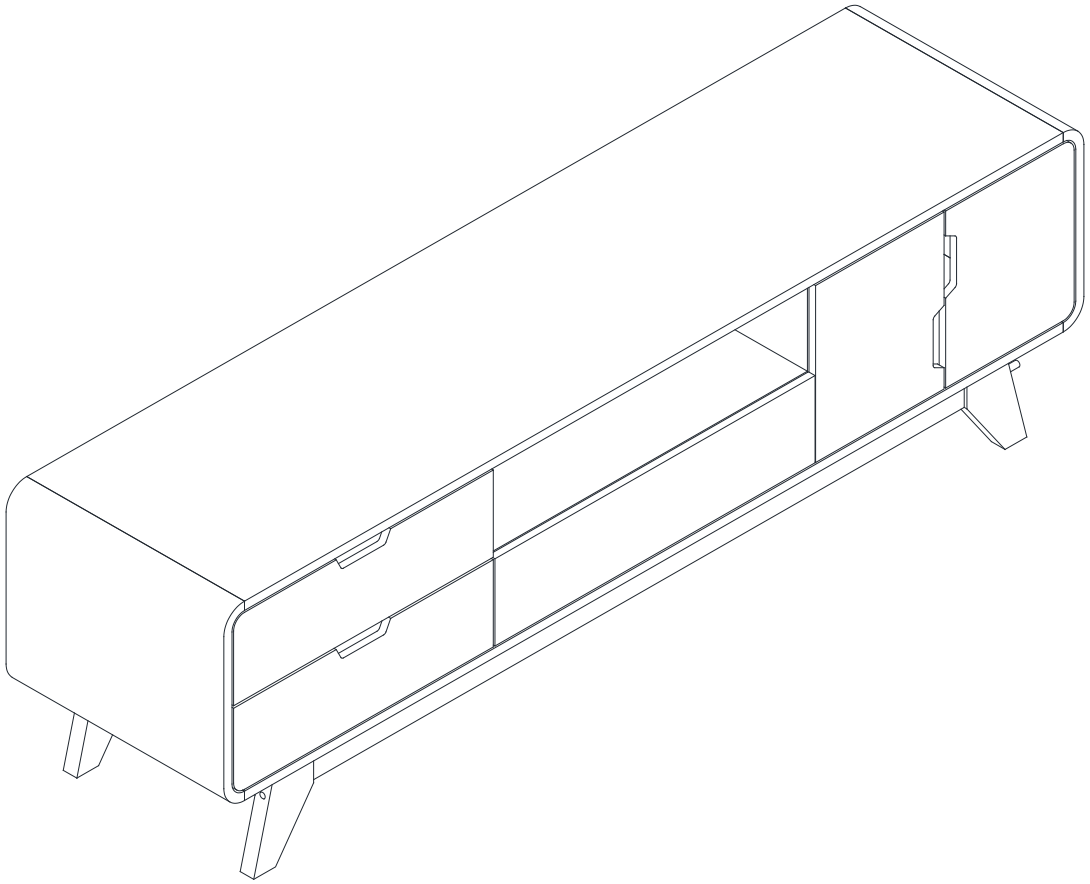

wolfthontech1@gmail.com

Please choose SMS or email as your first choice for communicating with us.

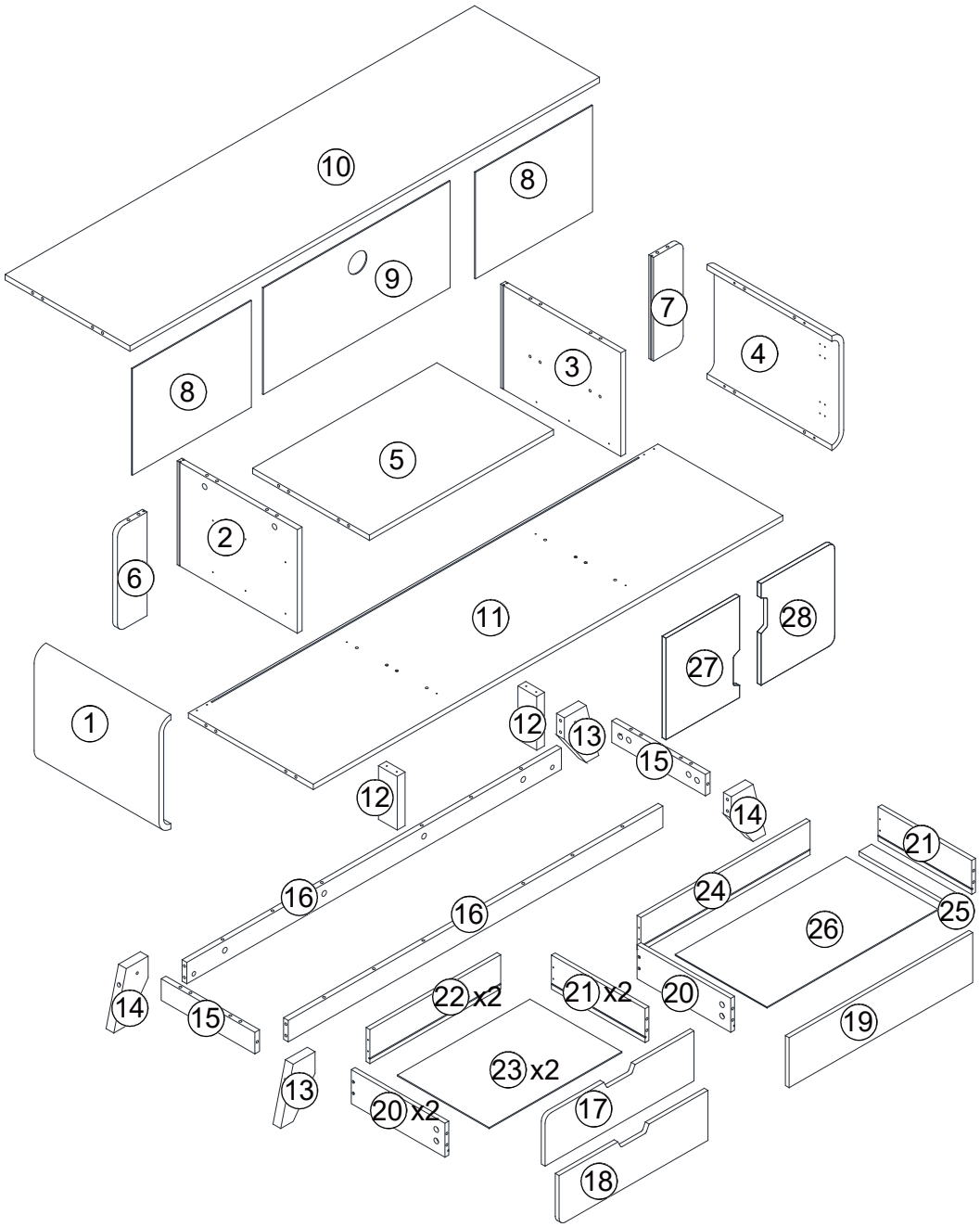

O	x 12
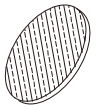	

A	x 49+2
	

B	x 49+2
	

C	x 32+2
	Φ6x30mm

D	x 25
	Φ4x35mm

E	x 36
	Φ3.5x12mm

F	x 1
	

G	x 26
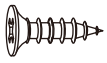	Φ4x12mm

H	x 2
	

I	x 4
	

J	x 4
	Φ6x80mm

K	x 1
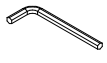	

L	x 12
	Φ3x16mm

M	x 2
	

N	x 2
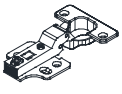	

CL	x 3
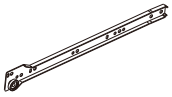	

CR	x 3
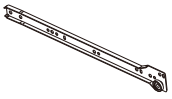	

DL	x 3
	

DR	x 3
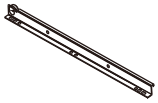	

① 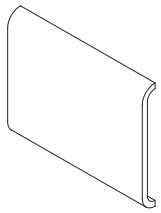 x1	② 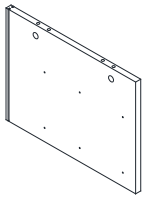 x1	③ 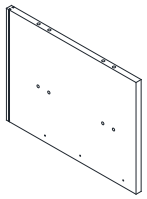 x1	④ 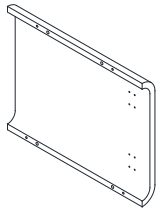 x1
⑤ 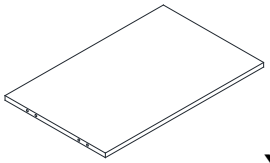 x1	⑥  x1	⑦ 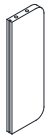 x1	⑧ 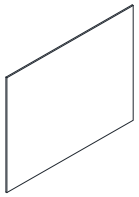 x2
⑨ 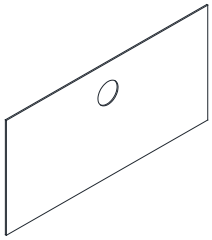 x1	⑩ 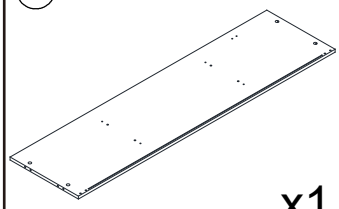 x1	⑪ 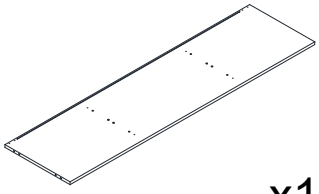 x1	⑫  x2
⑬  x2	⑭ 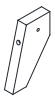 x2	⑮ 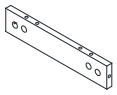 x2	⑯ 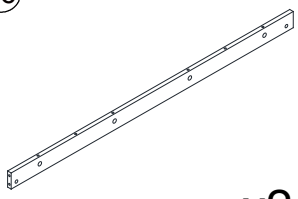 x2
⑰ 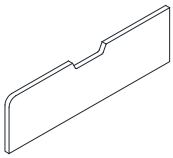 x1	⑱ 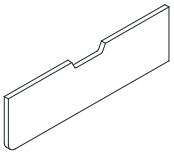 x1	⑲ 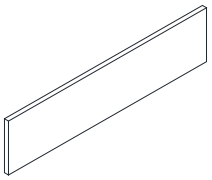 x1	⑳ 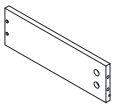 x3
㉑ 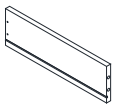 x3	㉒ 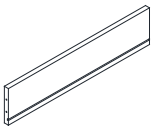 x2	㉓ 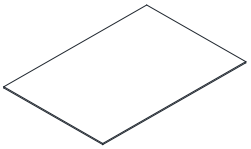 x2	㉔ 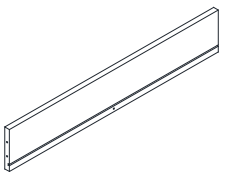 x1
㉕ 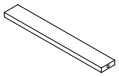 x1	㉖ 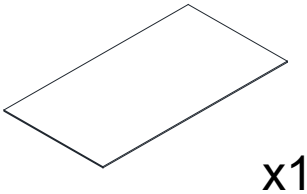 x1	㉗ 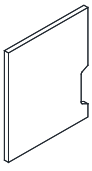 x1	㉘ 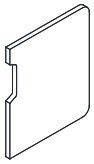 x1

1

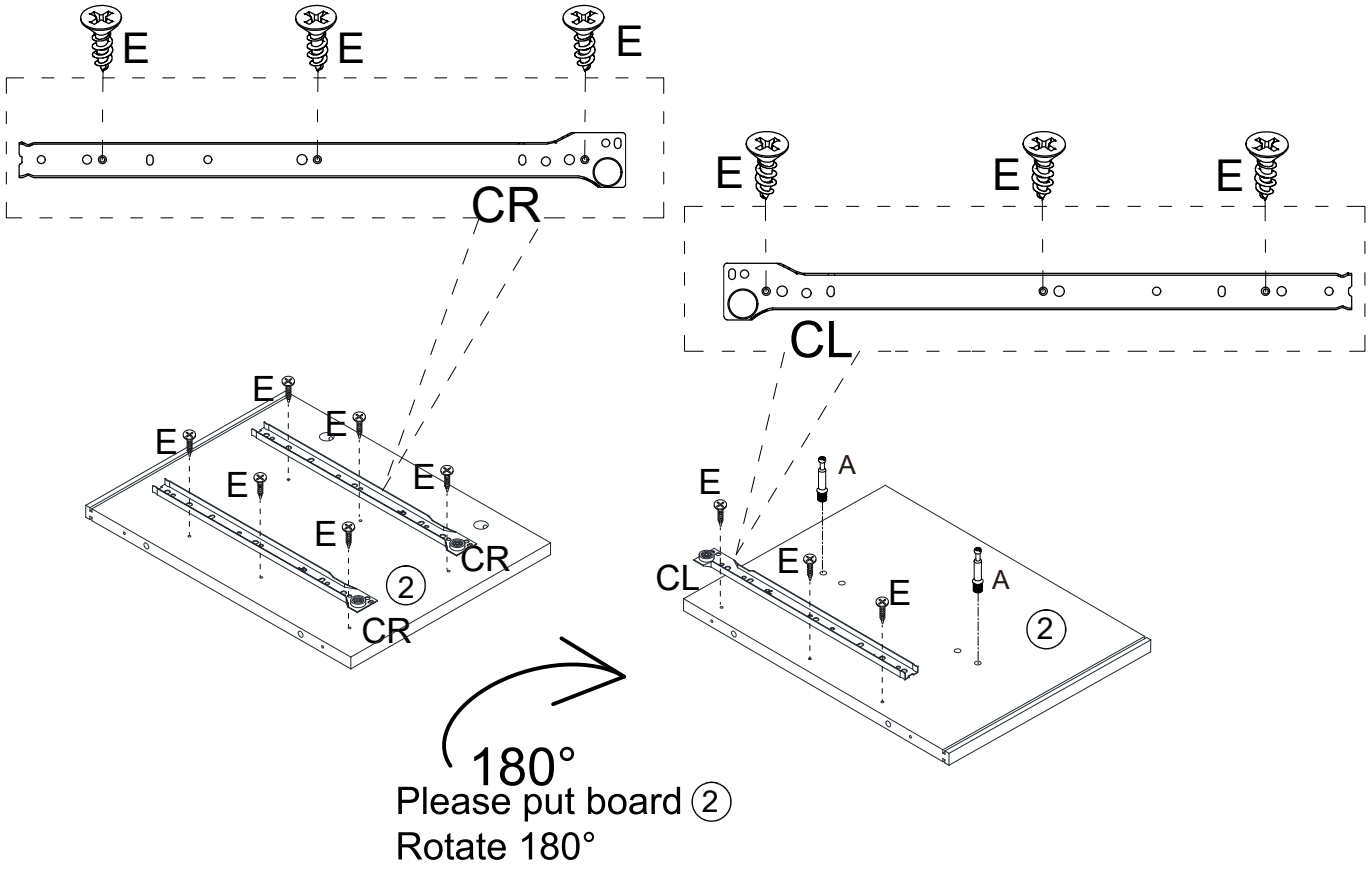

A	x 2

CL	x 1

CR	x 2

E	x 9

2

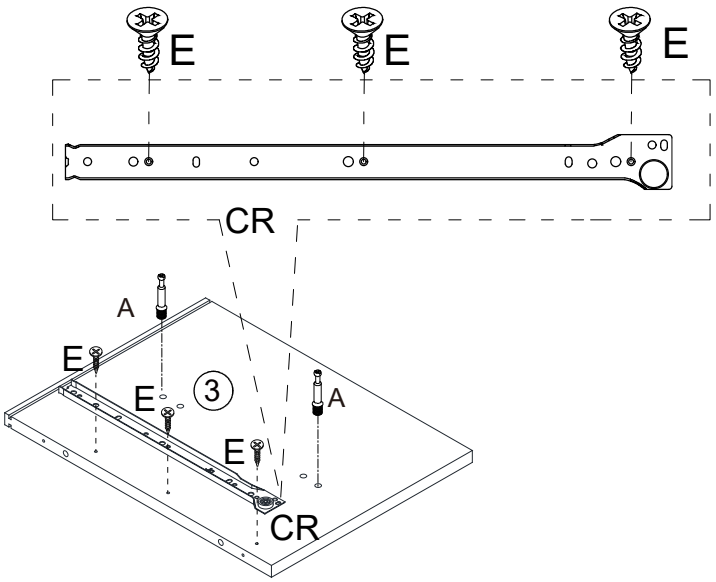

A	x 2

CR	x 1

E	x 3

3

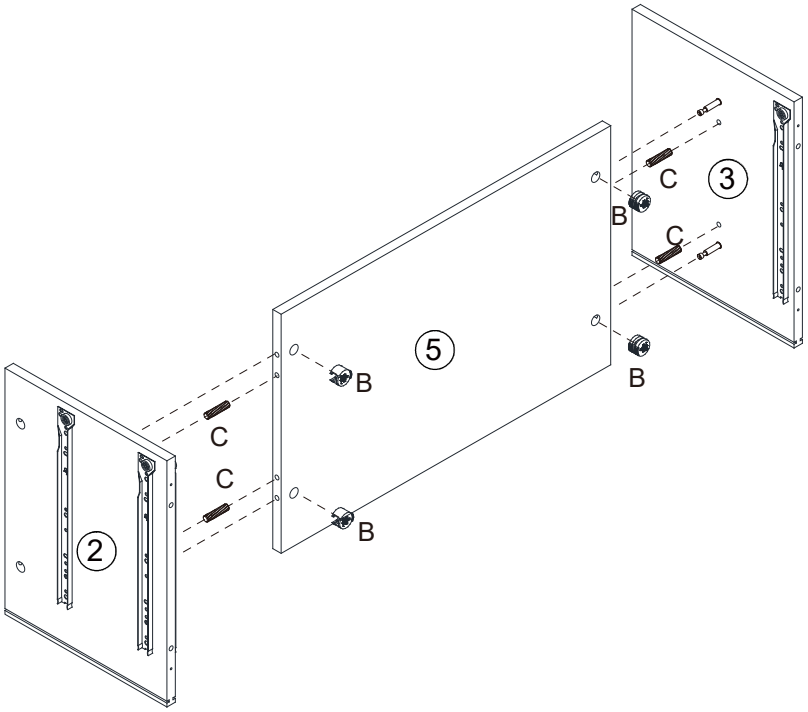

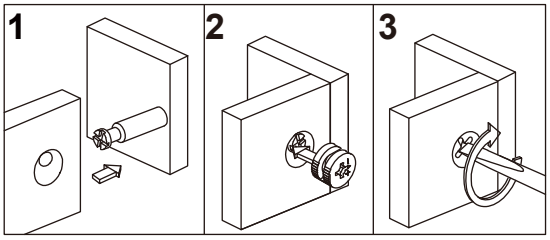

B	x 4



C	x 4



4

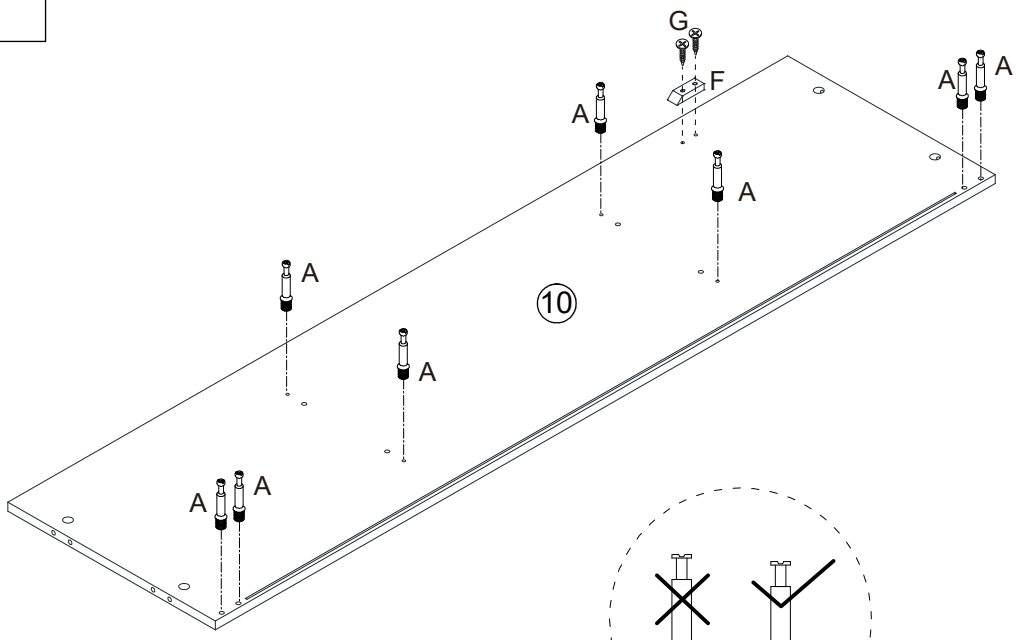

A	x 8

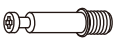

F	x 1



G	x 2



5

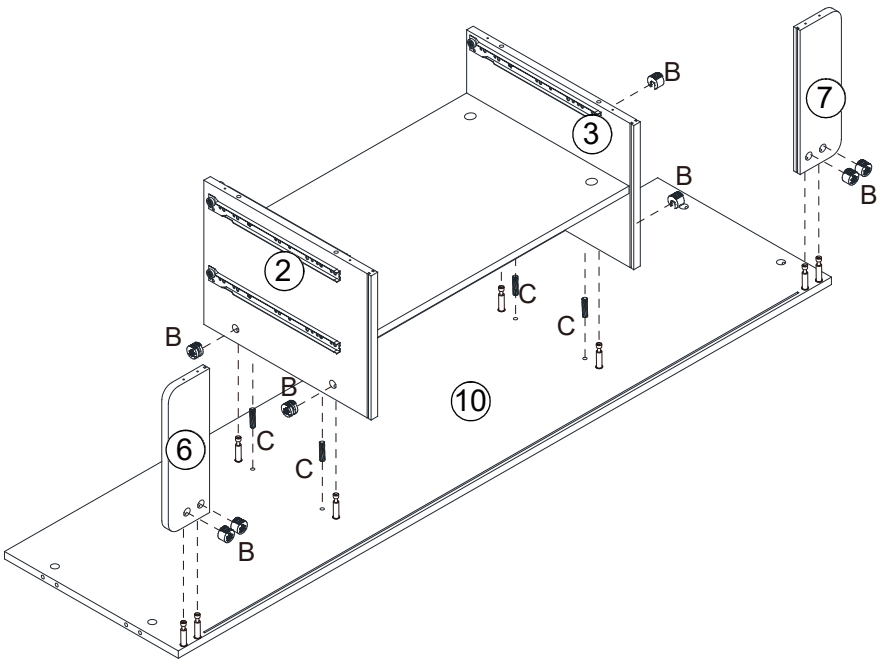

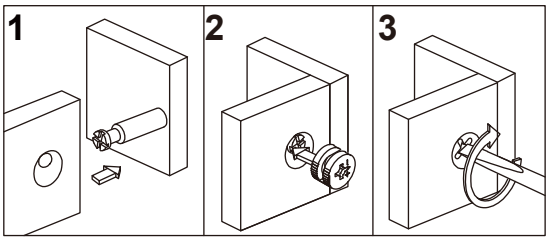

B	x 8
	

C	x 4
	

6

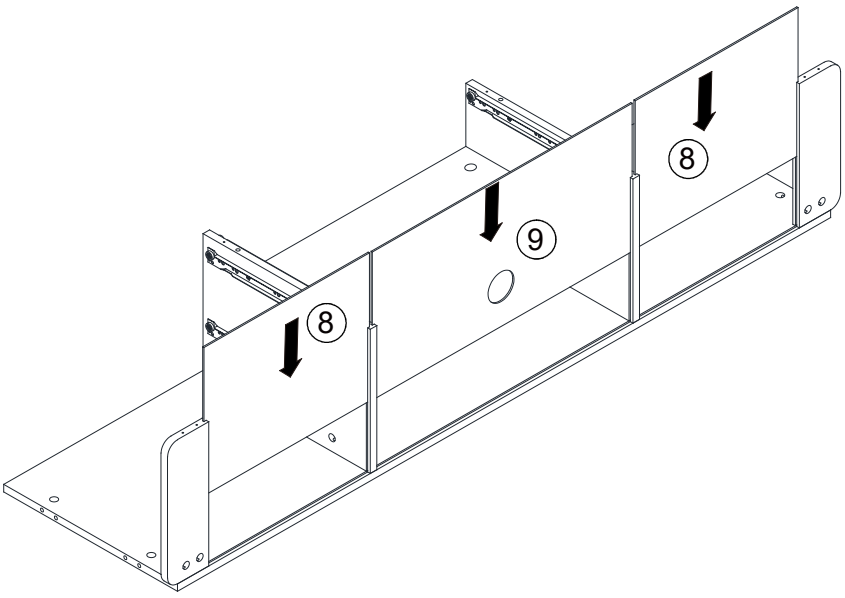

7

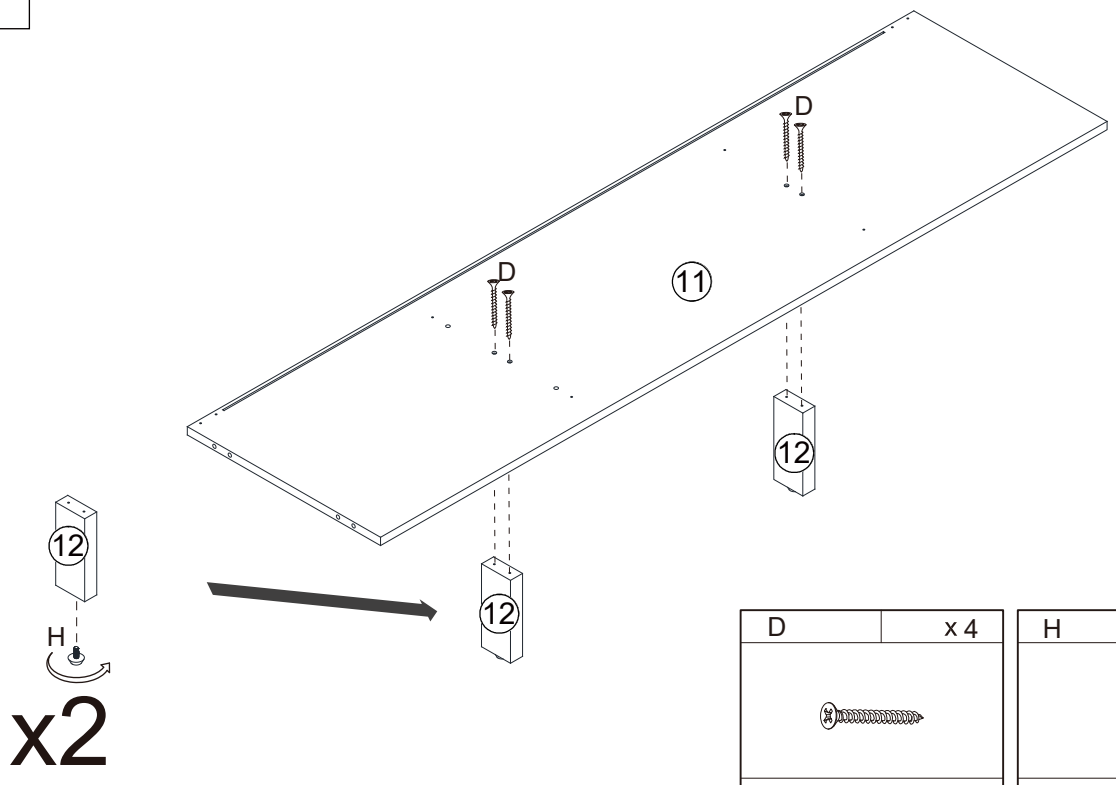

D	x 4

H	x 2

8

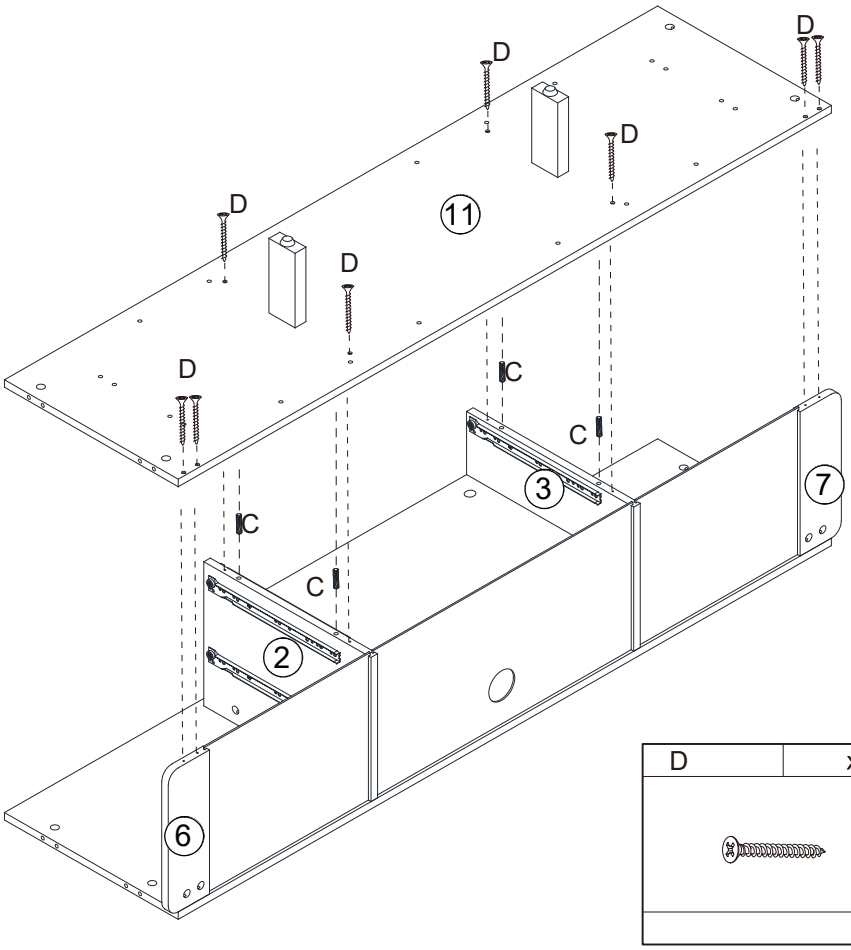

D	x 8

C	x 4

9

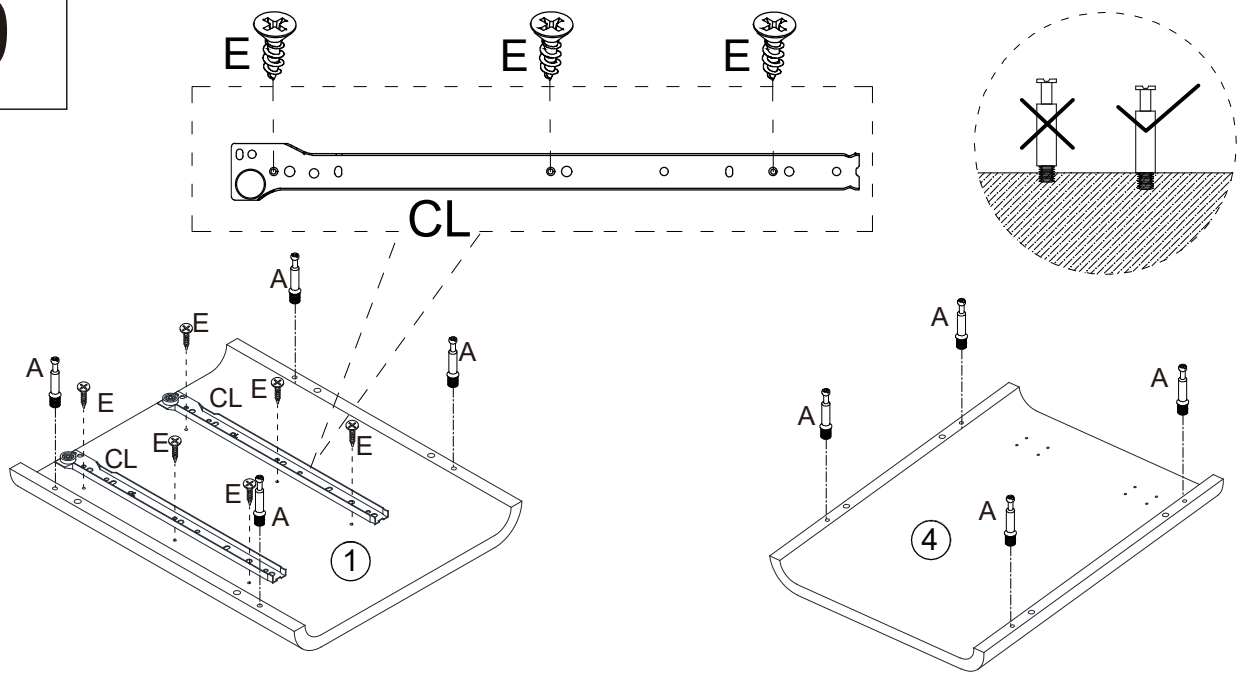

CL	x 2
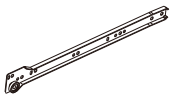	

E	x 6
	

A	x 8
	

10

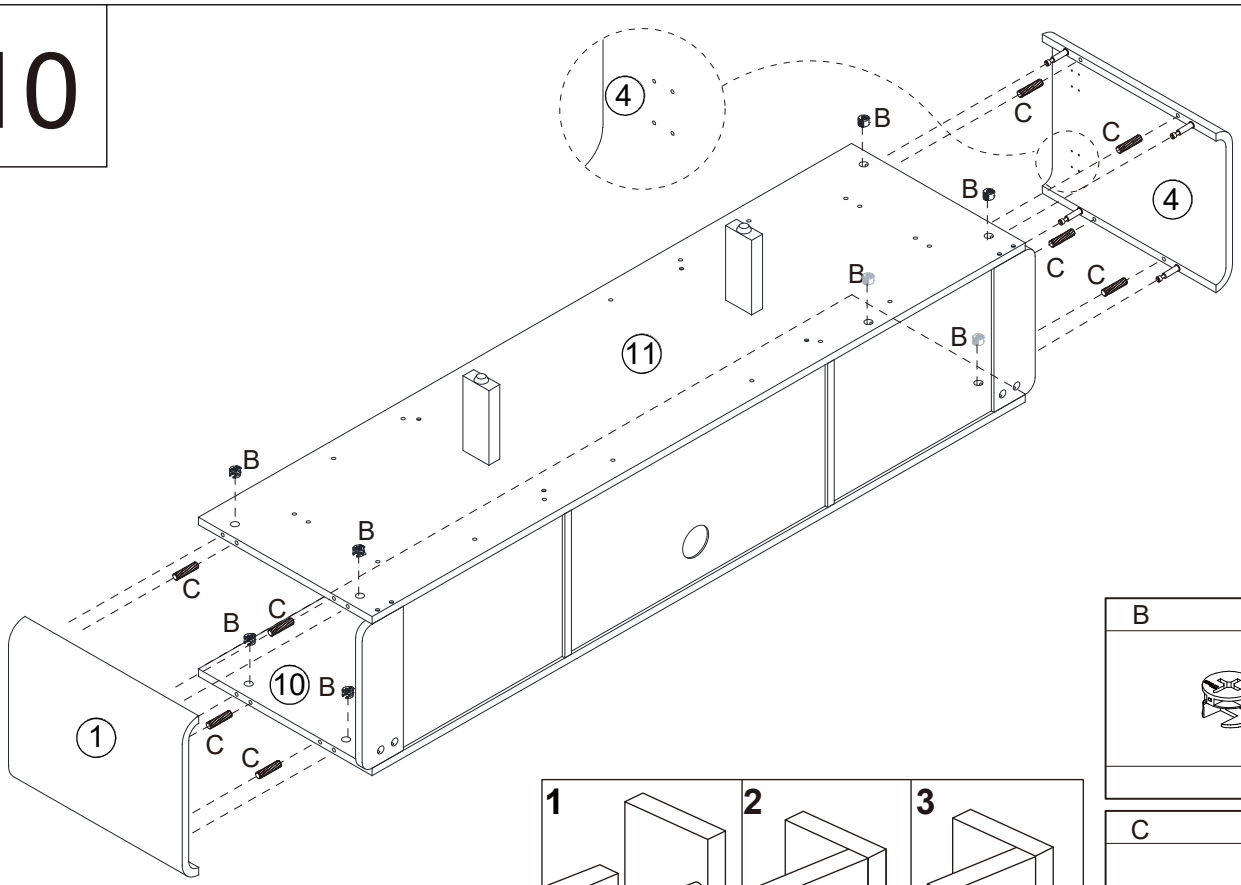

B	x 8

C	x 8
	

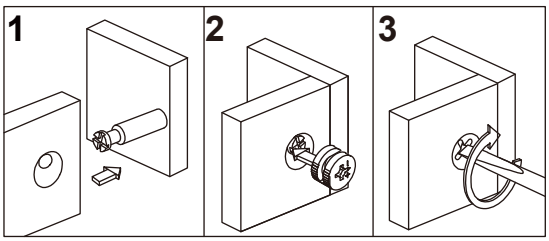

11

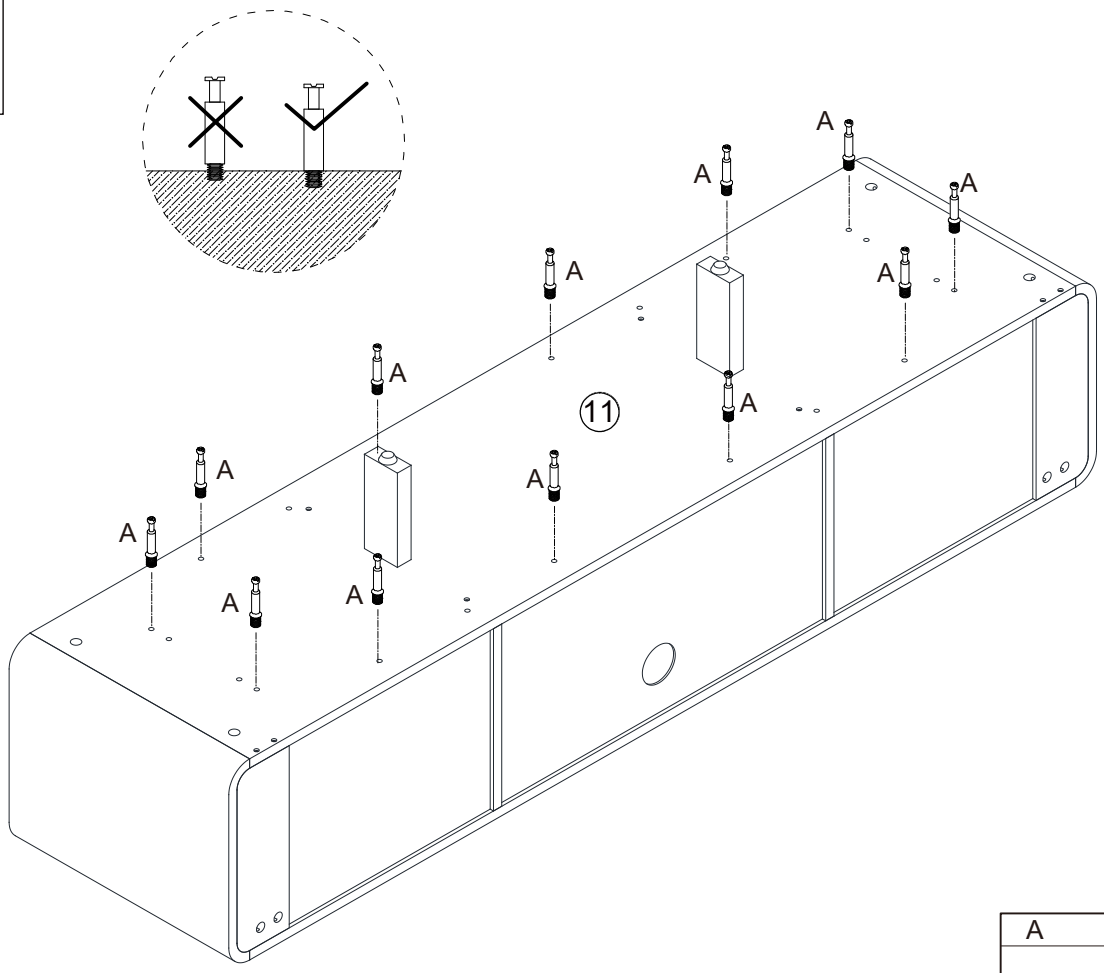

A	x 12
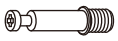	

12

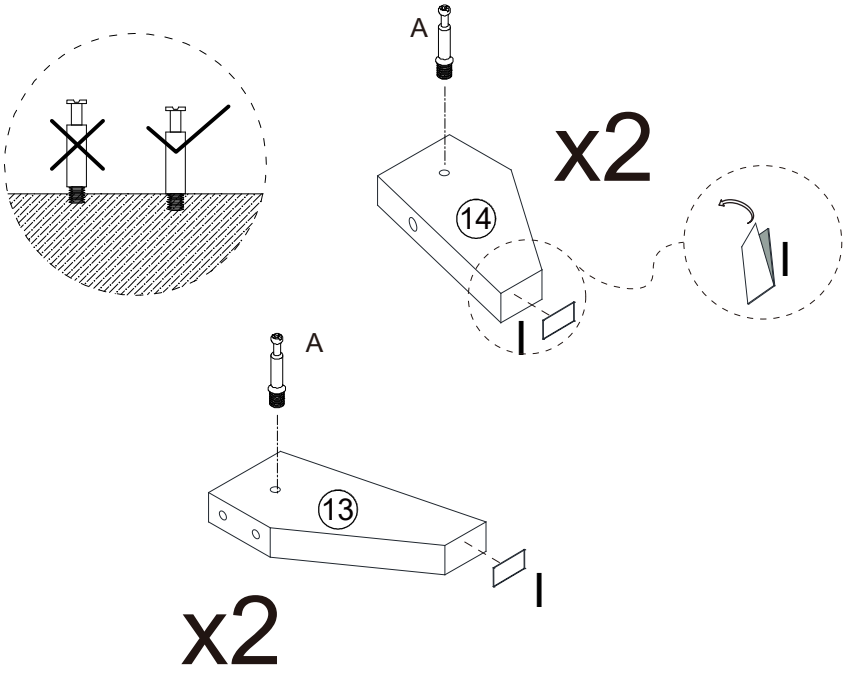

I	x 4
	

A	x 4
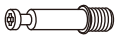	

13

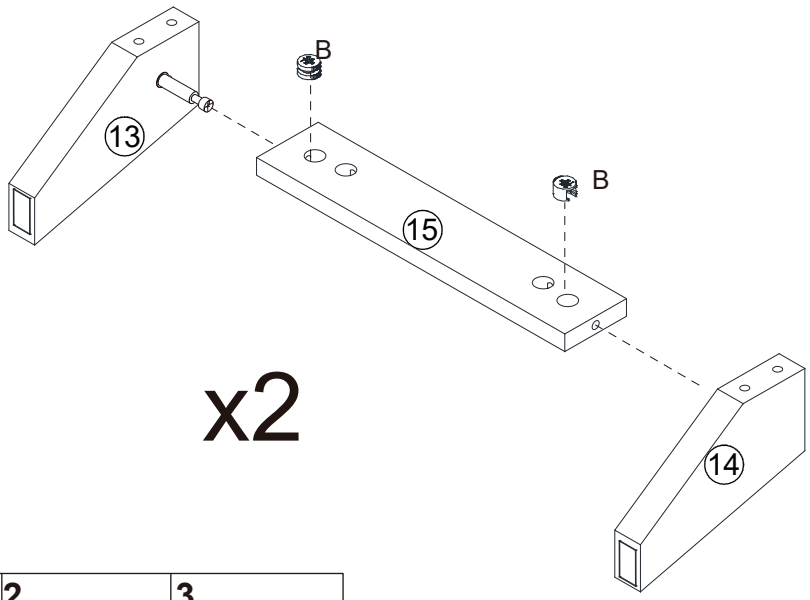

x2

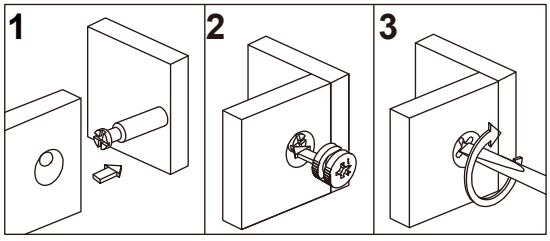

B	x 4
	

14

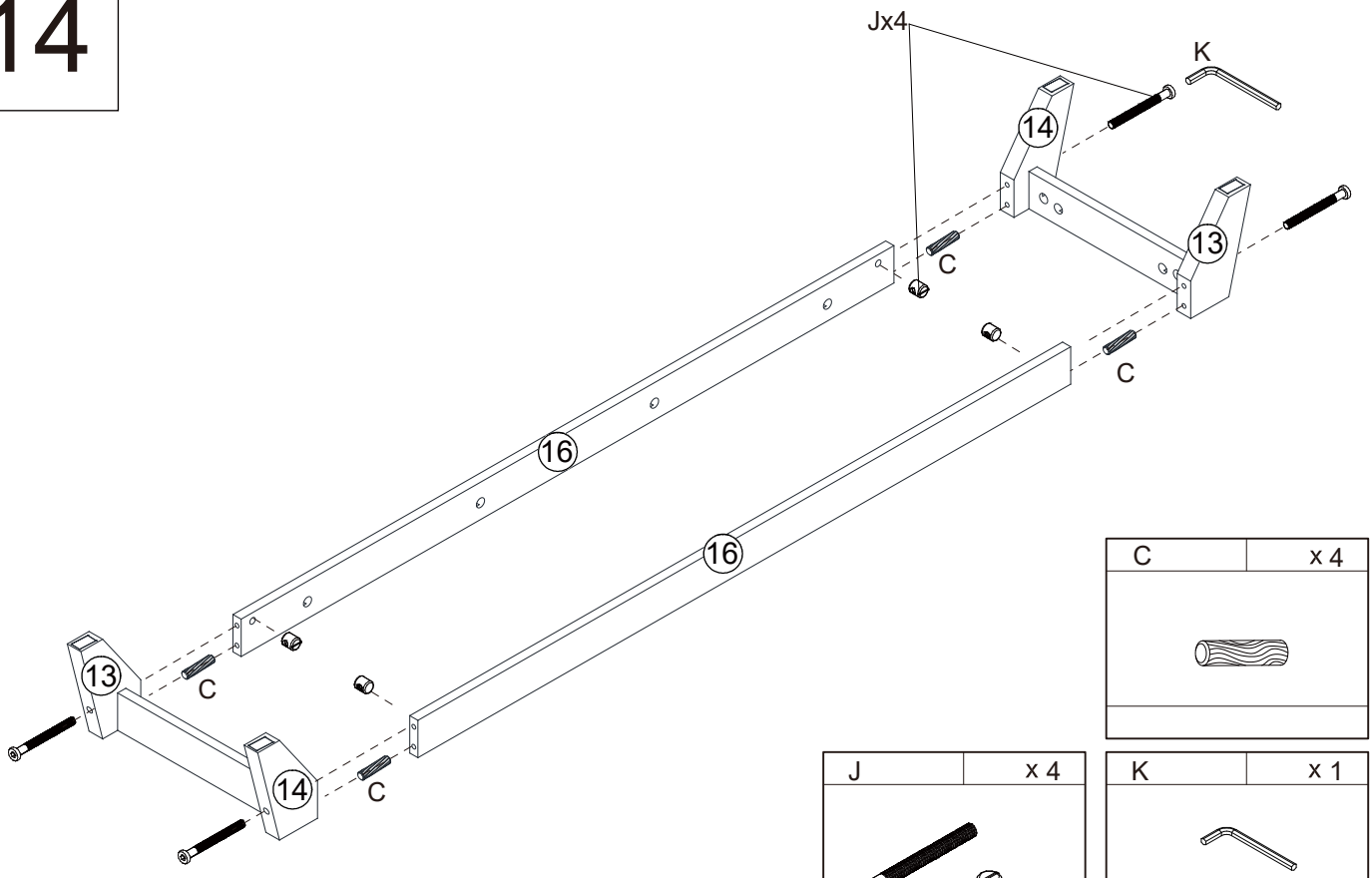

C	x 4

J	x 4

K	x 1

15

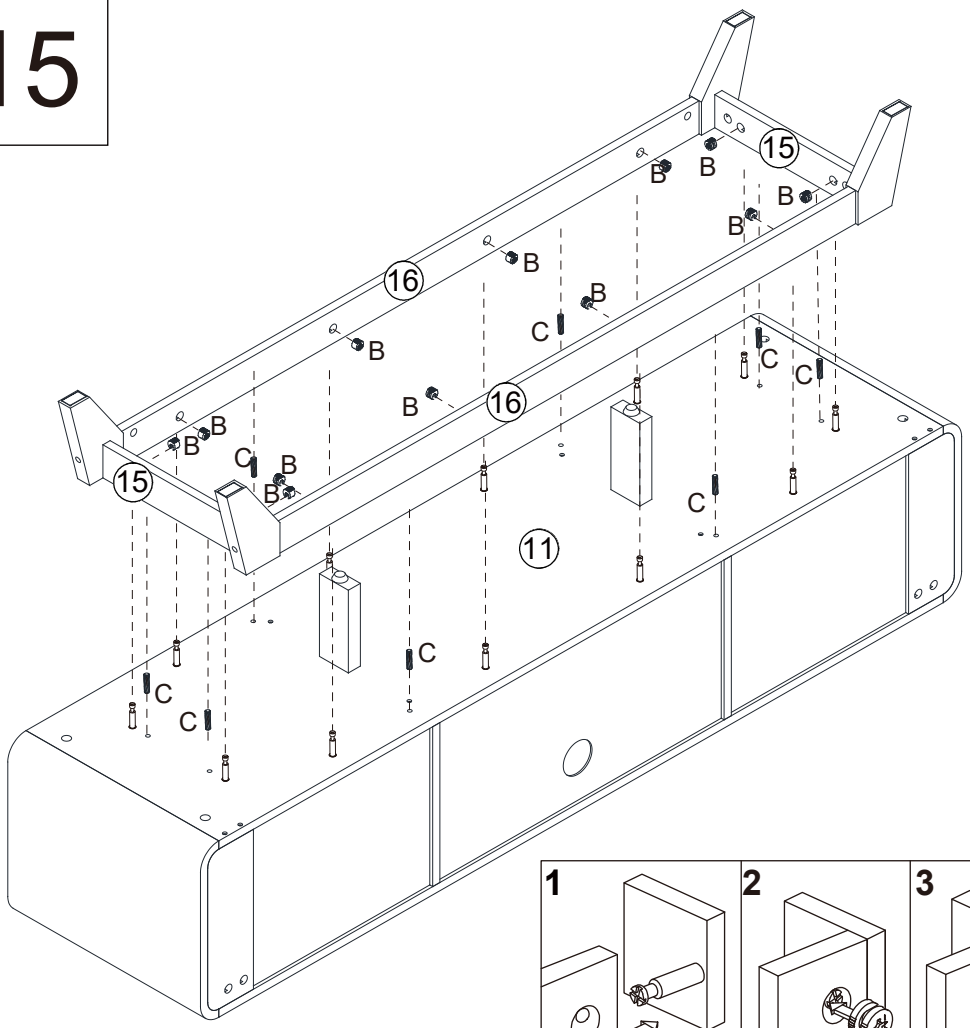

B	x 12
	

C	x 8
	

16

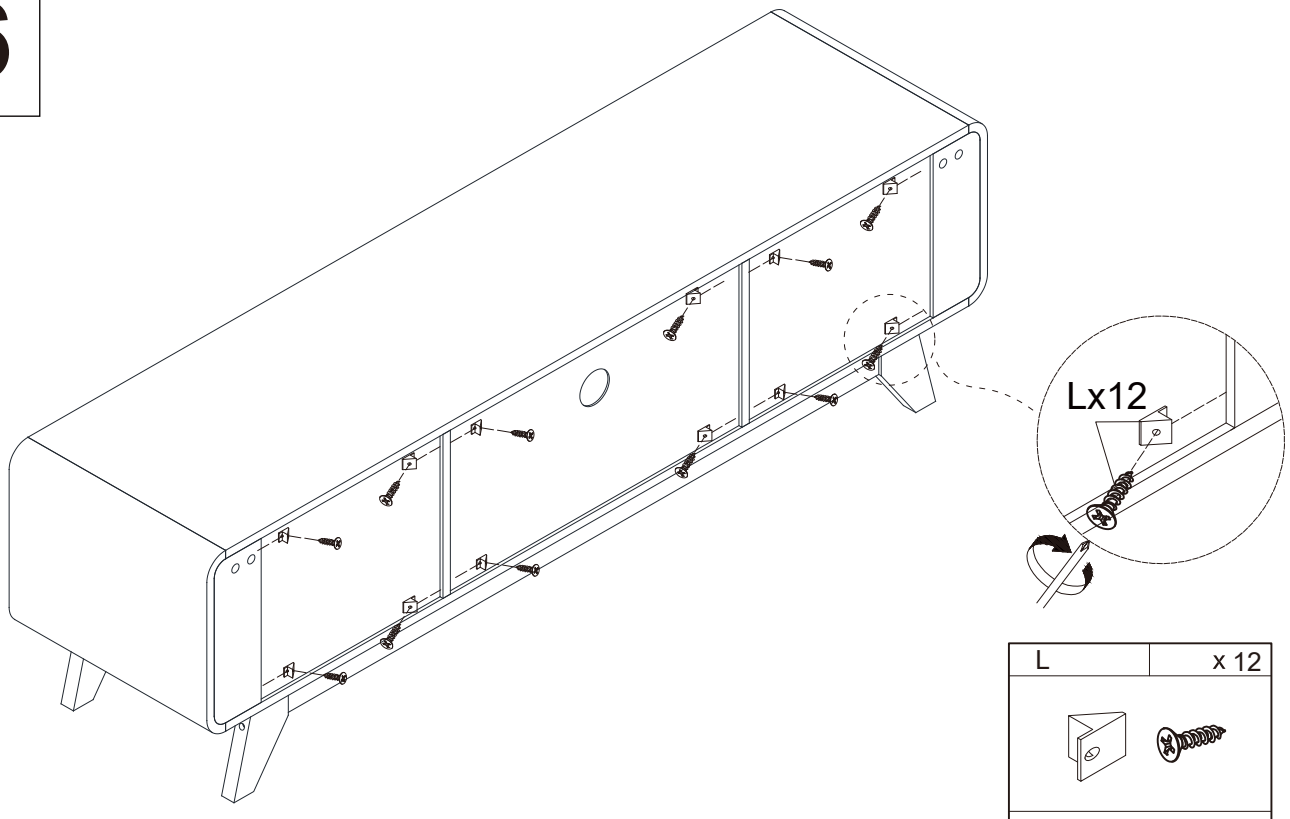

L	x 12

17

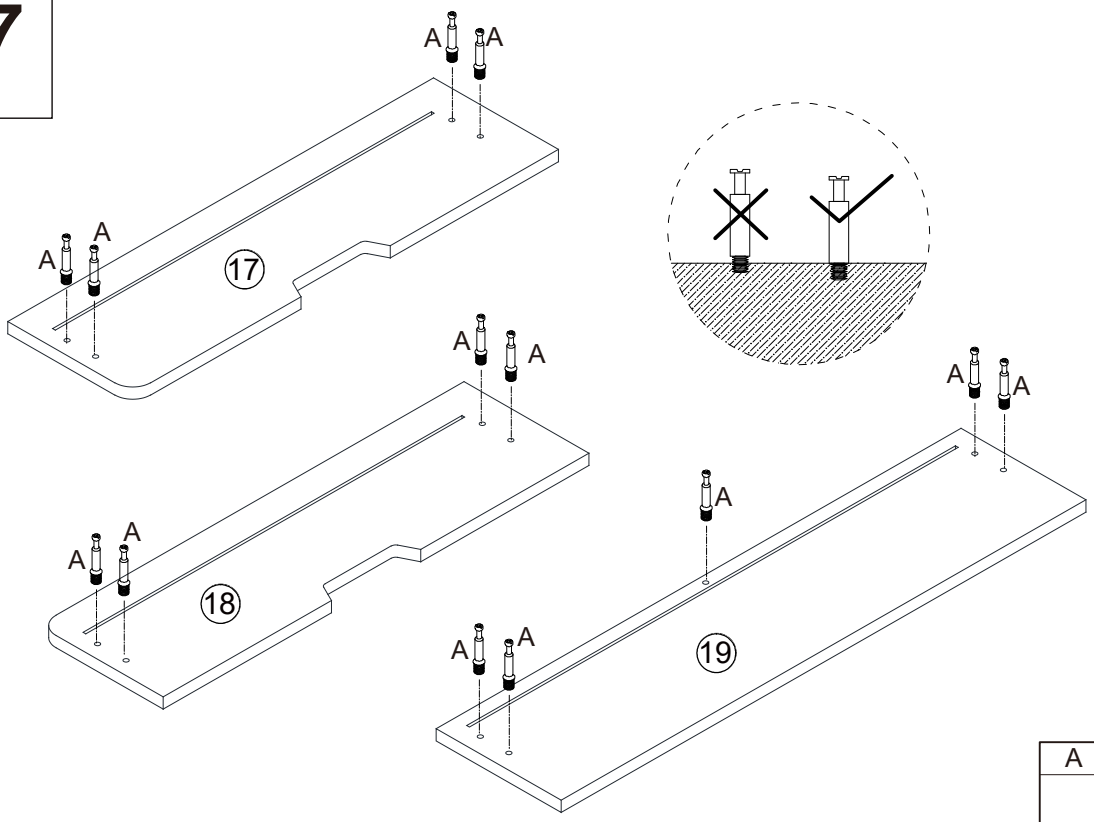

A	x 13
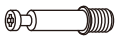	

18

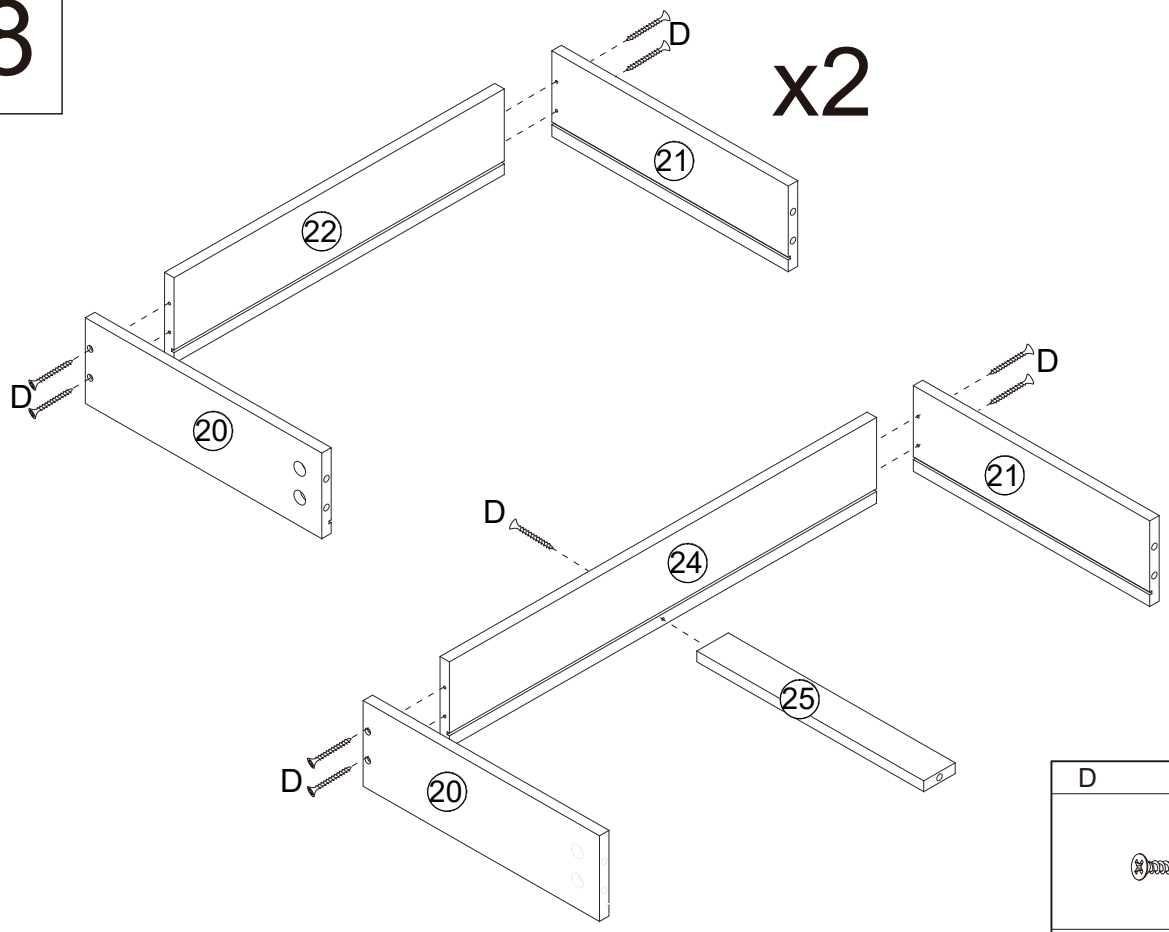

D	x 13
	

19

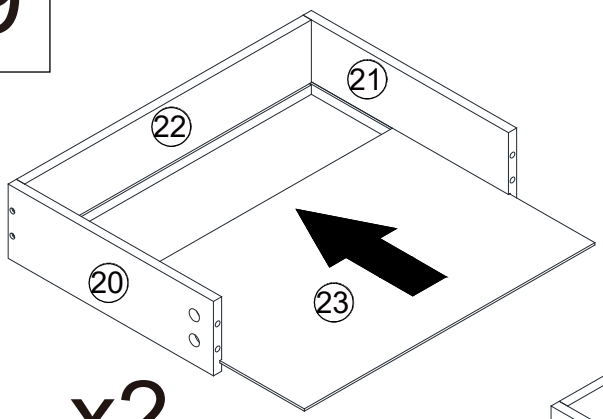

x2

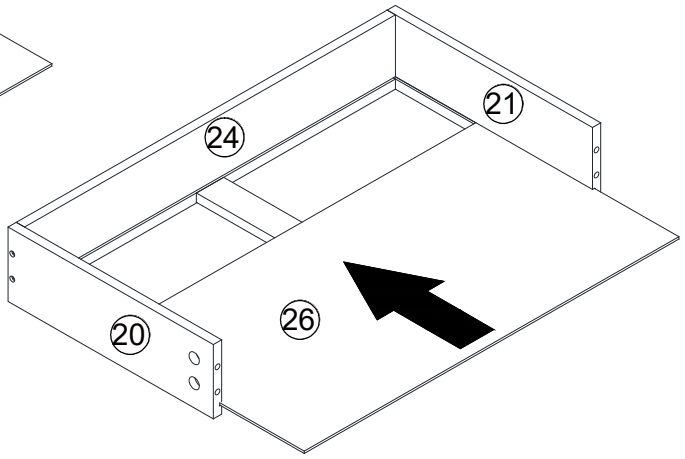

20

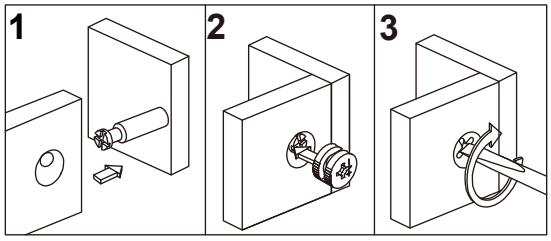

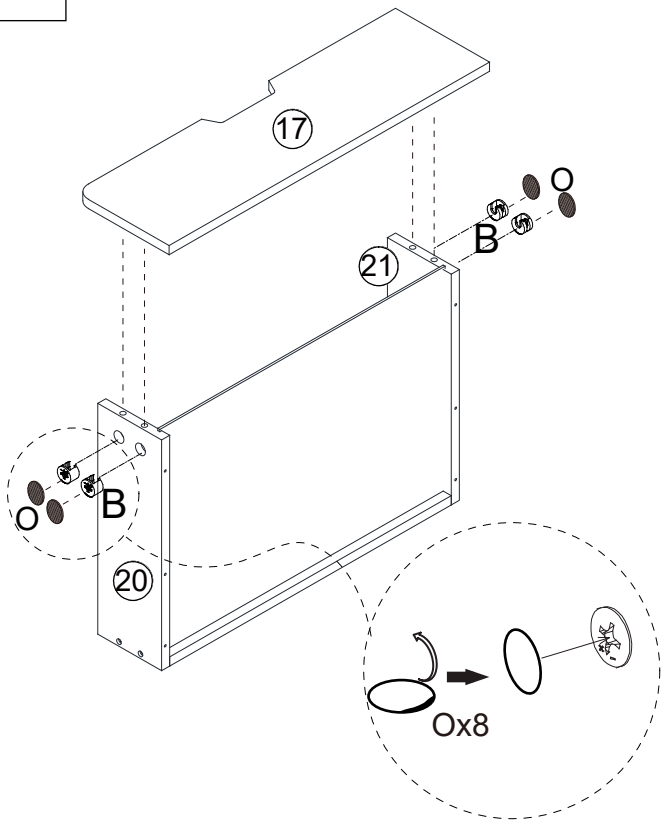

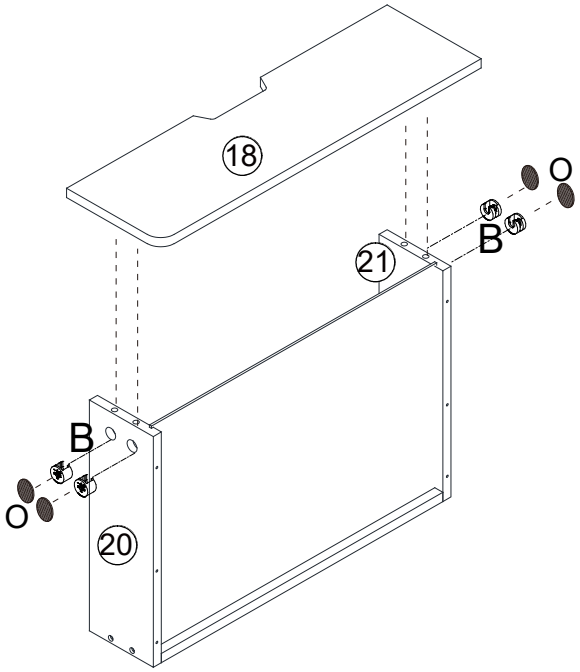

Using Cover-up Sticker Ox8 to cover the exposed part of Screws.

O	x 4
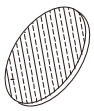	

B	x 8
	

21

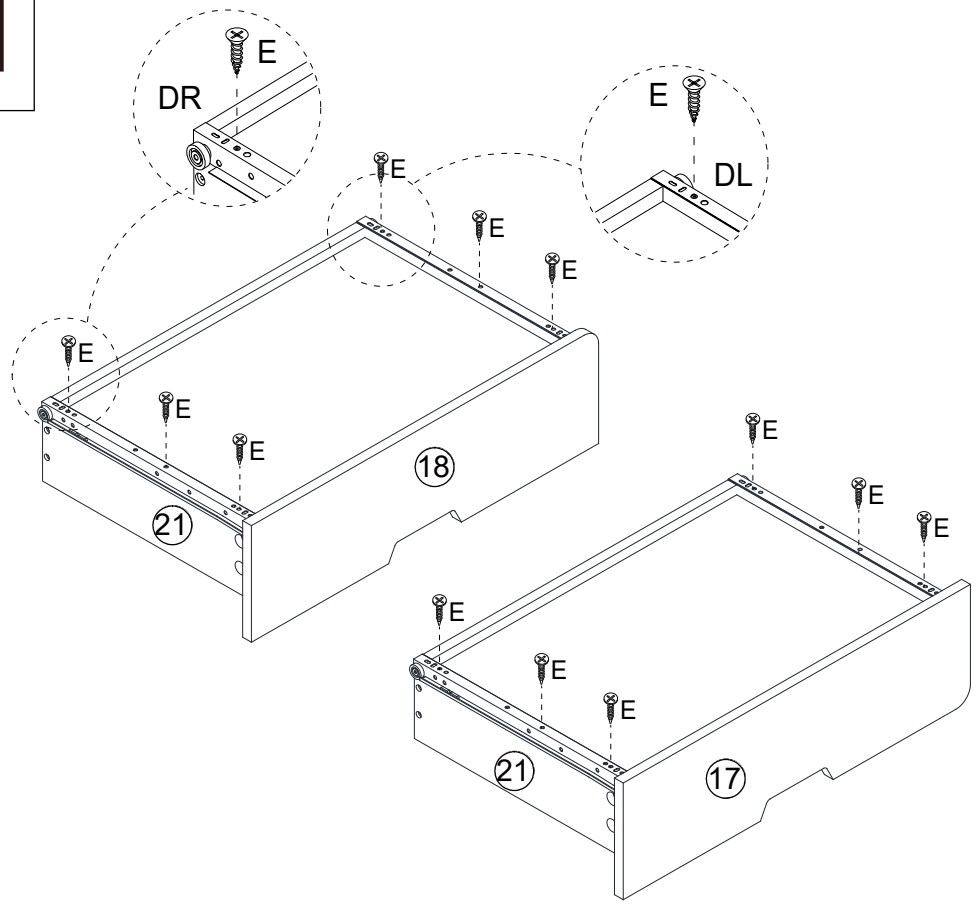

E	x 12

DL	x 2

DR	x 2

22

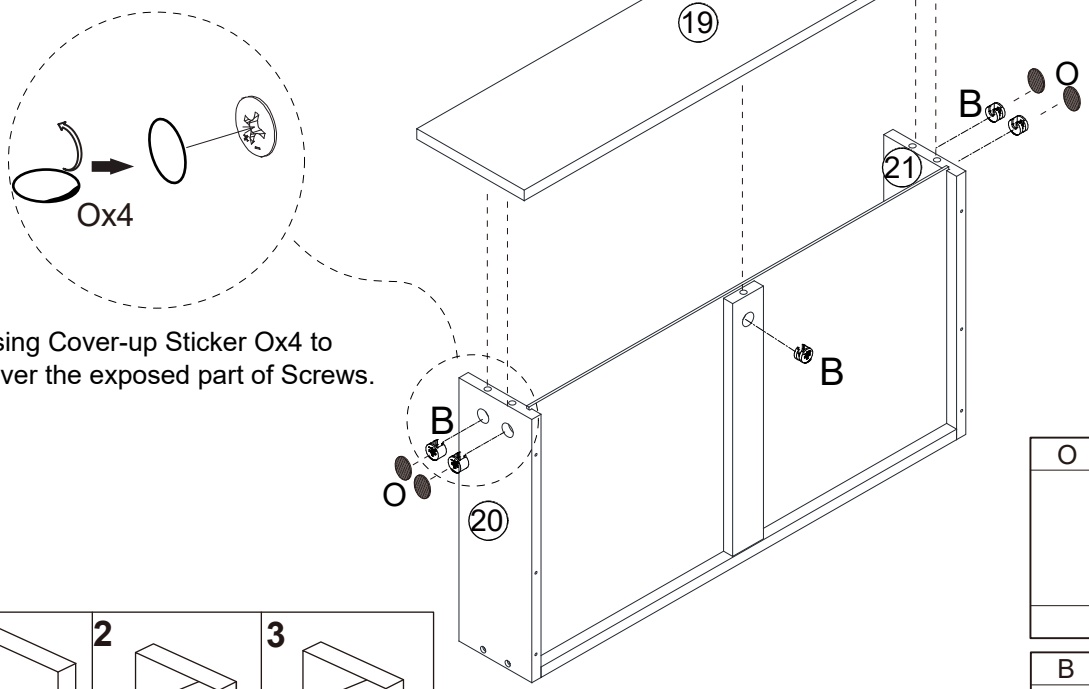

Using Cover-up Sticker Ox4 to cover the exposed part of Screws.

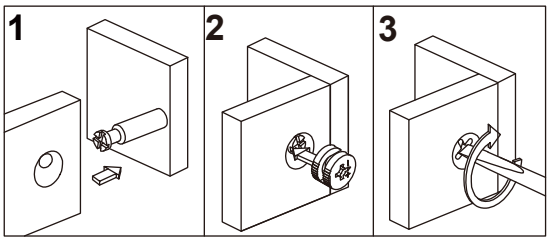

O	x 4

B	x 5

23

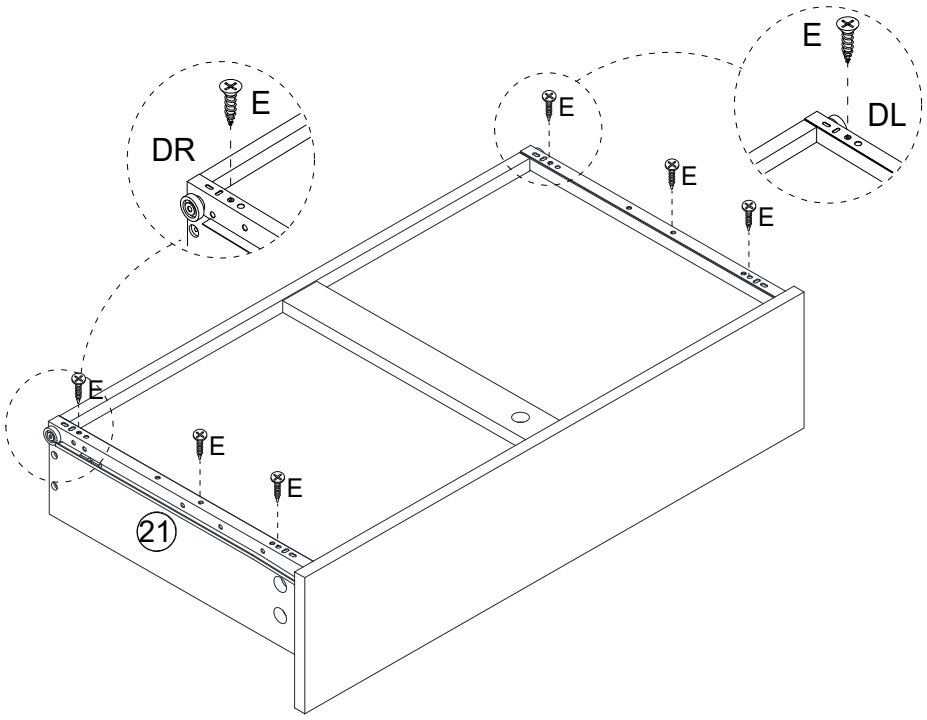

E	x 6

DL	x 1

DR	x 1

24

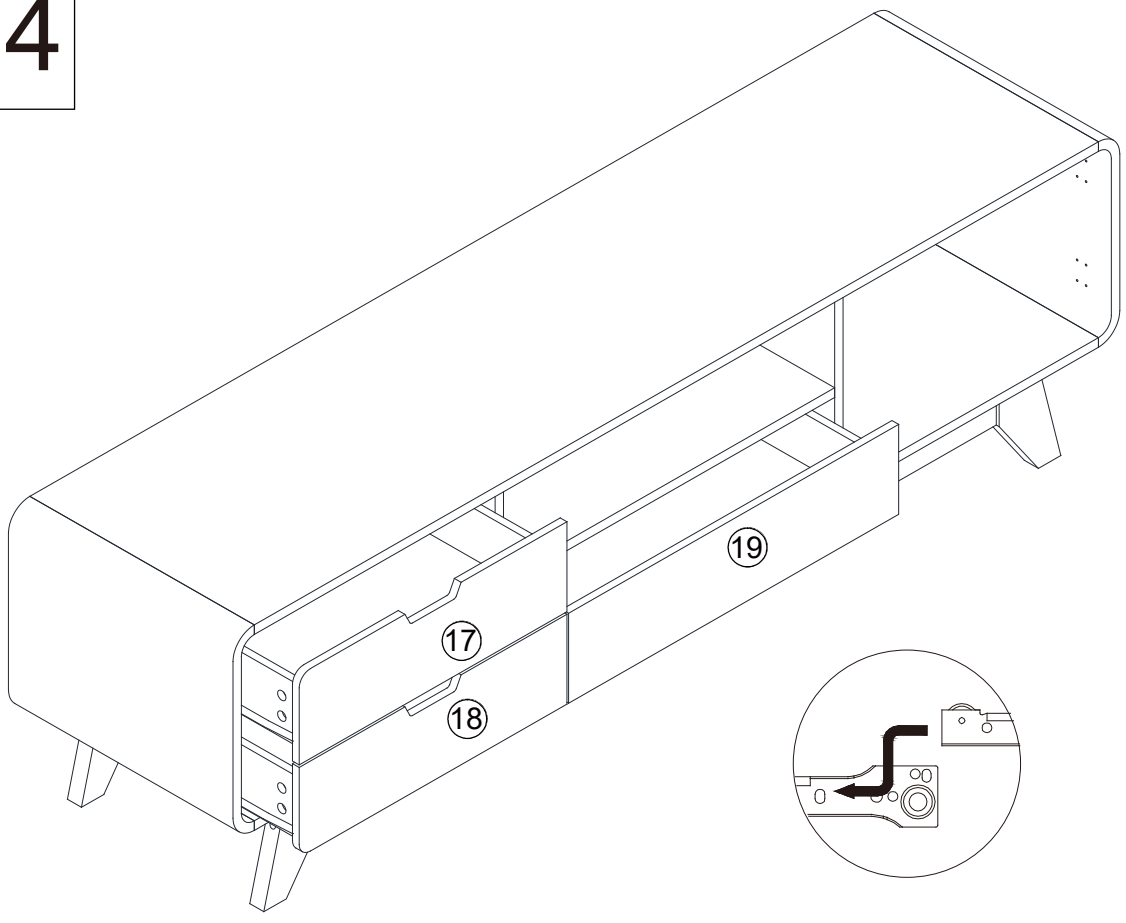

25

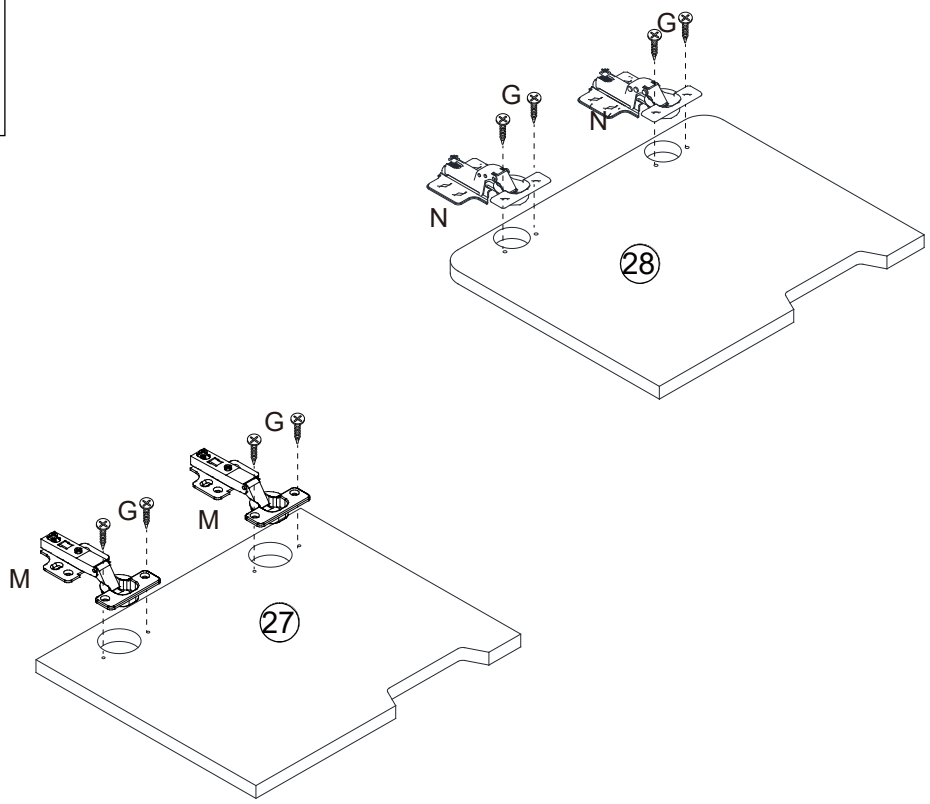

N	x 2
	

G	x 8
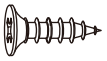	

M	x 2
	

26

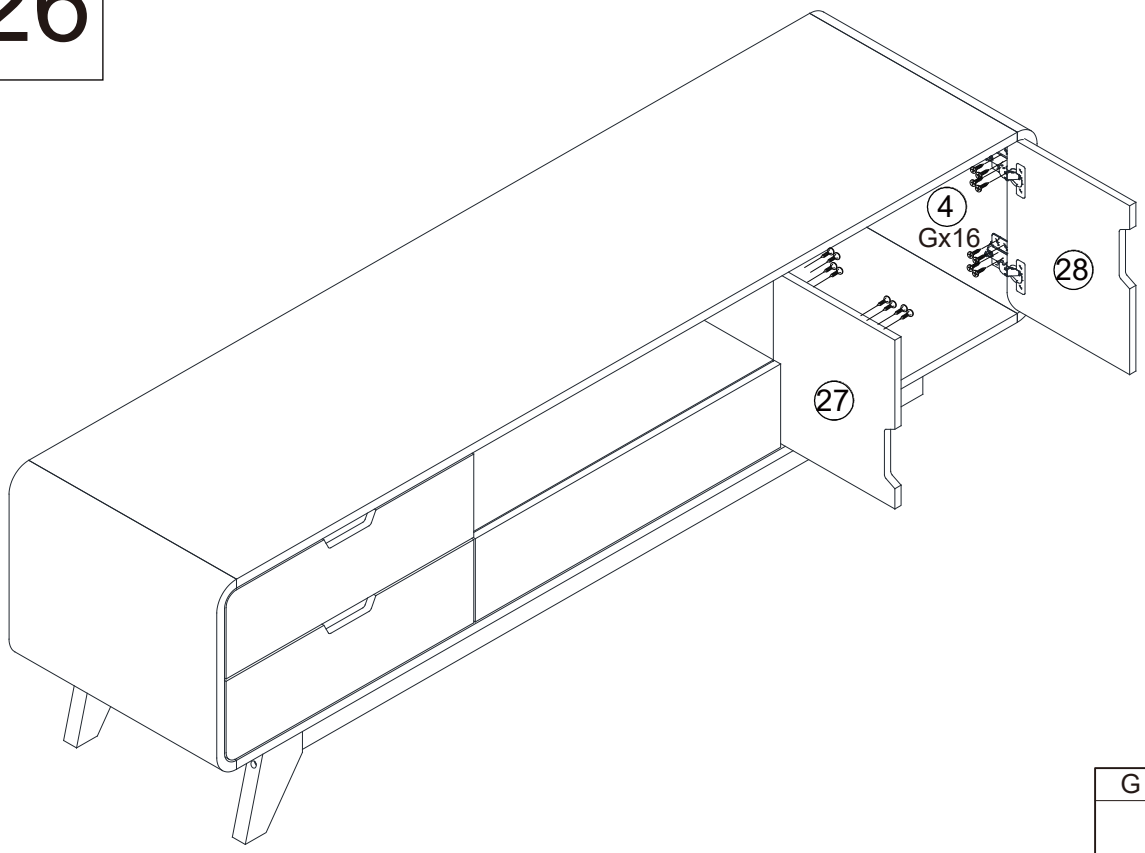

G	x 16
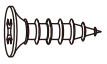	

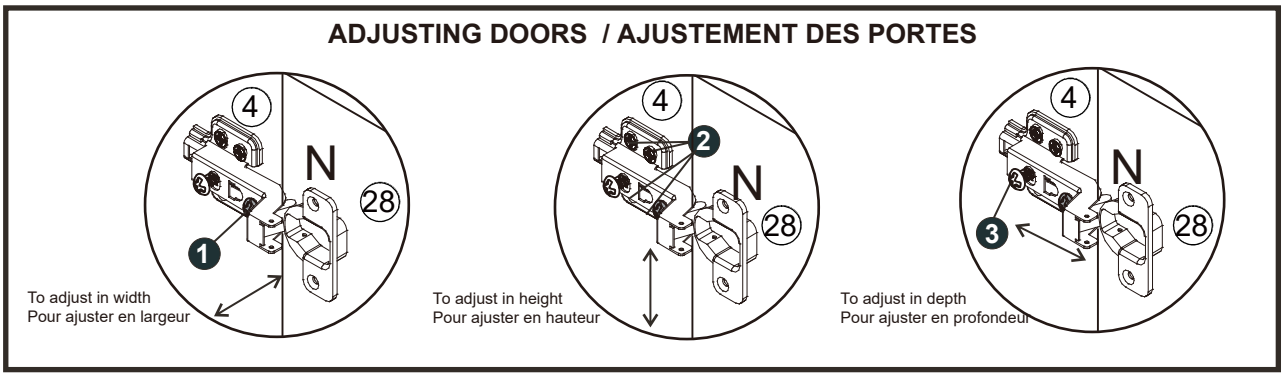

First, install one pair of part N onto 28 . Then install part 28 onto part 4 .
When attaching doors, first secure the four screws in the oval holes of part N (these align with the four small holes on part 4). Close the door to check if its position is correct. If not, adjust the position according to the diagram. Once adjusted, tighten the four screws in the round holes of part N.

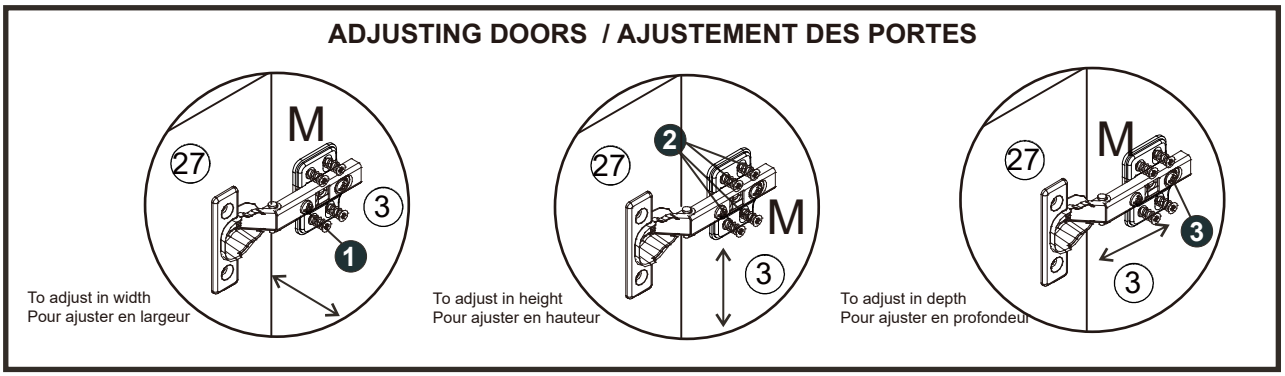

First, install one pair of part M onto 27 . Then install part 27 onto part 3 .
When attaching doors, first secure the four screws in the oval holes of part N (these align with the four small holes on part 3). Close the door to check if its position is correct. If not, adjust the position according to the diagram. Once adjusted, tighten the four screws in the round holes of part M.

After Sales Service

If any problem occurs, you can check the manual for troubleshooting indetail, or contact to our customer service on Amazon.

To contact authorized Amazon seller, please following steps:

Step1	Go to Your Orders. Find your order in the list.
Step2	Click “Ask a question". (Or go to the product detailpage, select the name of the seller.On the next page, select "Ask a Question").
Step3	Select the product and tap “Other" options in theSeller Messaging Assistant chat.
Step4	Send the message to us for after-sales support.

We always work hard to serve you and provide you a better customerexperience.
Customer service:

Customer service: Wolfthontech1@gmail.com

Please attach follow purchase infor in the message:

Order lD: _____

Model: _____

Purchase Date: _____

Buyer Name: _____

Please feel free to send us the text or email. We will reply to you within 24 hours. Also please feel free to contact us if you have received the defective items.