WARNING

* Switch off the main electrical supply from the main fuse box / circuit breaker before installation.
* Inspect item carefully before attempting to install.
* If there is any damages or obvious defects, do not install.
* Item may not be returned once it has been installed.

CARE AND MAINTENANCE

* To clean the outside of the fixture, use a dry or slightly dampened clean cloth (use clean water, never a solvent) to wipe the surface of the fixture.
* To clean the inside of the fixture, first disconnect power to the fixture by turning off the circuit breaker or by removing the fuse at the fuse box. Next, use a dry or slightly dampened clean cloth (use clean water, never a solvent) to wipe the interior surface of the fixture.
* Do not use any cleaners with chemical, solvents or harsh abrasives. Use only a dry soft cloth to dust or wipe carefully.

NOTICE& IMPORTANT SAFETY INSTRUCTIONS

** WE RECOMMEND INSTALLATION OF THIS LIGHTING FIXTURE BE DONE BY A LICENSED ELECTRICIAN **
* Please make sure that you have all parts indicated before you begin assembly of this item
* This item should be assembled on a soft surface to prevent scratching the finish during assembly
* To reduce the risk of fire, electrical shock or injury to persons or property, please follow the guideline below for safe use and installation
*The external flexible cable or cord of this lamp cannot be replaced
If the cord is damaged, the lamp shall be destroyed

Part List and Hardware List

PIECE	DESCRIPTION	PICTURE	QUANTITY	PIECE	DESCRIPTION	PICTURE	QUANTITY
A	wire connector		3X	E	ground screw		1X
B	mounting bracket		1X	F	mounting screw		2X
C	machine screw		2X	G	the metal plate		2X
D	canopy		1X				

Product Dimensions:s: 33.5"Lx4.375"Wx7-75.75"H

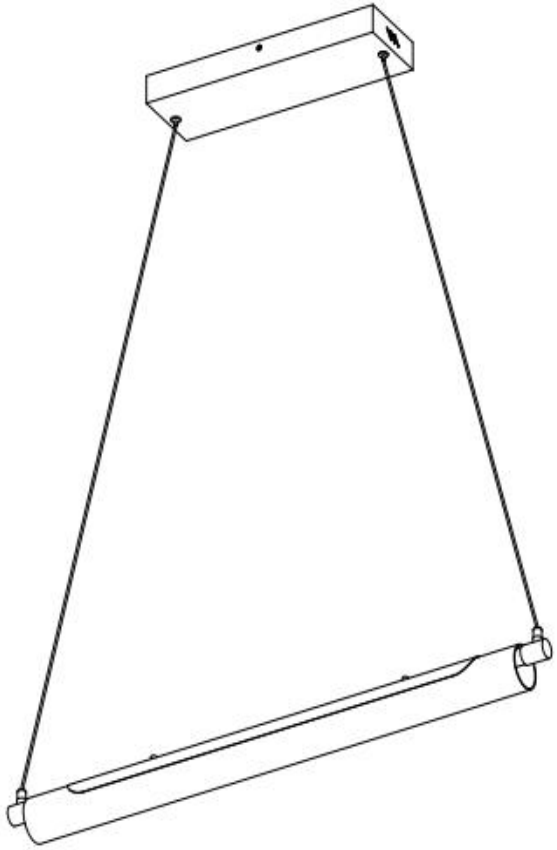

PREPARATION

* Before beginning assembly of product, make sure all parts are present. Compare parts with package contents list and hardware contents list.
* If any part is missing or damaged, do not attempt to assemble the product.
* Estimated Assembly Time: 20 minutes.
* Tools Required for Assembly (not included): Screwdriver, Junction box
* If you are having difficulty, our friendly Customer Care team is always here to help.

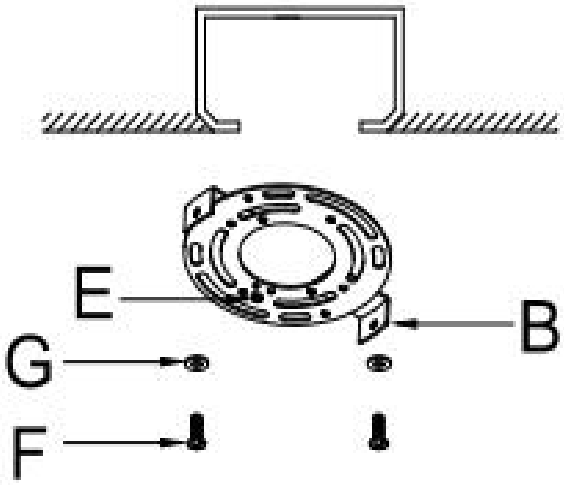

Step 1: Fix the mounting bracket(B) to the outlet box with mounting screw(F).

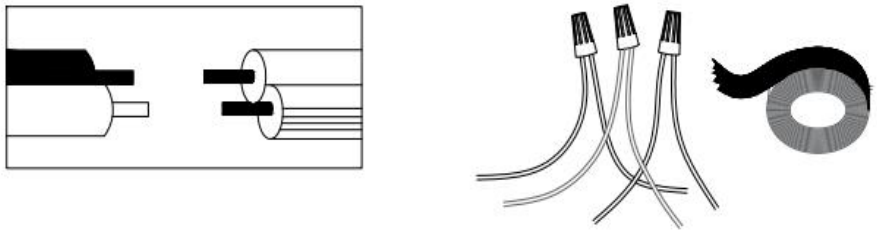

Step 2: :Wire connection
Connect fixture neutral wire (ribbed) to the outlet box neutral wire (usually white) using a wire nut.Connect fixture hot wire (smooth with markings) to the outlet box hot wire (usually black) using a wire nut.
CAUTION: Do not reverse the hot and neutral connections.
Grounding Instructions:
Wrap ground wire from outlet box around green ground screw(E) on mounting bracket, no less than 2" from wire end. Tighten ground screw. If fixture is supplied with a ground wire, connect to outlet ground wire with a wire nut.

PREPARATION

* Before beginning assembly of product, make sure all parts are present. Compare parts with package contents list and hardware contents list.
* If any part is missing or damaged, do not attempt to assemble the product.
* Estimated Assembly Time: 20 minutes.
* Tools Required for Assembly (not included): Screwdriver, Junction box
* If you are having difficulty, our friendly Customer Care team is always here to help.

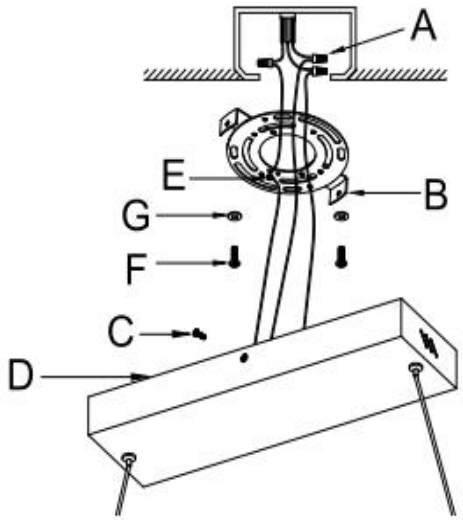

Step 3:Carefully remove packaging from fixture, adjust wire length to desired mounting height,fix the canopy(D) to bracket(B) using machine screw(C).

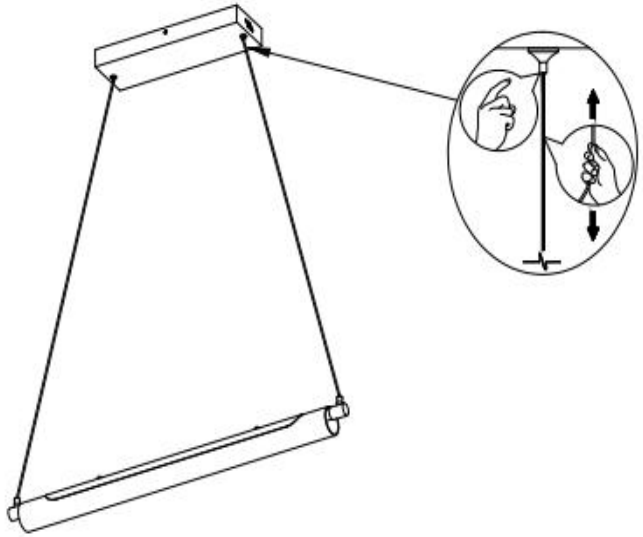

Step 4: Press the expansion piece and adjust the height of the lamp body.Turn on the light and adjust the brightness.