# Massage Push Back Chair Accessory Part List

| A | B | C | D | E | F | G |
|---|---|---|---|---|---|---|
| | | | | | | |
| Chair base | Backrest | Left and right wing | Power cord | Remote control | Front leg | Back leg |

## Massage Pushback Chair Assembly Instruction

**STEP 1**

Take the chair base from the box and turn over it, then screw the front and back legs into the chair base.

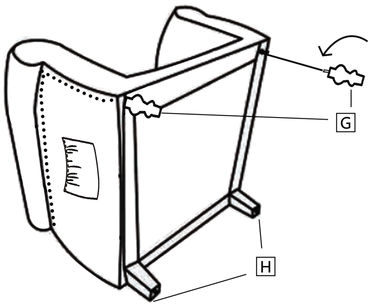




## Massage Pushback Chair Assembly Instruction

**STEP2**

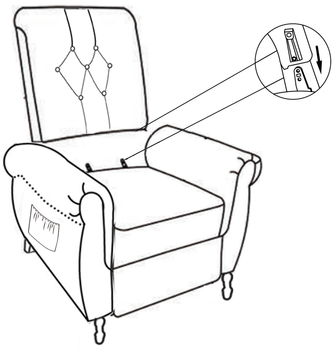

**STEP 3**

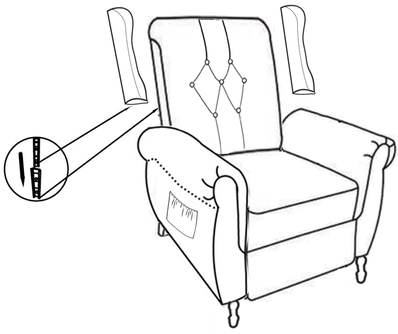



## Massage Pushback Chair Assembly Instruction

**STEP 4**

No.1 and No.2 wire connect with the backrest and chair base.
No.3 wire connects with backrest and power cord(D).
No.4 wire connects with backrest and remote control(E).

NOTE: Two same color wires connect.

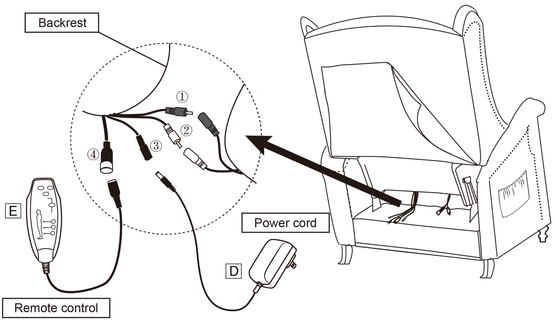




## Massage Pushback Chair Assembly Instruction

### How to use remote control?

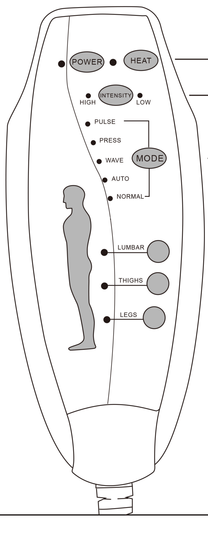


- POWER : Turn on/off remote control
- HEAT : Turn on/off heat function for lumbar part only.
- ITENSIITY : Control massage funcion from low to high
- MODE : Choose one massage mode you like(pulse, press,wave,auto, normal)
- You can choose 1-3 massage parts(lumbar, thighs, legs)to enjoy.