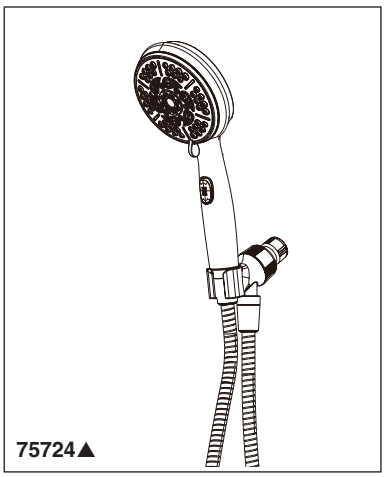

see what Delta can do℠

HAND SHOWER

■ 7-Spray Setting Hand Shower

FEATURES:

- Touch-Clean® Spray Holes

STANDARD SPECIFICATIONS:

- Max flow rate 2.5 gpm @ 80 psi, 9.5 L/min @ 550 kPa
- Hand shower with seven spray settings - pause is a non-positive shut-off
- Push-button activates pause
- Easy-turn dial to change hand shower sprays.
- Fits standard 1/2"-14 NPT pipe fitting
- Adjustable shower arm mount allows for hands-free showering
- 72" (1829 mm) metal hose (Chrome and SN finishes only)
- 72" (1829 mm) UltraFlex® hose (RB finish only)
- 7 Spray settings include: Full Body spray, Full Spray with Massage, Massaging spray, Shampoo Rinsing spray, Shampoo Rinsing spray with Massage, Drenching spray, and Pause

WARRANTY:

- Parts and Finish – Lifetime limited warranty; or for commercial purchasers, 10 years for multi-family residential (apartments and condominiums) and 5 years for all other commercial uses, in each case from the date the product is received by the original purchaser or their authorized representative (installation contractor, etc.).
- Please go to www.deltafaucet.com for the complete details of our limited warranty.

COMPLIES WITH:

- ASME A112.18.1 / CSA B125.1

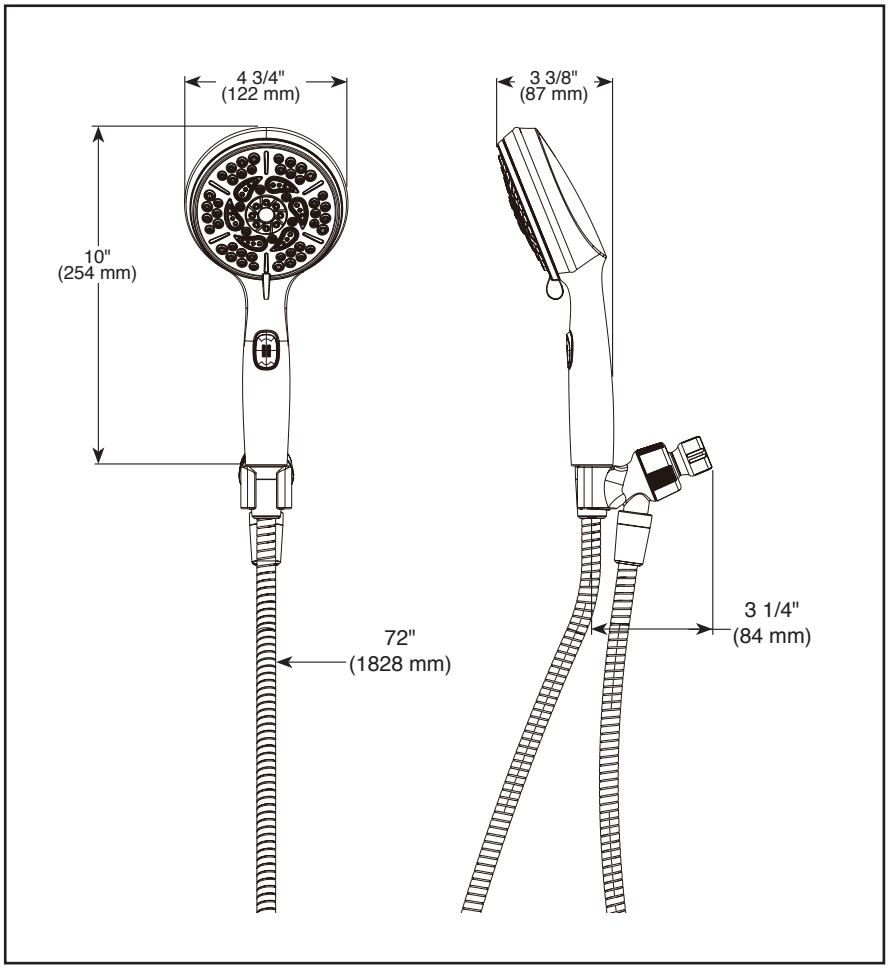

▲ Designate proper finish suffix

Delta Faucet Company reserves the right (1) to make changes in specifications and materials, and (2) to change or discontinue models, both without notice or obligation. Dimensions are for reference only. See current full-line price book or www.deltafauet.com for finish options and product availability.

DSP-B-75724 Rev. B

Delta Faucet Company
55 E. 111th Street, Carmel, IN 46280
350 South Edgeware Road, St. Thomas, ON N5P 4L1
© 2025 Delta Faucet Company