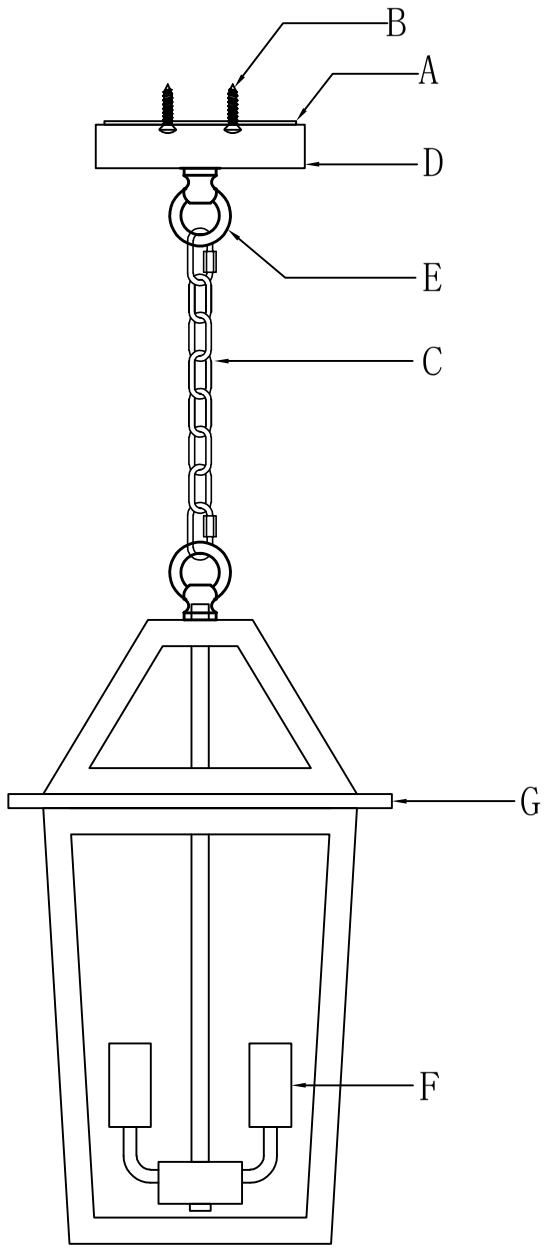

instruction for installation

A		Hanging board	1
B		Hanging plate screw	4
C		chain sling	1
D		Ceiling disk	1
E		rings	2
F	E14 lamp holder		3
G	Lamp body		1

1. Take out all accessories and wear gloves.
2. Assemble the lamp body with the hanging chain and ceiling tray as shown.
3. Fix the hanging plate to the ceiling, then connect the main line of the lamp body with the reserved wire of the ceiling, and install the ceiling suction plate to fix it.