AX1	BX1	CX1	DX1
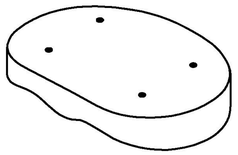	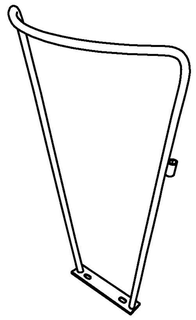	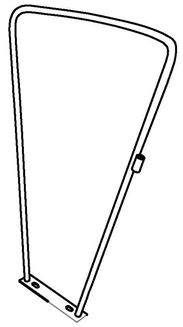	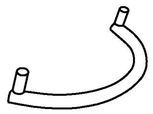

H1X4	H2X4	T1	EXTRA HARDWARE
			H1 - 2pc H2 - 2pc
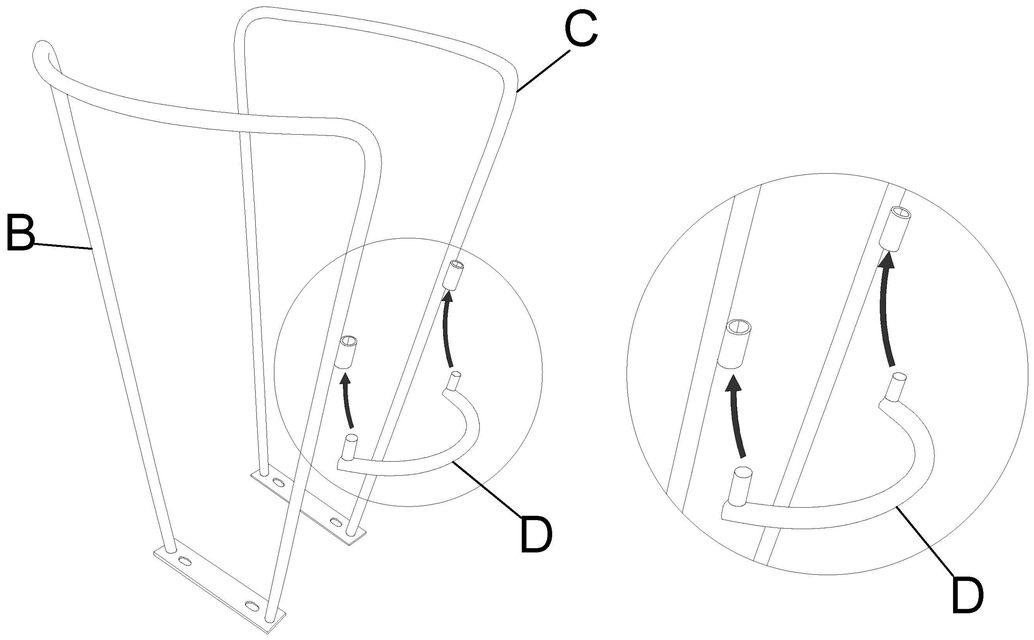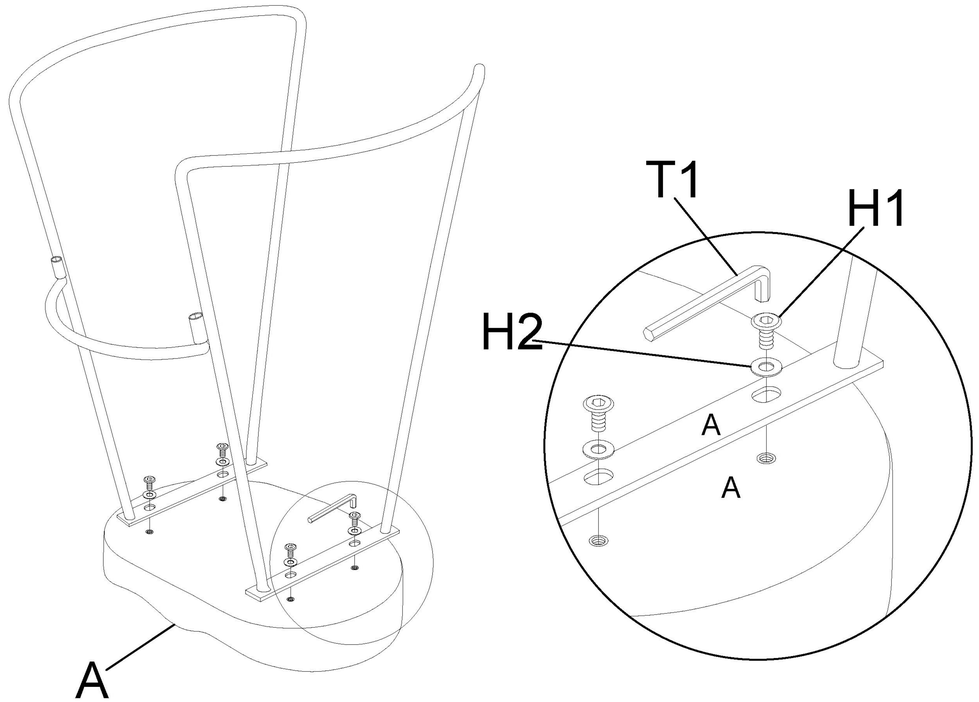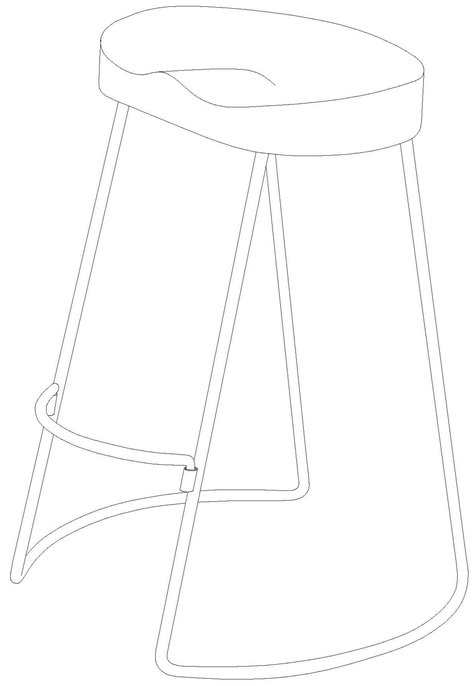
Note: 1. Please do not tight any bolt unless all bolts are fixed at their respective places.
2. After fixing the bolts tighten them simultaneously.
3. Matching Parts Bolt (example AtoA)
4. Two person assembly required.