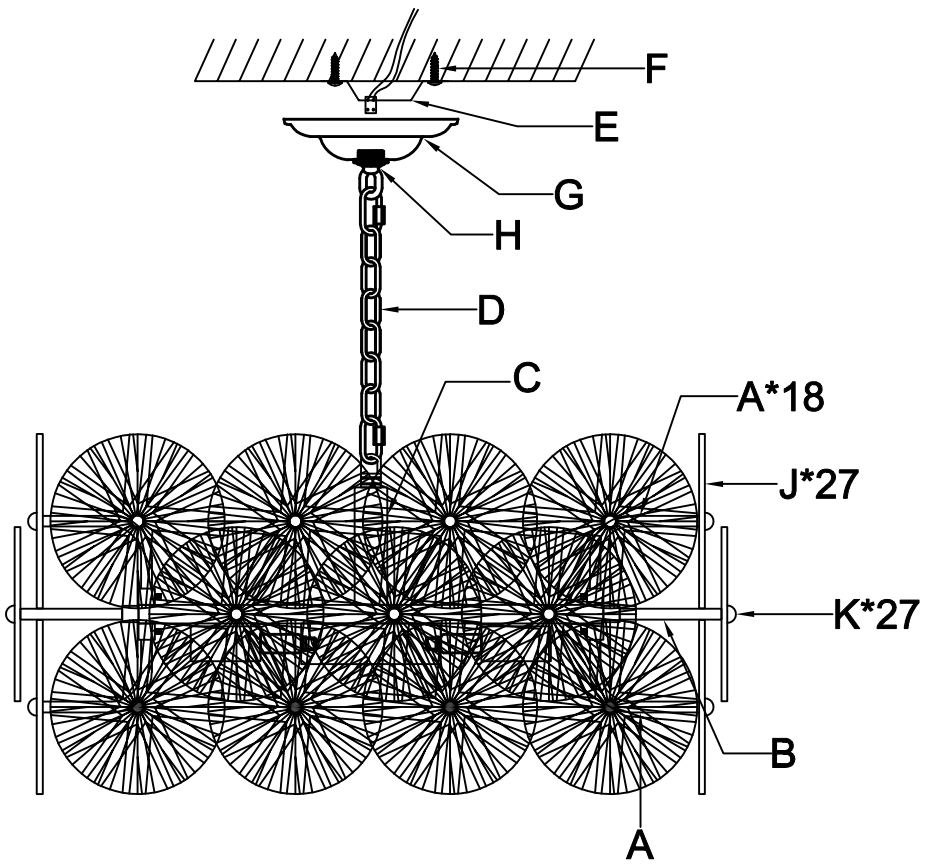

1.Take out all lamp fittings and wear gloves.
2.Install the lamp arms A and B to the lamp body respectively as shown in the figure, and adjust the direction before use.Fix the machine screw.
3.Install the hanging board to the ceiling, and then reserve electricity for the main line of the lamp body and the ceiling.Connect the wires, install the ceiling tray and fix it.
4.Install the glass sheet on the A lamp arm first, and then install the glass sheet on the B lamp arm.

instruction for installation

A	Elbow lamp arm	18
B	Straight tube lamp arm	9
C	19*100 connecting pipe	1
D	chain sling	1
E	Hanging board	1
F	Hanging plate screw	3
G	American hanging bell	1
H	rings	1
J	The required number of glass sheets is 27, and the number of spare parts is 29. (2 pieces for standby)	
K	15 beautiful spheres	27