HAPPINESS
INSTALLATION

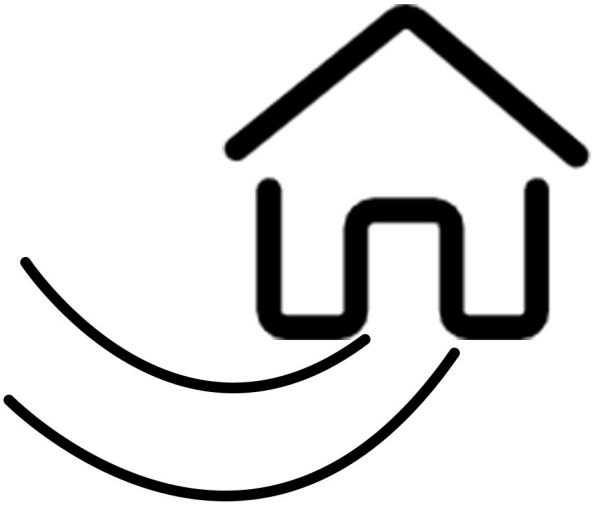

- If you have any questions with the product, please contact us by:
- **Email: customerservice@zoy-living.com**
  (we will reply to you within 24 hours)

Assembly Instructions

RR9835BF53

Your recliner comes packaged in **One** boxes. Carefully remove all of components from the packaging and set aside for assembly.

CAUTION

DO NOT use any sharp objects to open plastic wrapped components as this may result damage to product or components .

Package Contents

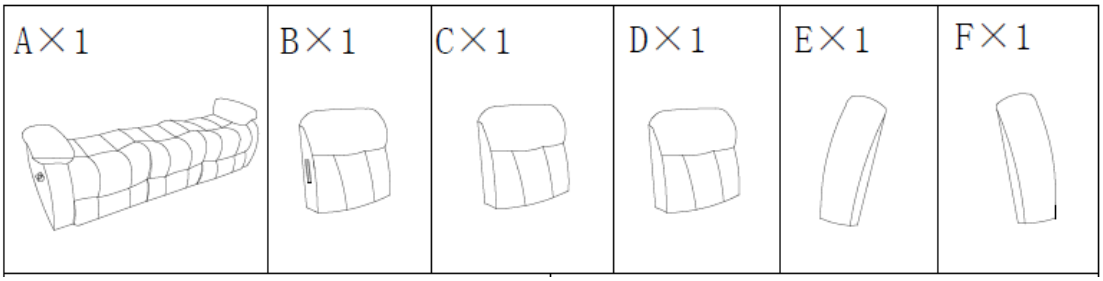

Step 1:

Insert the pins of **Backrest (B)** , **Backrest (C) and Backrest(D)** into **Seat (A)** and verify it fits perfectly. (Need to confirm that it is firm before use)

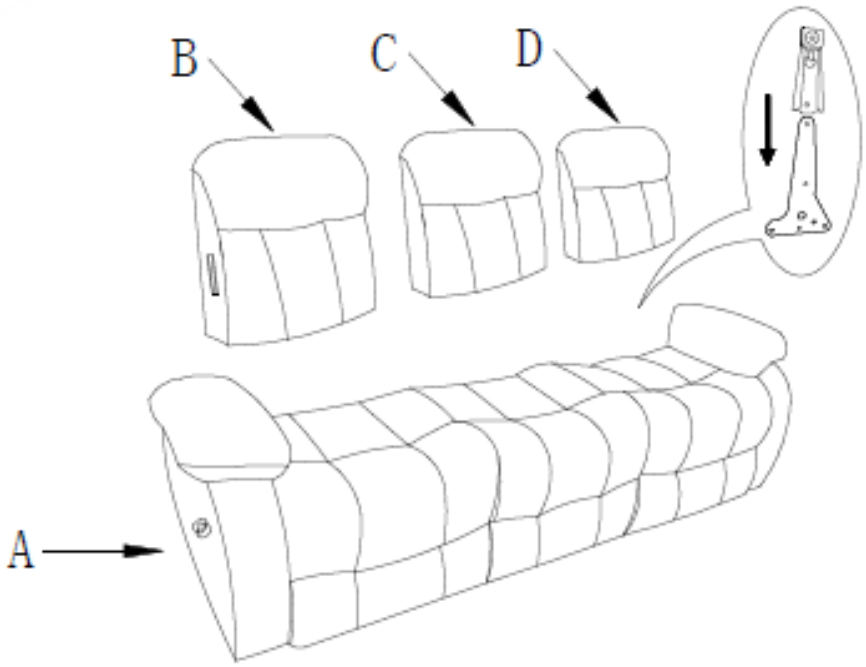

Step 2:

Insert the pins of **Ear(E)** and **Ear(F)** into **Backrest**s(Need to confirm that it is firm before use)

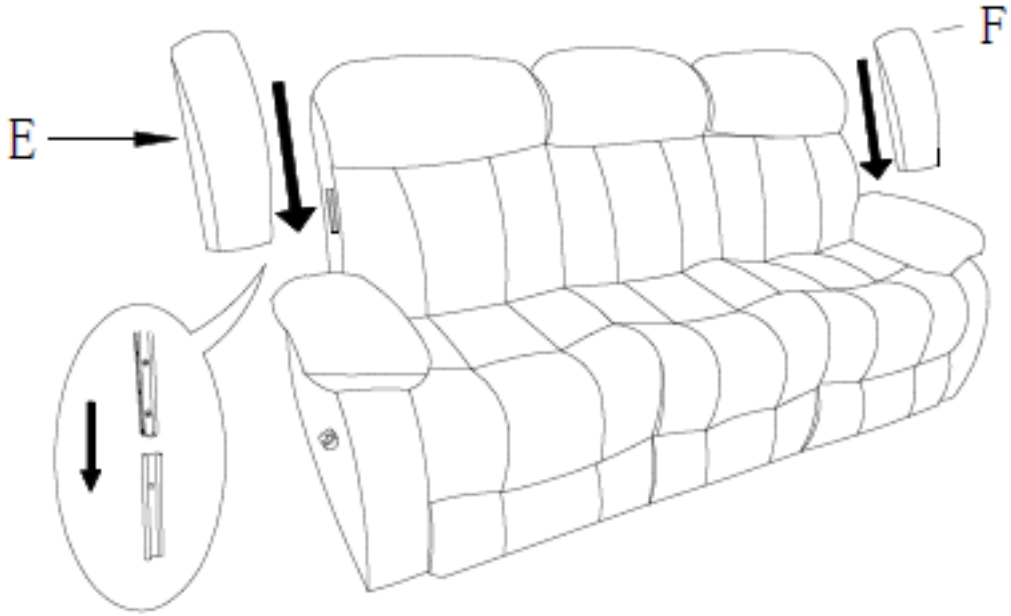

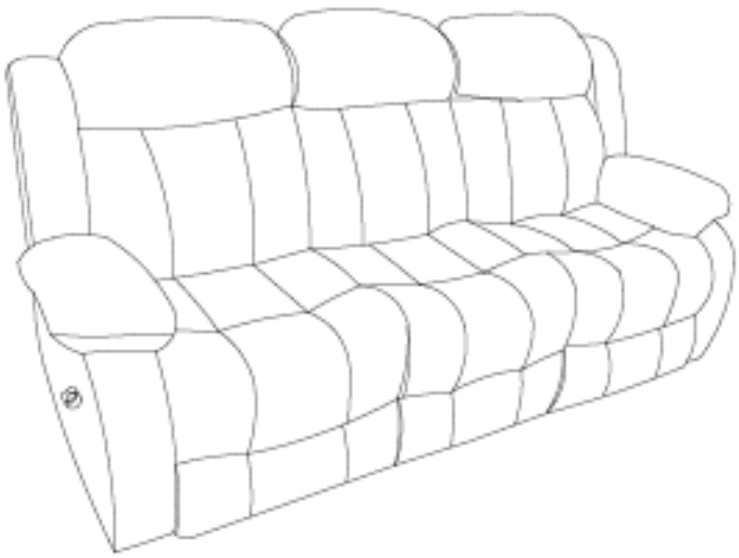

Warnings

1. Please check if the components of the chair are all included and can be used normally.
2. Assemble all components according to the instruction correctly before you connect the chair to the power.
3. Please DO NOT sit on the armrests or footrest to eliminate the risk of tipping over.
4. If the chair is damaged or doesn't match the website description, please send clear pictures of the product and label of the carton to our service team for further help.
5. If the recliner doesn't work, you may try the following measures for self-checking firstly:
   a) Check if all the cables are connected;
   b) Check if the light of transformer is on.

   If the chair still doesn't work, please feed the information back to our customer service in time and we'll help you solve the matter as soon as possible.
6. If you have any questions with the product, please contact us by:
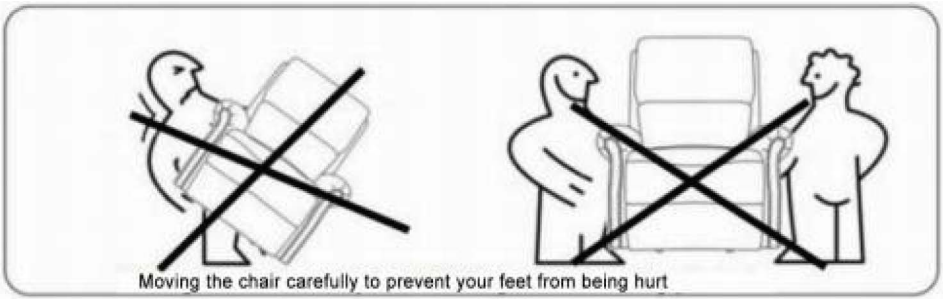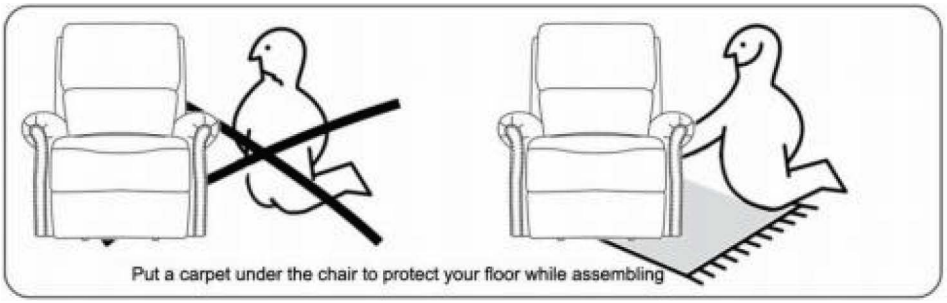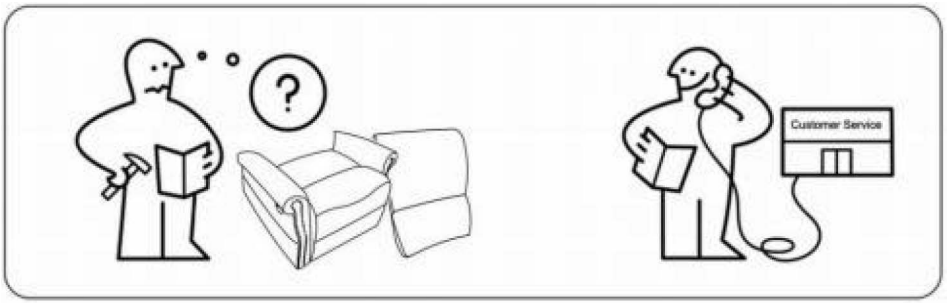
   Email: **customerservice@zoy-living.com**(we. will re.ply to you within 24 hours)