INSTALLATION
Product Manual

Version: 740001US-01-26A-AA

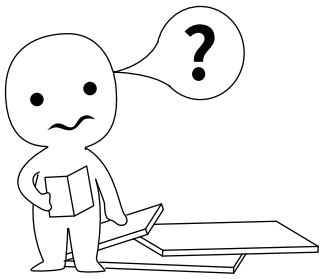

IMPORTANT INFORMATION!

please read the entire manual before starting to assemble and/or using this product.follow the manual thoroughly and keep it for further reference.

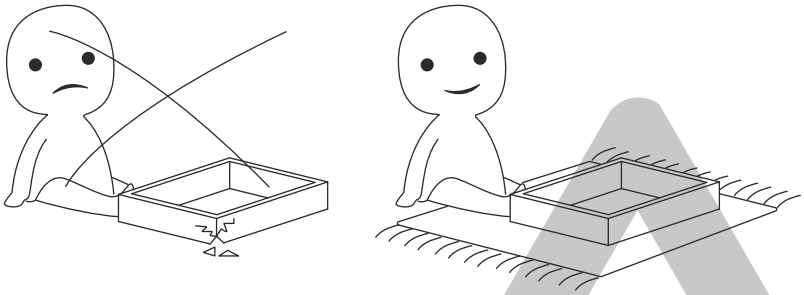

AVOID SCRATCHES!

In order to avoid scratching this furnuture should be assembled on a soft layer-could be a rug.

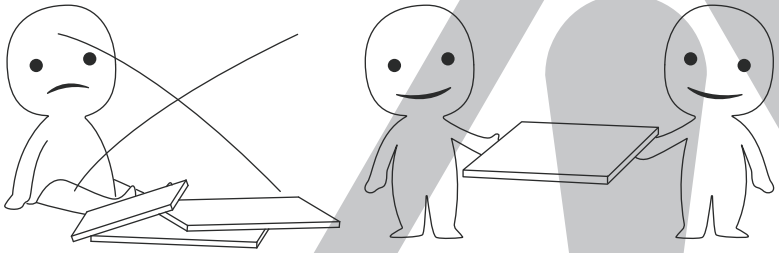

IMPROVE EFFICIENCY !

Try to find a partner to install with you, which can speed up the installation efficiency and shorten the time.

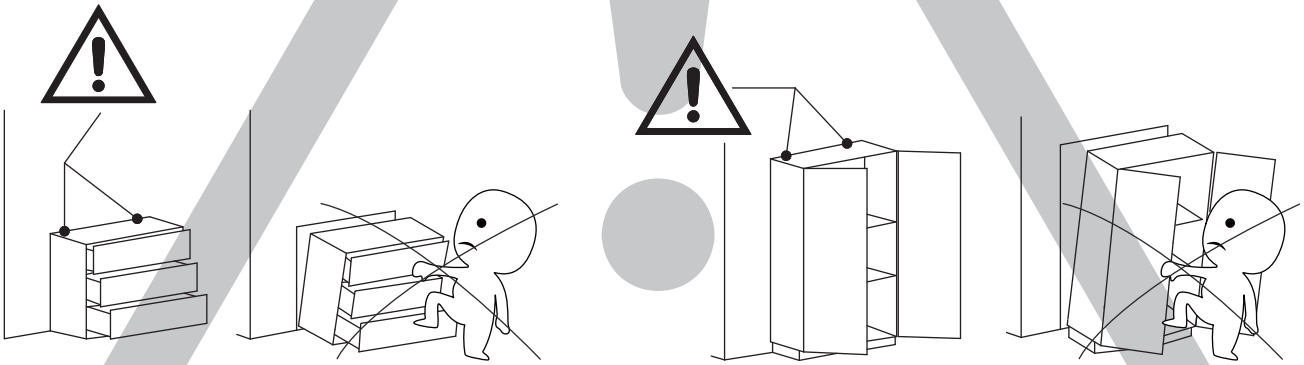

ANTI-TOPPLE WARNING !

Overturned furniture can cause serious or fatal crush injuries. To prevent tipping over, be sure to use the wall attachment, if not included with this product. Please purchase the wall attachment that fit your wall. If unsure, seek professional advice. Please read and follow each step of the instructions carefully.

IMPORTANT !

It is important that any product which is assembled using any kind of screw is re-tightened 2 weeks after assembly,and once every 3 months - in order to assure stability through-out the lifespan of the product.

For regular maintenance and cleaning of the product, for the frame, please use a rag dipped in neutral detergent to fully wipe it, and then dry it with a clean rag.For glass materials, wipe with a rag dampened with water glass cleaner, and then dry with a dry rag.

Do not use an electric screwdriver, and do not use too much force when installing, because the board is easy to break.

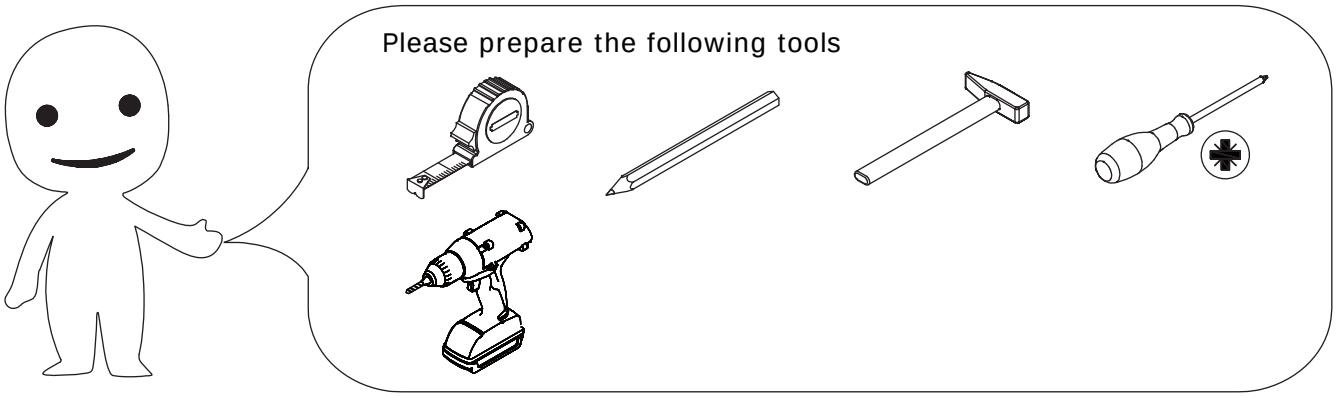

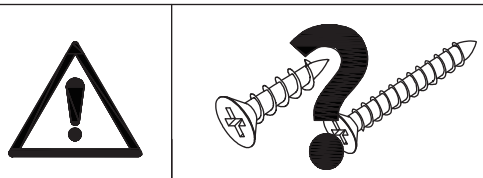

When installing, please carefully confirm whether each screw corresponds to the manual, accessories with similar shapes can be distinguished by size

A x 97	B x 97	C x 137	D x 68	E x 81
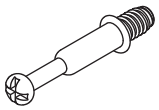 CRA0635B	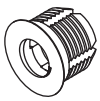	 CRB1595A	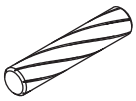 CRF0630A	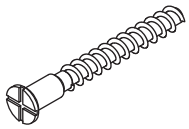 CRC0540A

F x 12	G x 12	H x 4	J x 26	K x 9
	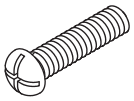 CRE0420A	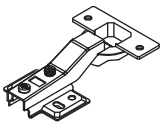 DGA861B	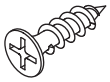 CRD3514A	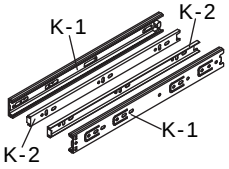 #3508 14''

L x 72	M x 20	N x 20	P x 4	Q x 25
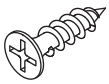 CRD3512A	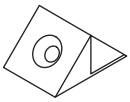	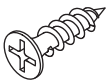 CRD0314A	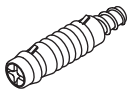	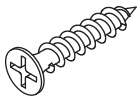 CRD3525A

R x 12	S x 40	T x 2	U x 2	V x 2
 CRF0620A	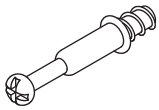 CRA0635A	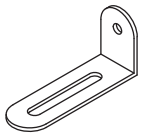	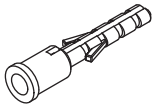	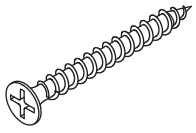 CRD3535A

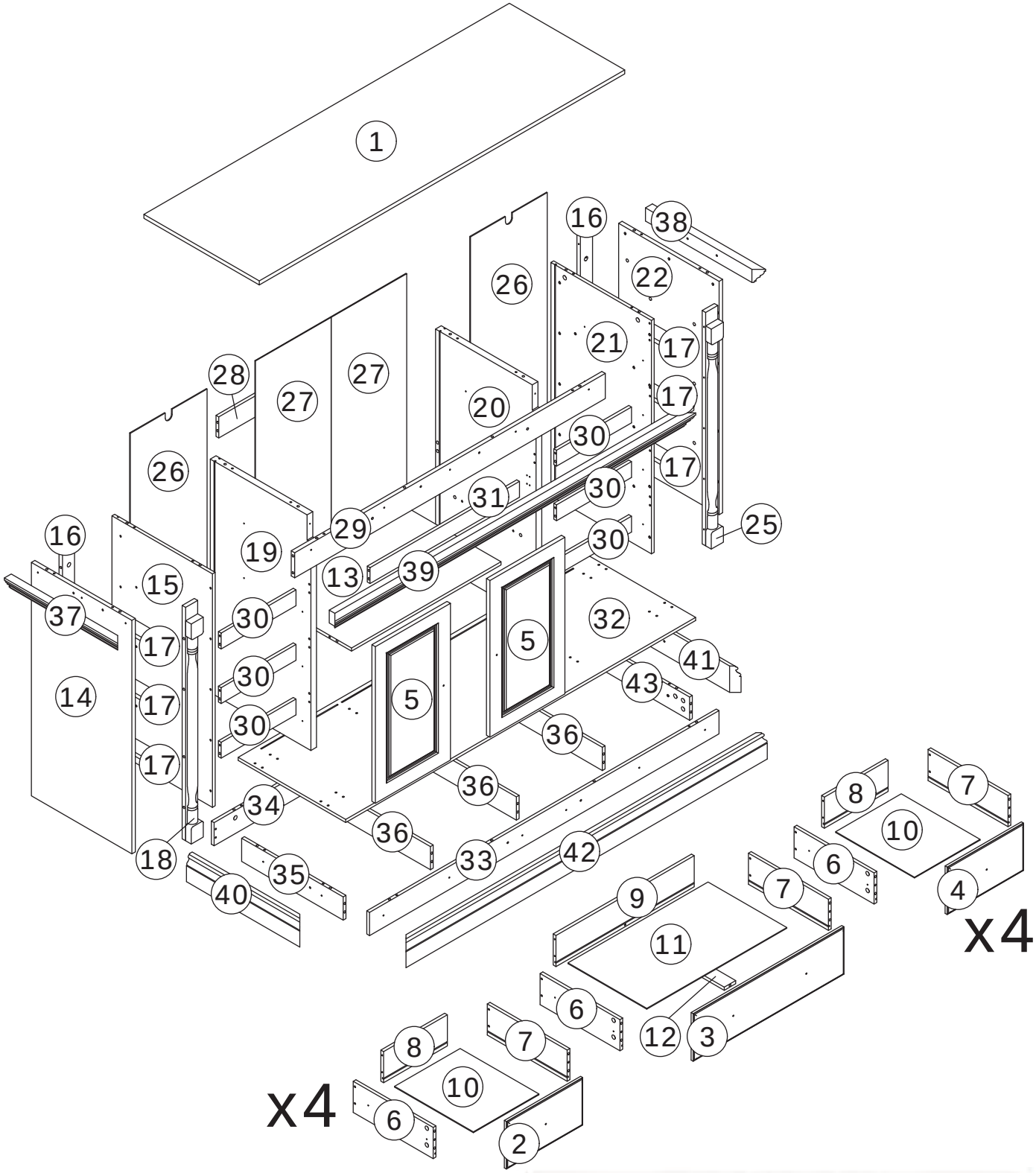

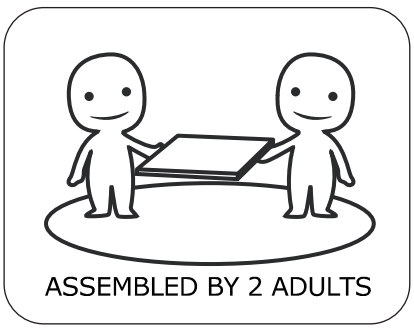
ASSEMBLED BY 2 ADULTS

⚠WARNING



Children have died from furniture tipover.To reduce the risk of furniture tipover:

- ALWAYS install Anti-tip device provided.
- NEVER put a TV on this product.
- NEVER allow children to stand,climb or hang on drawers,doors,or shelves.
- NEVER open more than one drawer at a time.
- Place heaviest items in the lowest drawers.

This is a permanent label.
Do not remove!

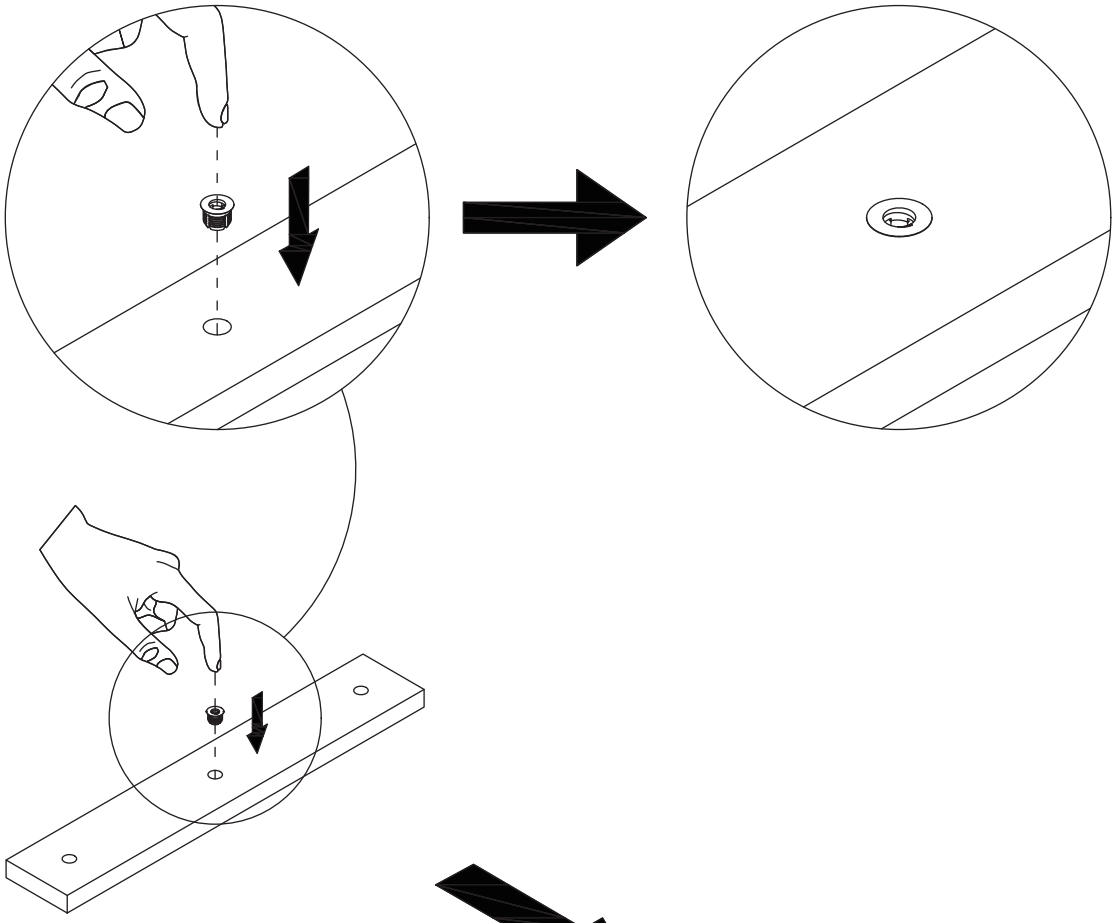

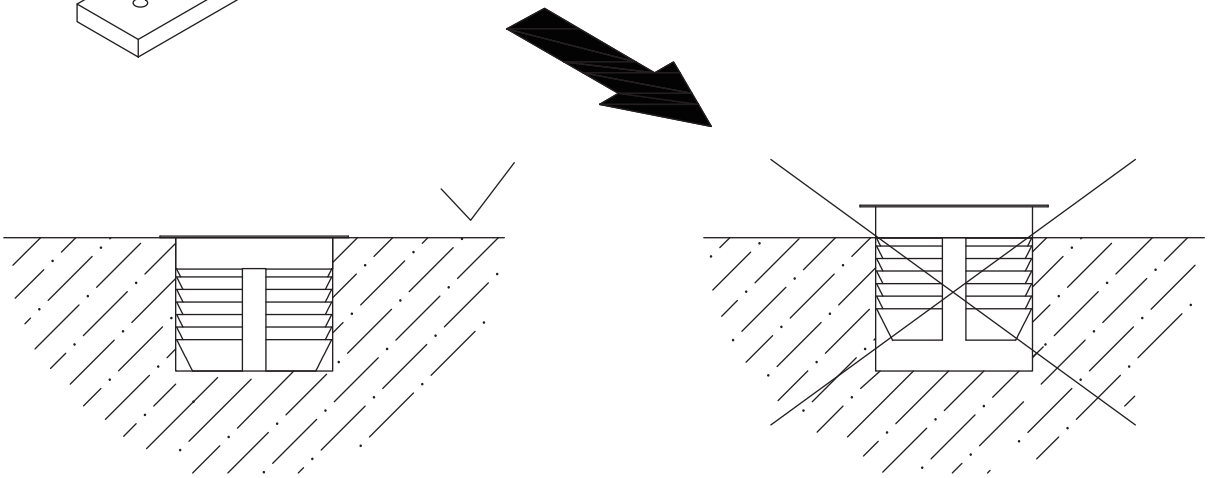

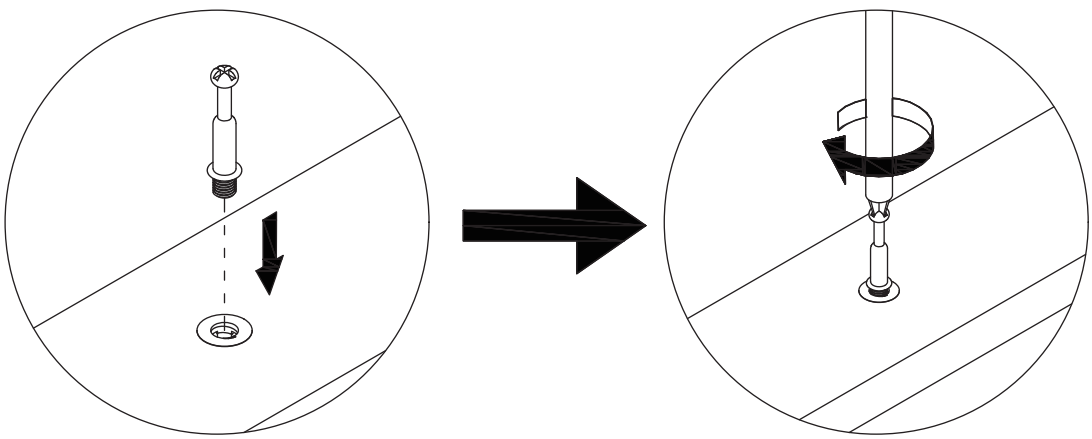

Slides Must Be Separated Before Assembly.
After Separated, Set Aside Until Needed for Assembly.

Las diapositivas deben separarse antes del montaje.
Después de la separación, déjelo a un lado hasta que sea necesario.

Les glissières doivent être séparées avant l'assemblage.
Après la séparation, mettez de côté jusqu'au moment de l'assemblage.

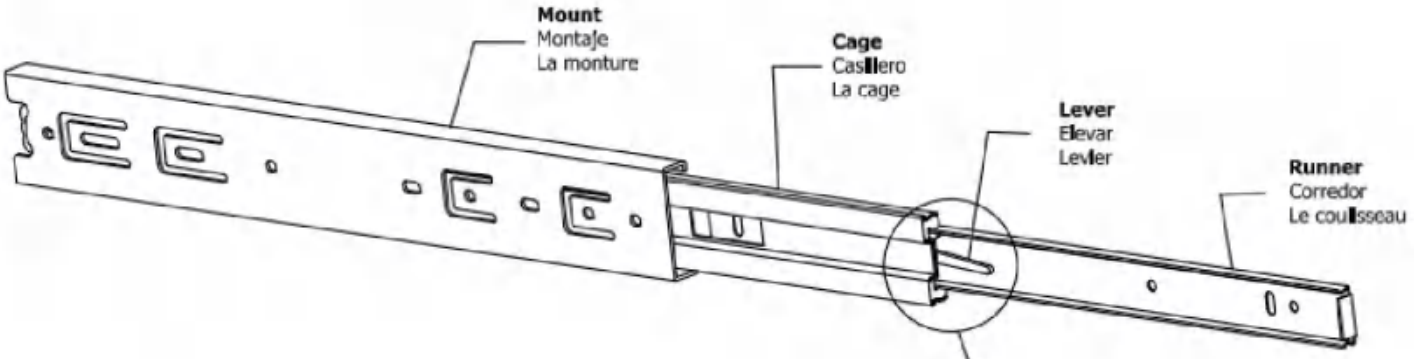

STEP 1: Extend Slide
Extender la diapositiva
Extendre la diapositive

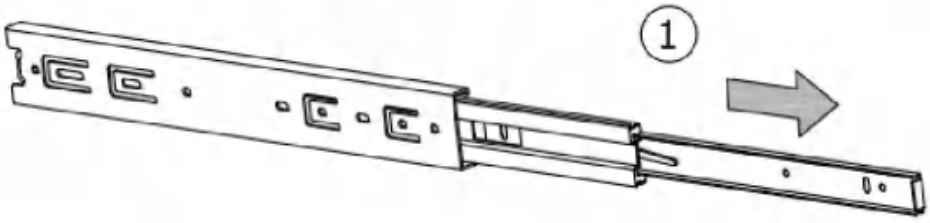

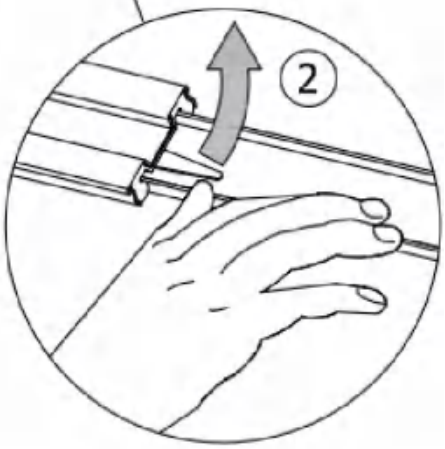

STEP 2: Push Lever UP
Empujar hacia arriba
Lever le levier

STEP 3: Remove Runner
Quitar el corredor
Enlever le coureur

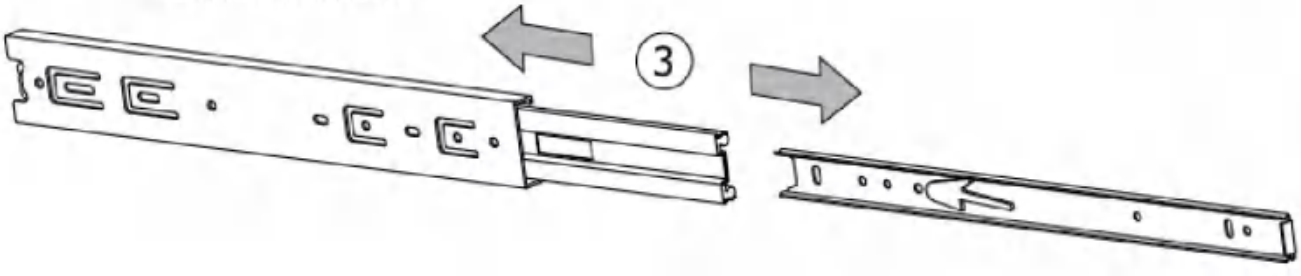

1

K x 5	L x 10	
K-1 #3508 14''	CRD3512A	

Secure slide rail (K-1) to **both sides of** panel 19 using screw (L).

	J	L	N
	CRD3514A	CRD3512A	CRD0314A

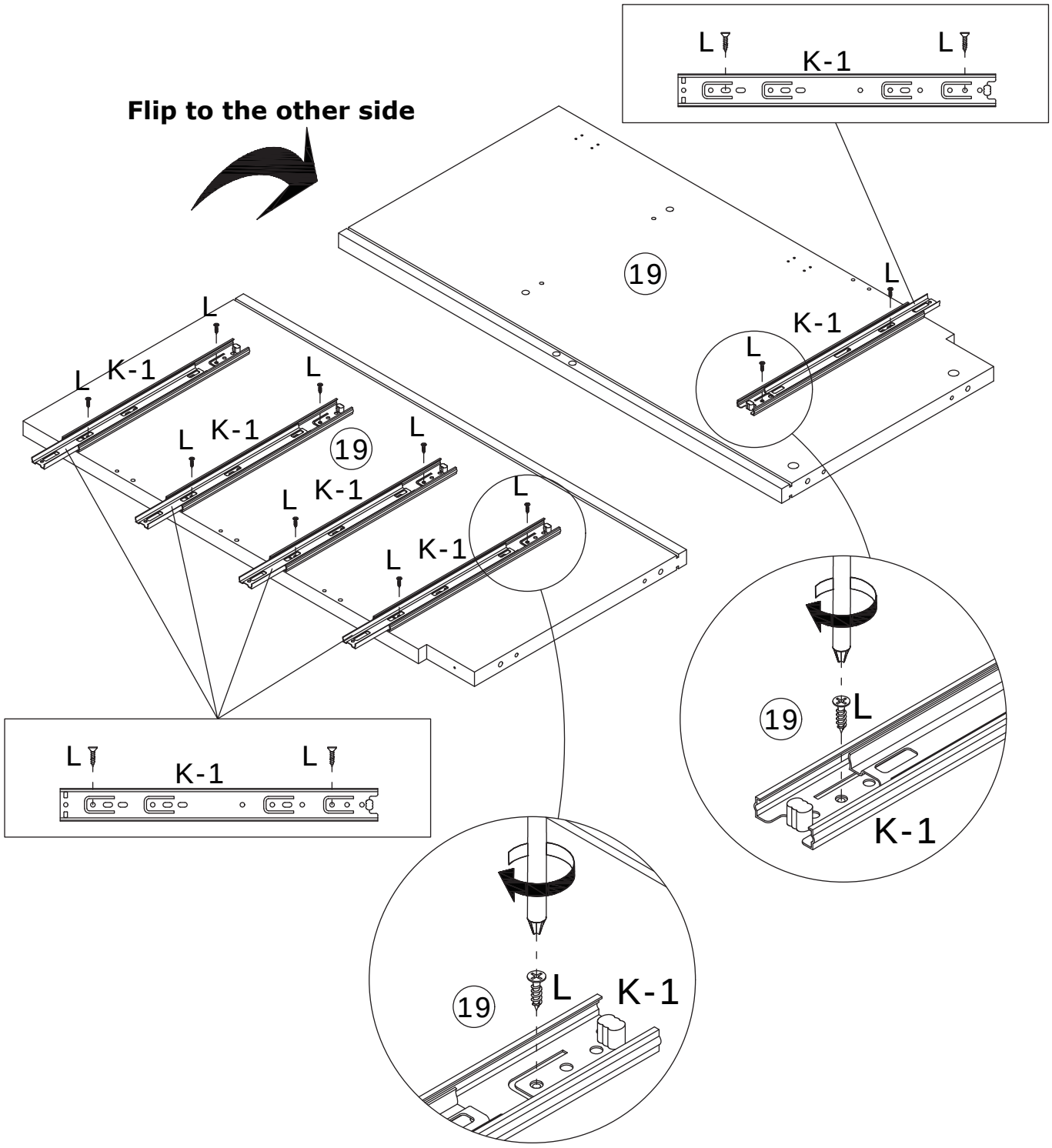

2

A x 4	B x 4	S x 2	
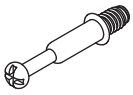 CRA0635B		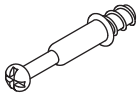 CRA0635A	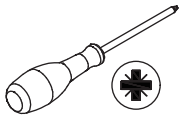

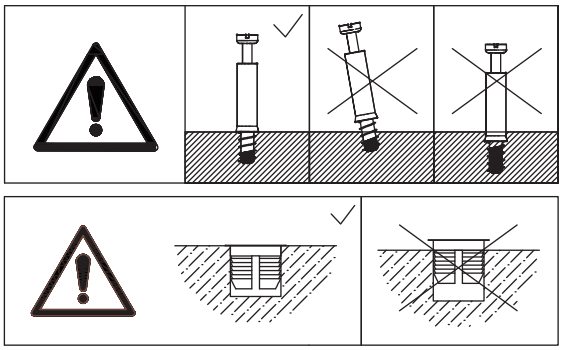

First, install plug (B) onto panel 19, then screw self-tapping rod **(A)** into panel 19.

Screw self-tapping rod **(S)** into panel 19.

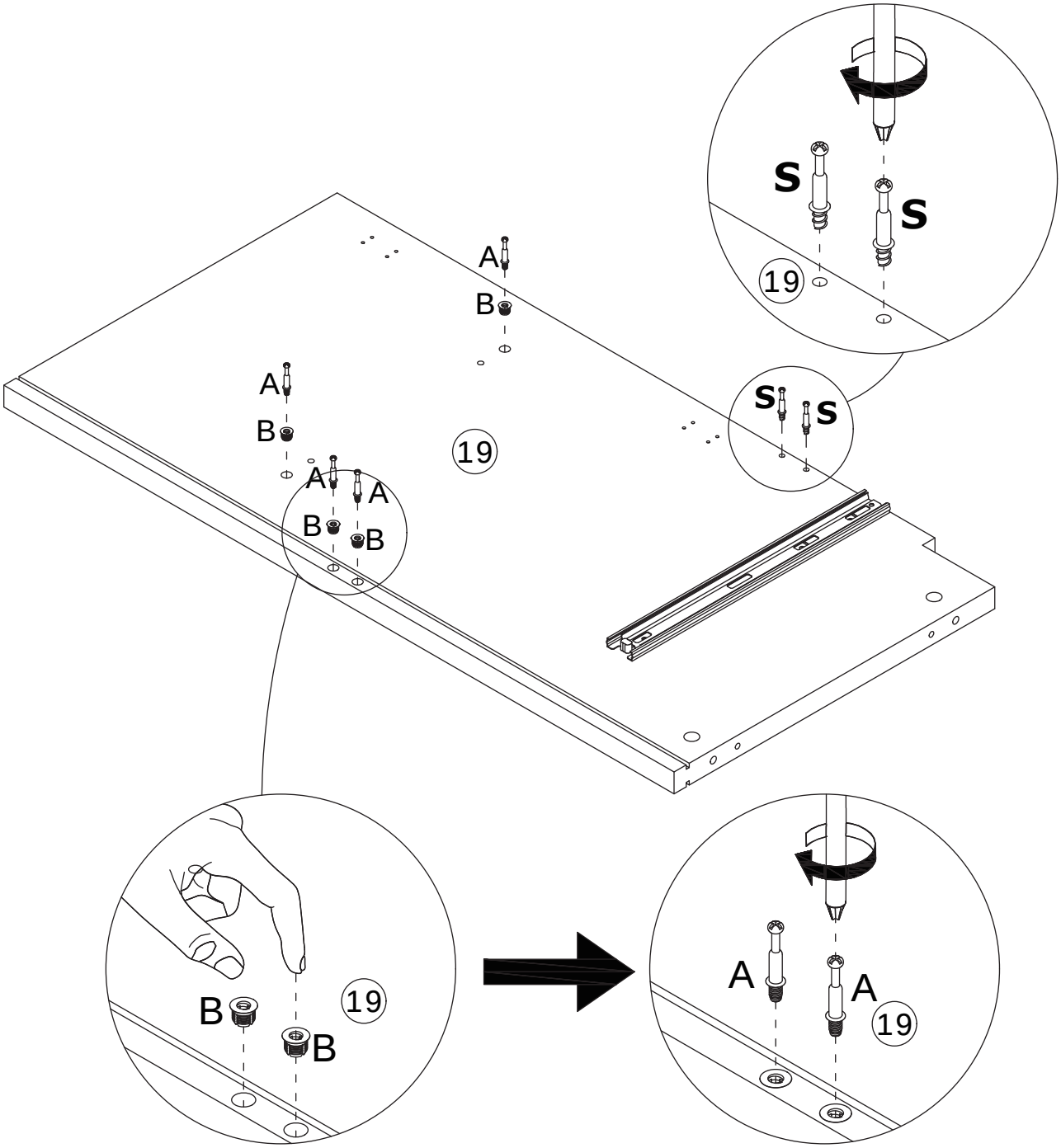

3

K x 5	L x 10	
K-1 #3508 14''	CRD3512A	

	J	L	N
	CRD3514A	CRD3512A	CRD0314A

Secure slide rail (K-1) to **both sides of** panel 20 using screw (L).

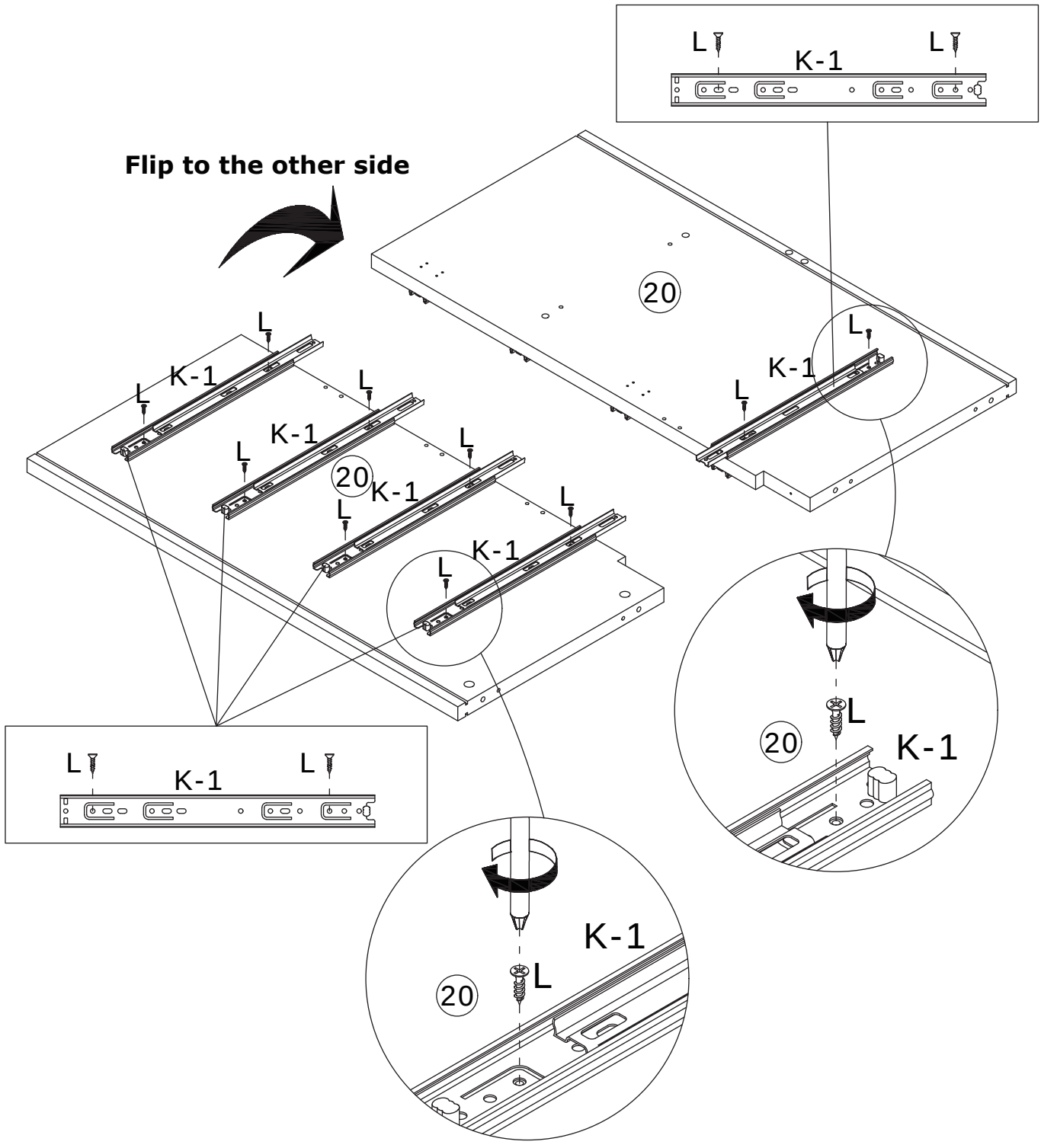

4

A x 4	B x 4	S x 2	
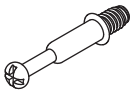 CRA0635B		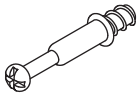 CRA0635A	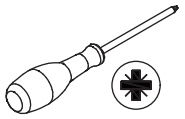

First, install plug (B) onto panel 20, then screw self-tapping rod **(A)** into panel 20.

Screw self-tapping rod **(S)** into panel 20.

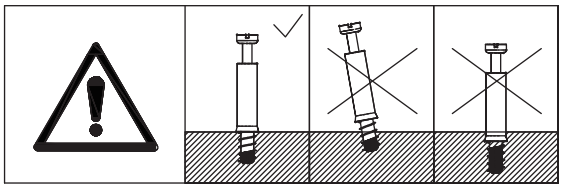

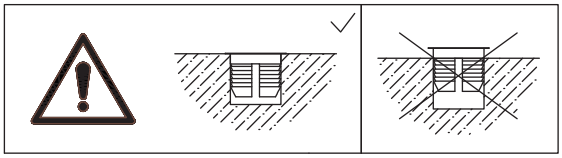

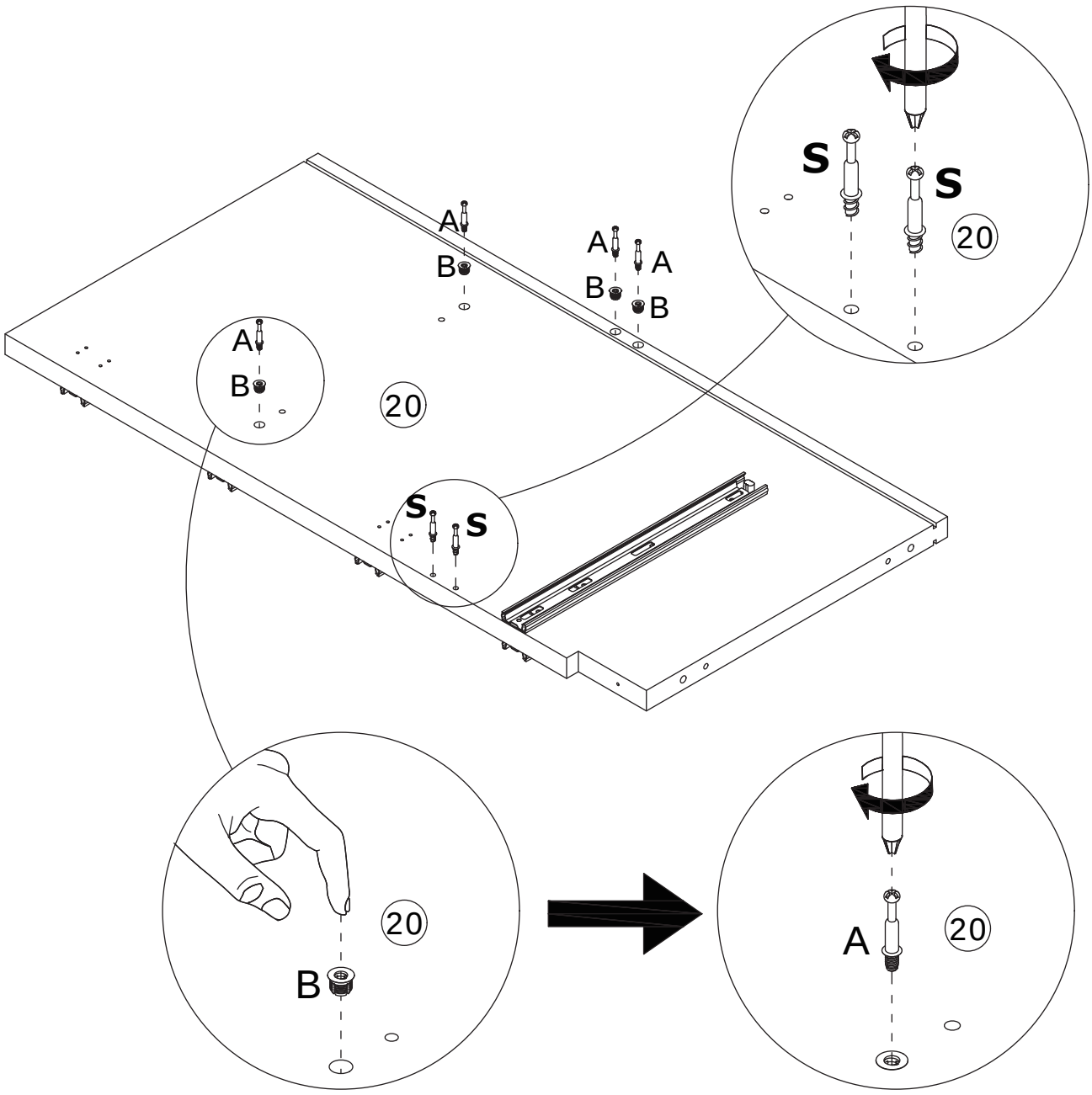

5

C x 6	D x 2	
 CRB1595A	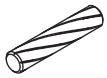 CRF0630A	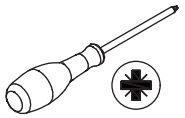

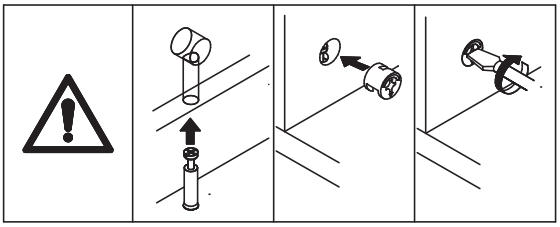

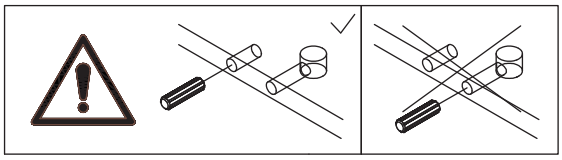

	D	R
	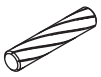 CRF0630A	 CRF0620A

Insert wooden dowel (D) into to panel 13. Connect panel 13, 28, and 31 to panel 19, then tighten by turning cam lock (C) clockwise.

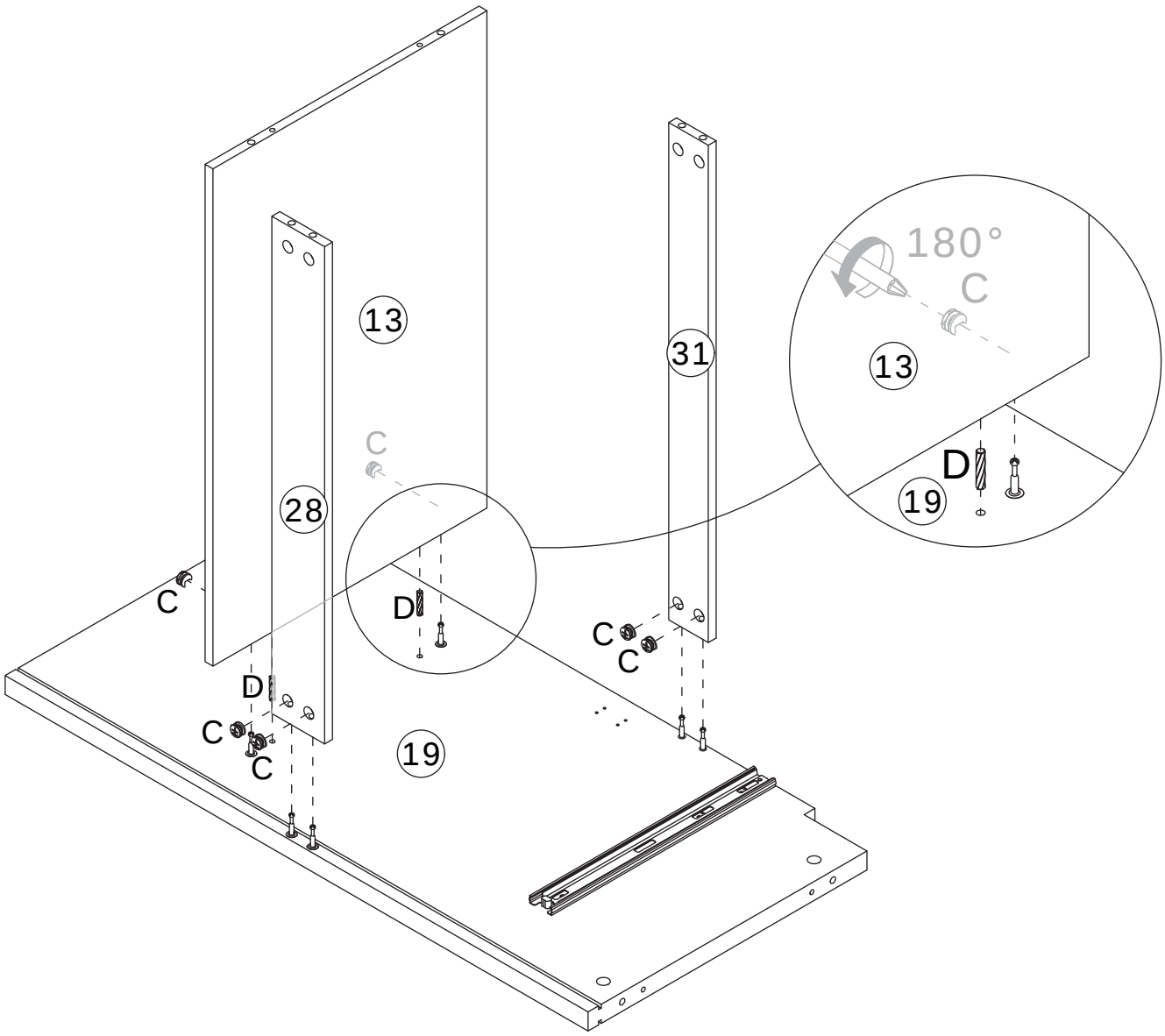

6

C x 6	D x 2	
 CRB1595A	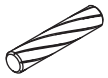 CRF0630A	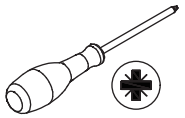

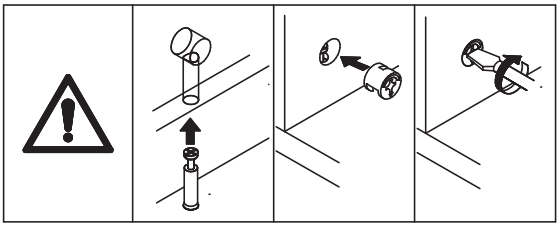

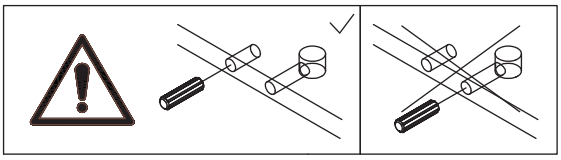

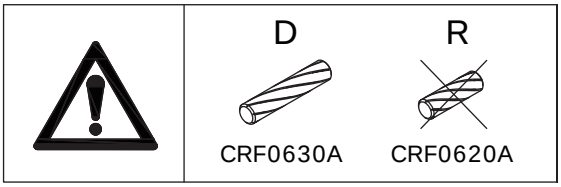

Insert wooden dowel (D) into to panel 13. Connect panel 13, 28, and 31 to panel 20, then tighten by turning cam lock (C) clockwise.

7

A x 14	B x 14	
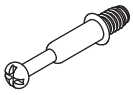 CRA0635B		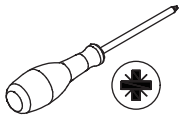

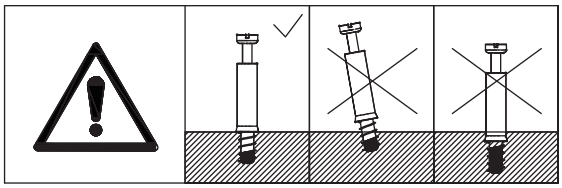

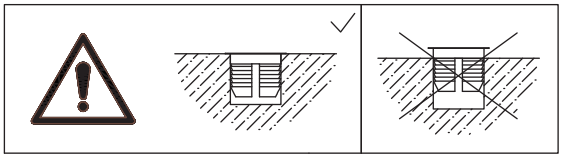

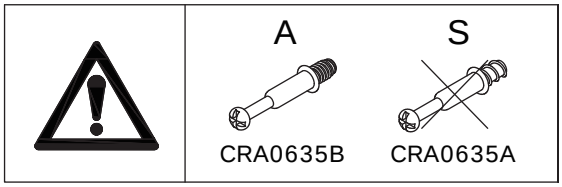

First, install plug (B) onto panel 22, then screw self-tapping rod (A) into panel 22.

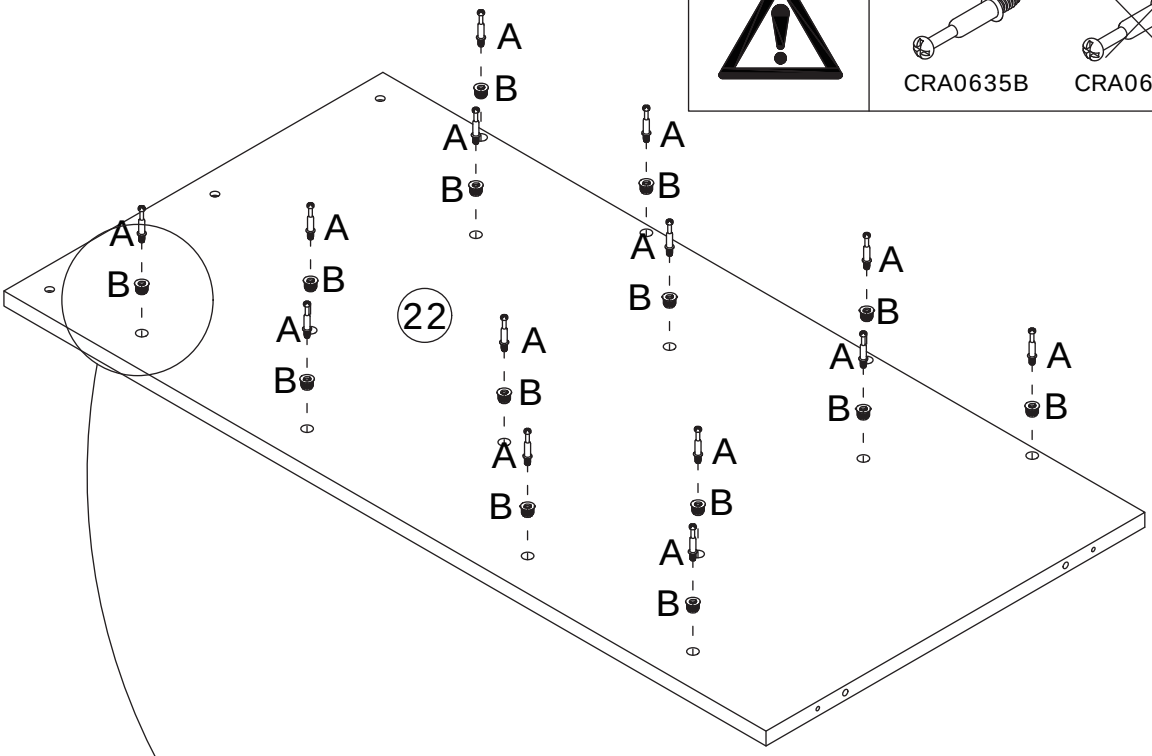

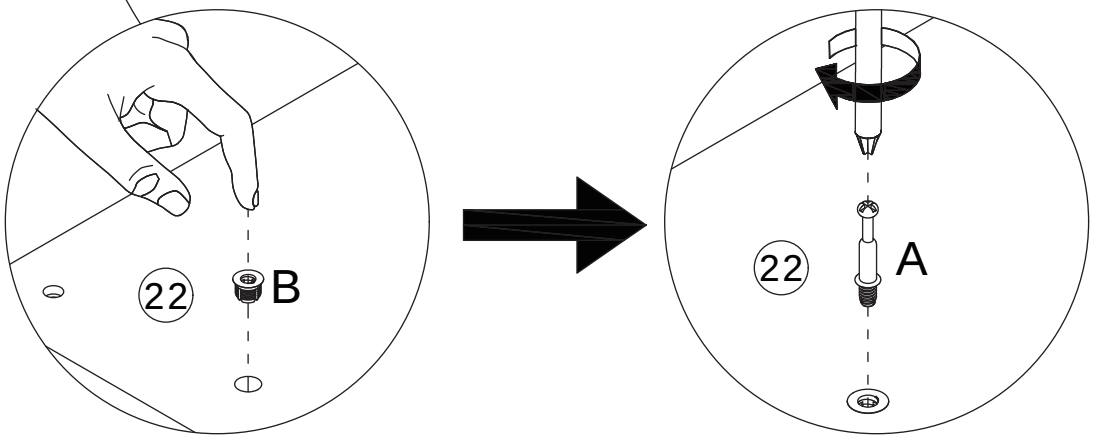

8

K x 2	L x 8	S x 5	
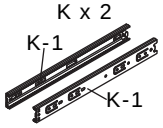 #3508 14''	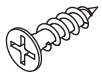 CRD3512A	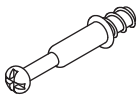 CRA0635A	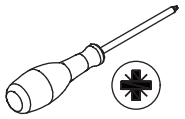

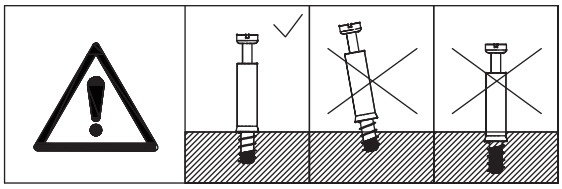

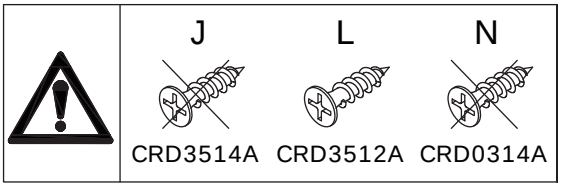

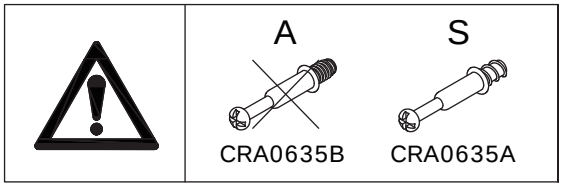

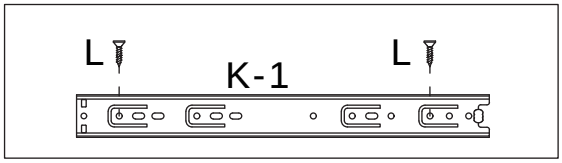

Secure slide rail (K-1) to panel 21 using screw (L).
Screw self-tapping rod (S) into panel 21.

9

Q x 3	R x 2	
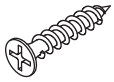		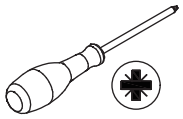
CRD3525A	CRF0620A	

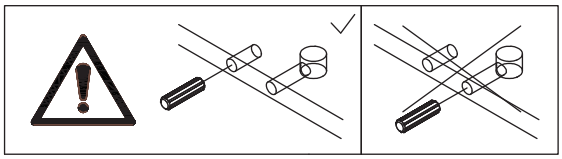

	D	R
	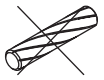	
	CRF0630A	CRF0620A

Connect panel 38 to panel 22 using wooden dowel (R) and secure them with screw (Q).

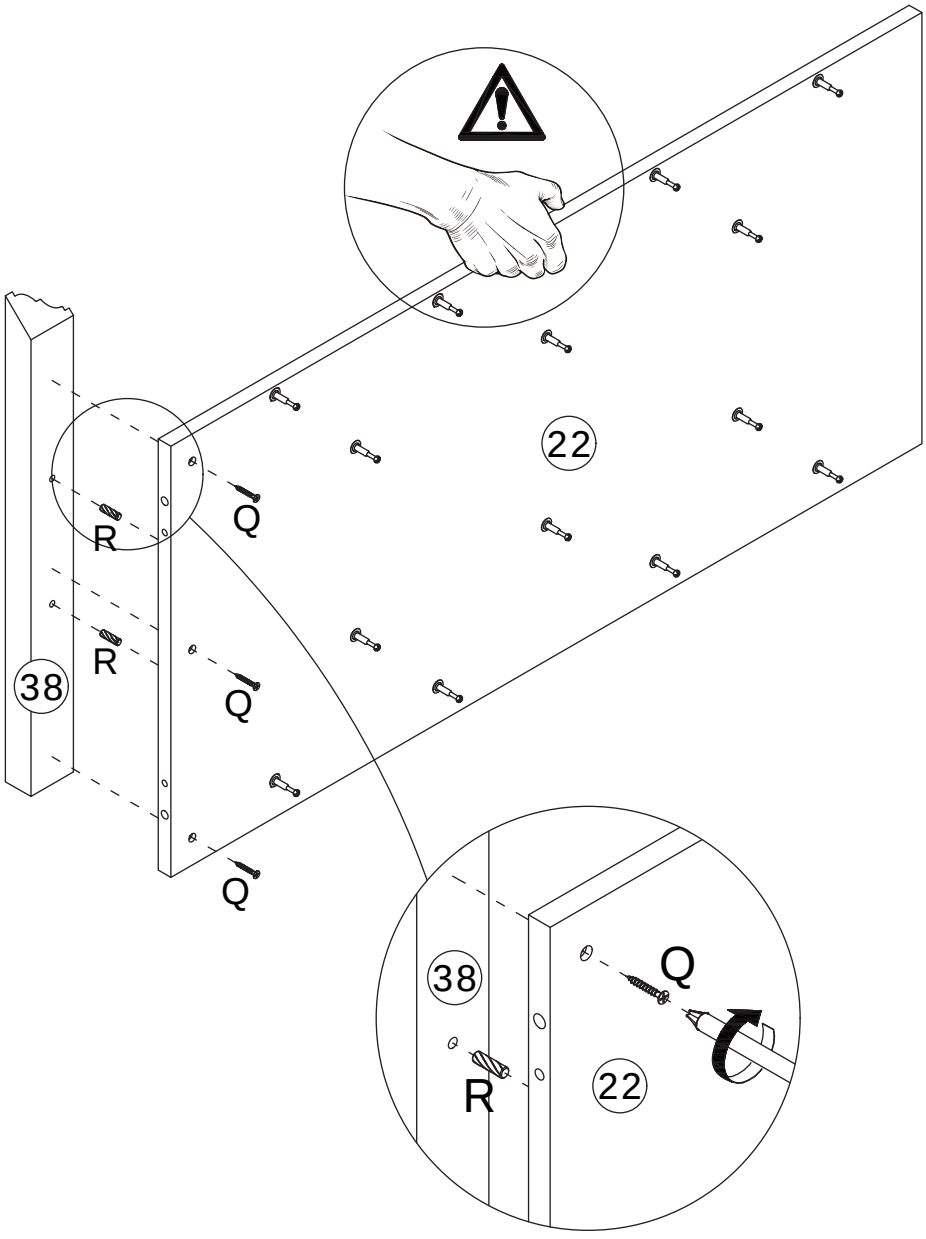

10

C x 6



CRB1595A

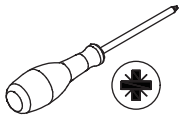

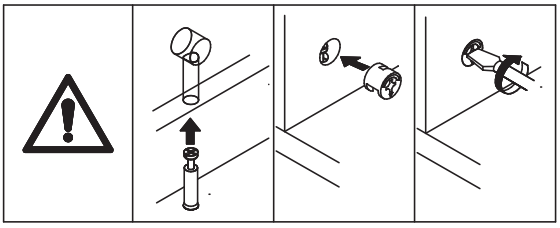

Connect panel 17 to panel 22, then tighten by turning cam lock (C) clockwise.

Be sure to check the orientation of panel 22 to prevent incorrect installation.

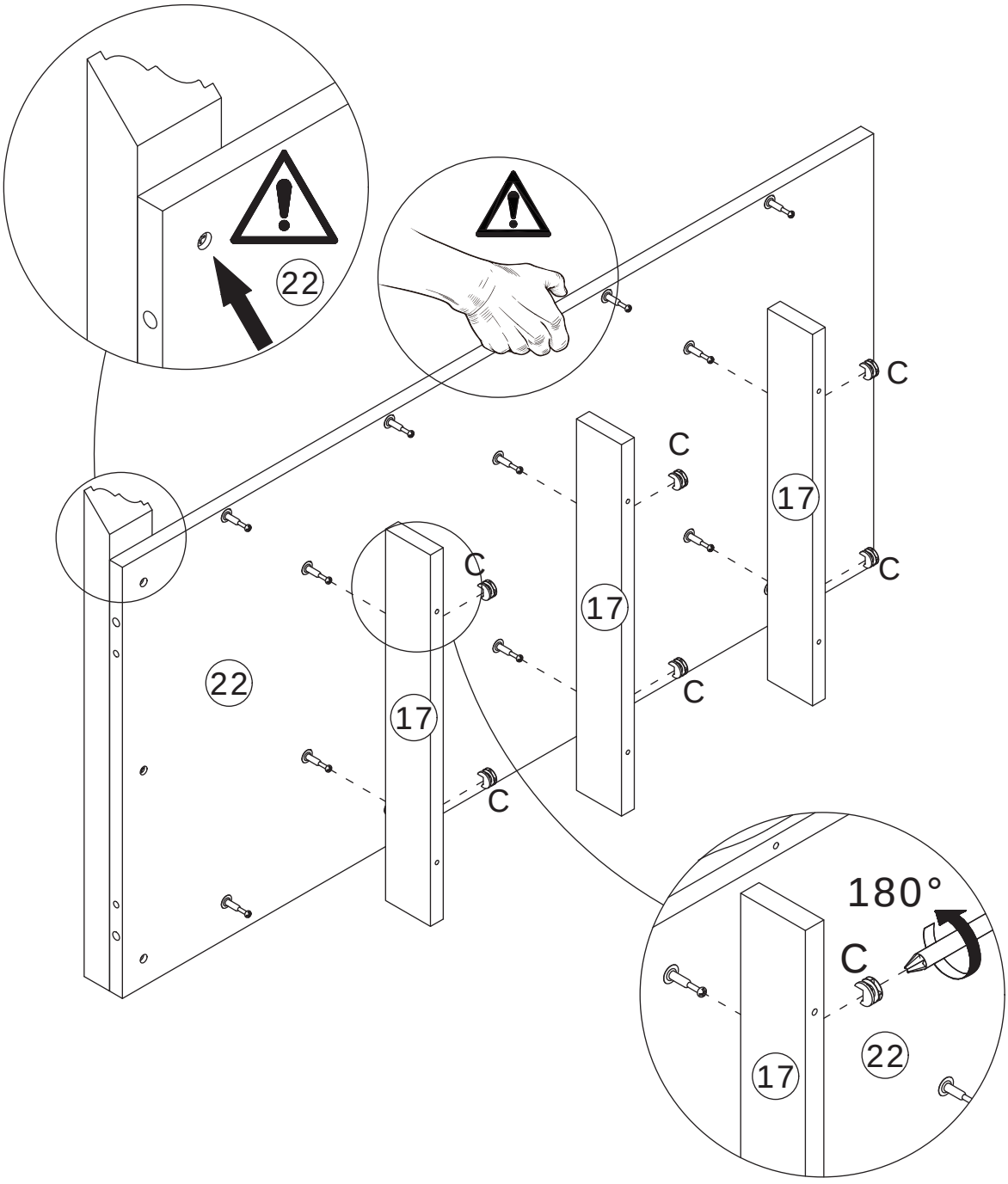

11

C x 8



CRB1595A

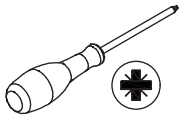

Connect panel 16 and 25 to panel 20, then tighten by turning cam lock (C) clockwise.

Be sure to check the orientation of panel 22 to prevent incorrect installation.

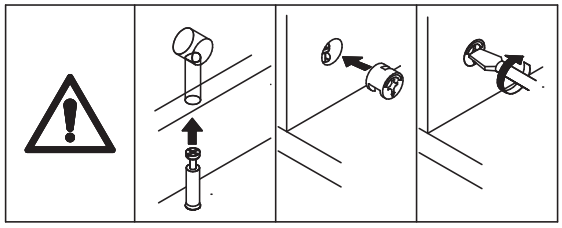

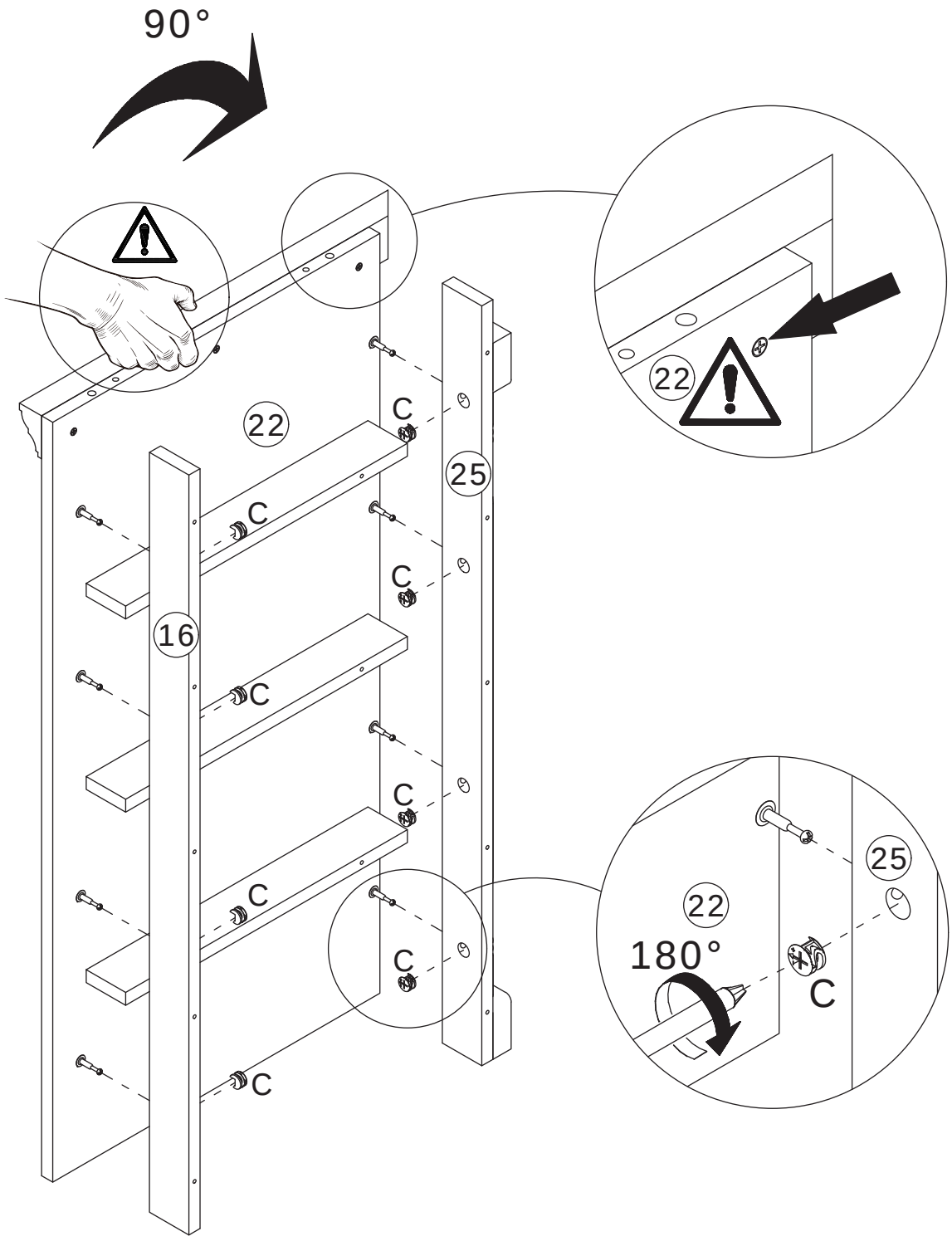

12

E x 16

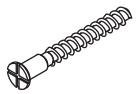

CRC0540A

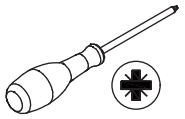

Connect panel 21 to panel 16, 17, and 25 using screw (E).

Be sure to pay attention to the orientation of panel 22 to prevent incorrect installation.

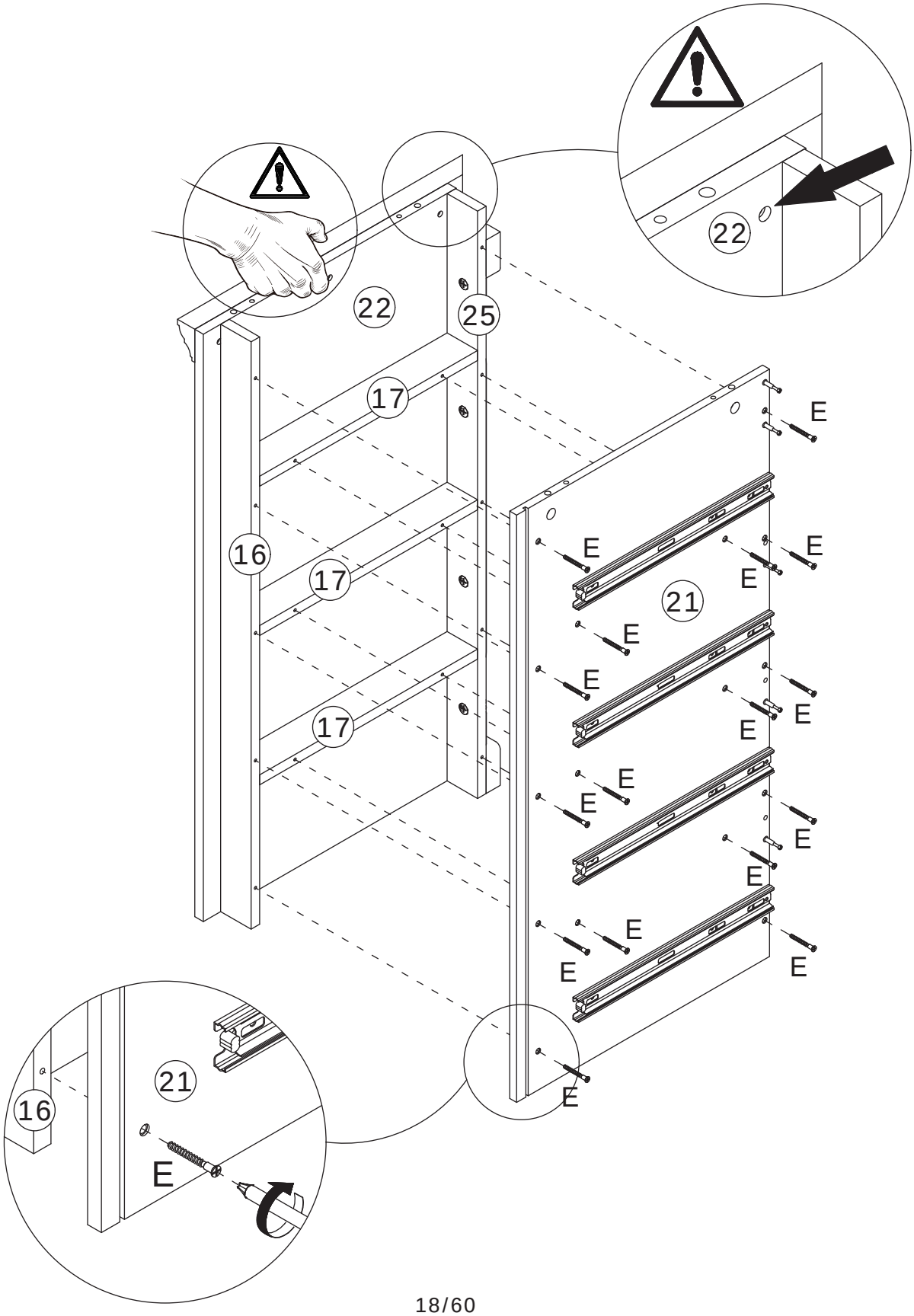

13

A x 14	B x 14	
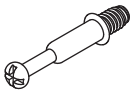 CRA0635B		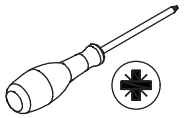

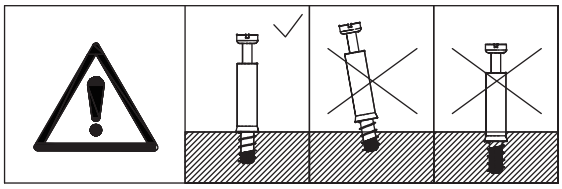

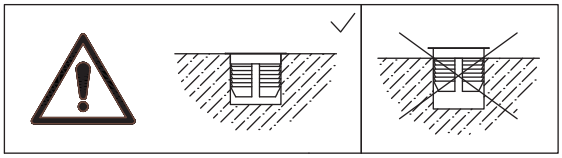

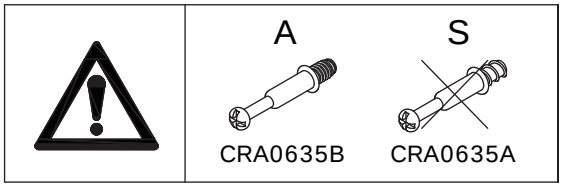

First, install plug (B) onto panel 14, then screw self-tapping rod (A) into panel 14.

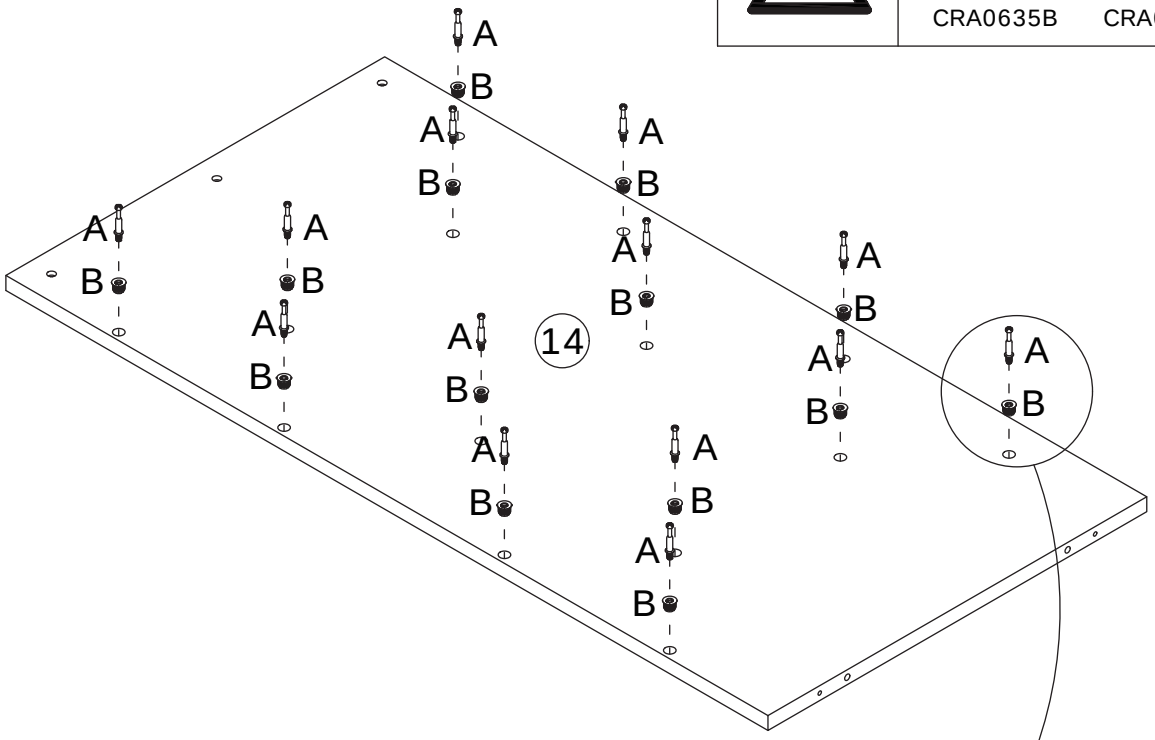

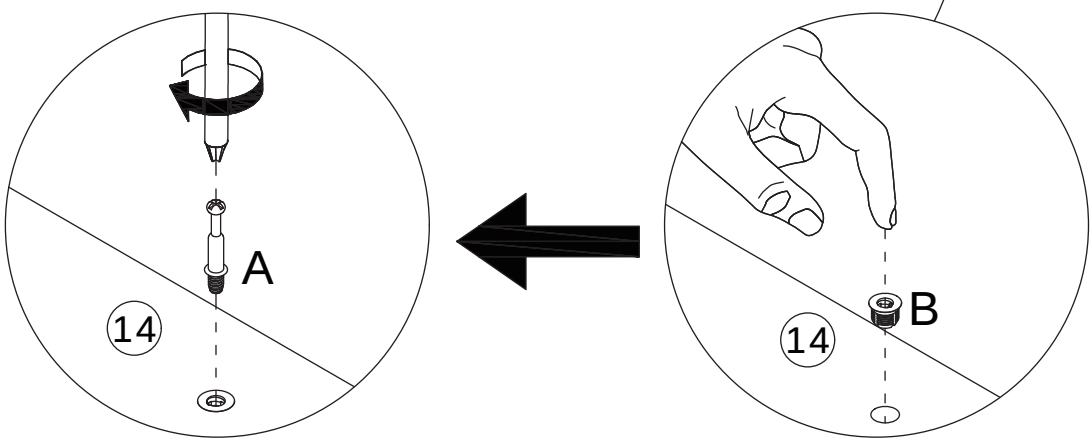

14

K x 2	L x 8	S x 5	
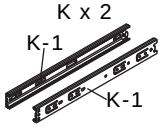 #3508 14''	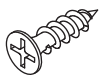 CRD3512A	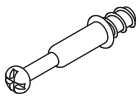 CRA0635A	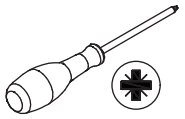

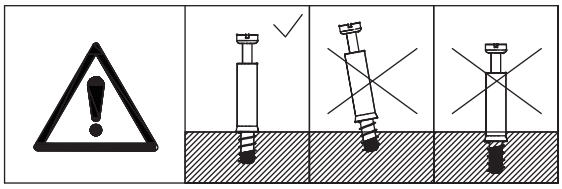

Secure slide rail (K-1) to panel 15 using screw (L).
Screw self-tapping rod (S) into panel 15.

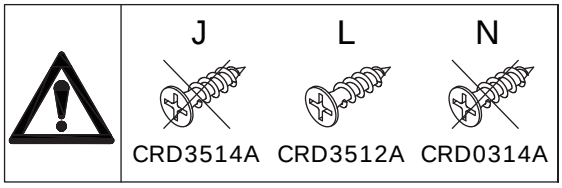

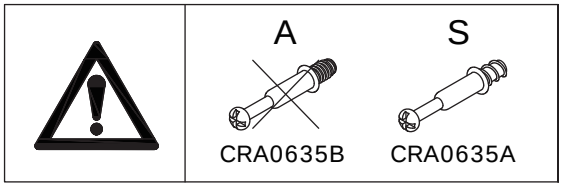

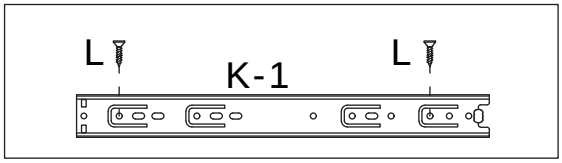

15

Q x 3	R x 2	
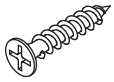 CRD3525A	 CRF0620A	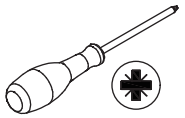

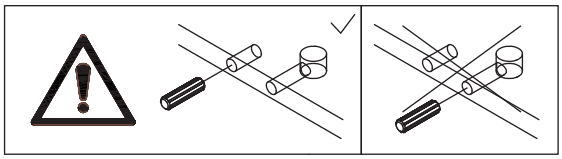

	D	R
	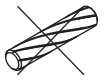 CRF0630A	 CRF0620A

Connect panel 37 to panel 14 using wooden dowel (R) and secure them with screw (Q).

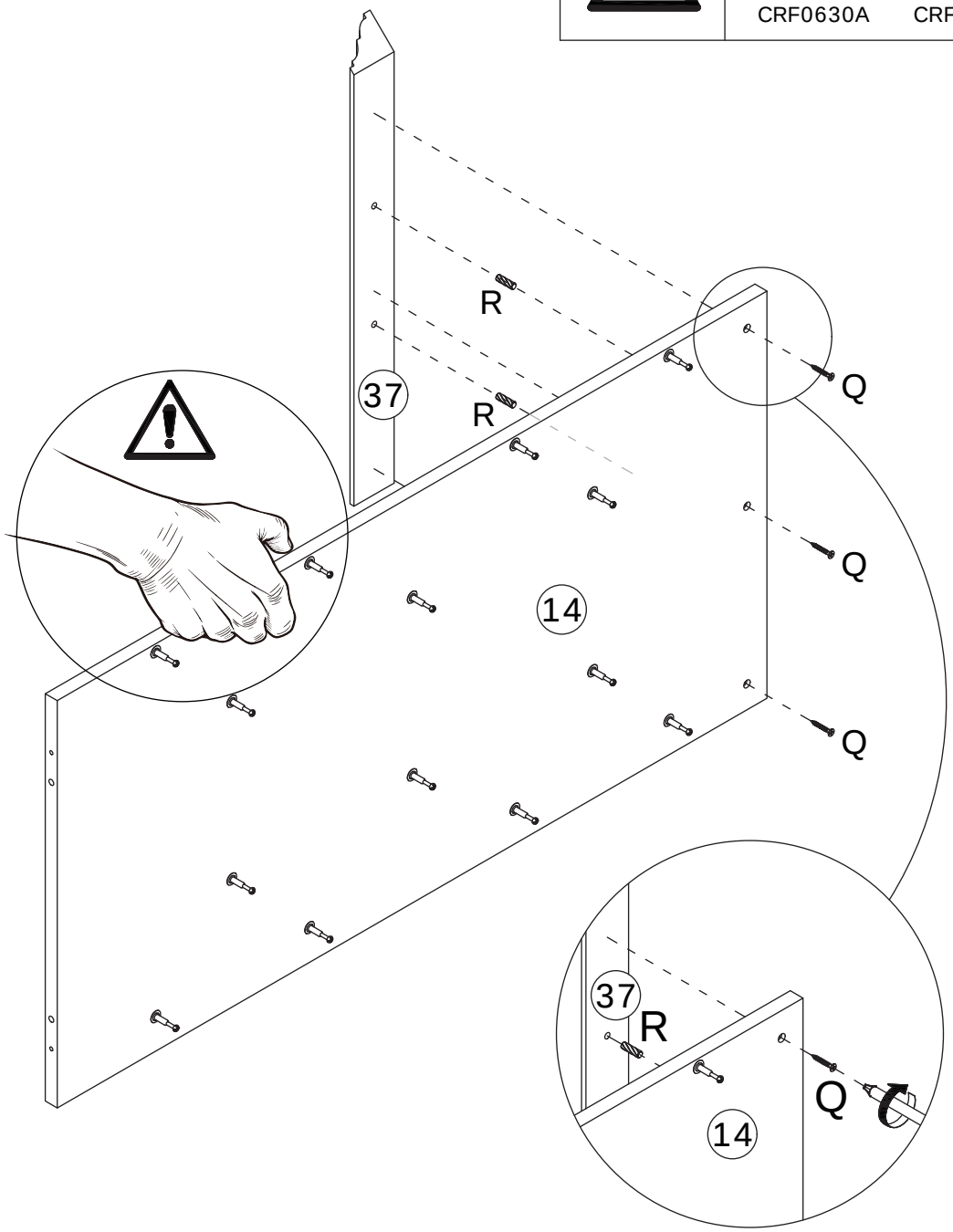

16

C x 6



CRB1595A

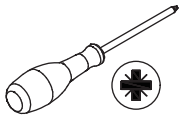

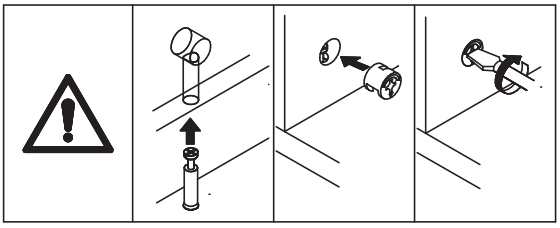

Connect panel 17 to panel 14, then tighten by turning cam lock (C) clockwise.

Be sure to check the orientation of panel 14 to prevent incorrect installation.

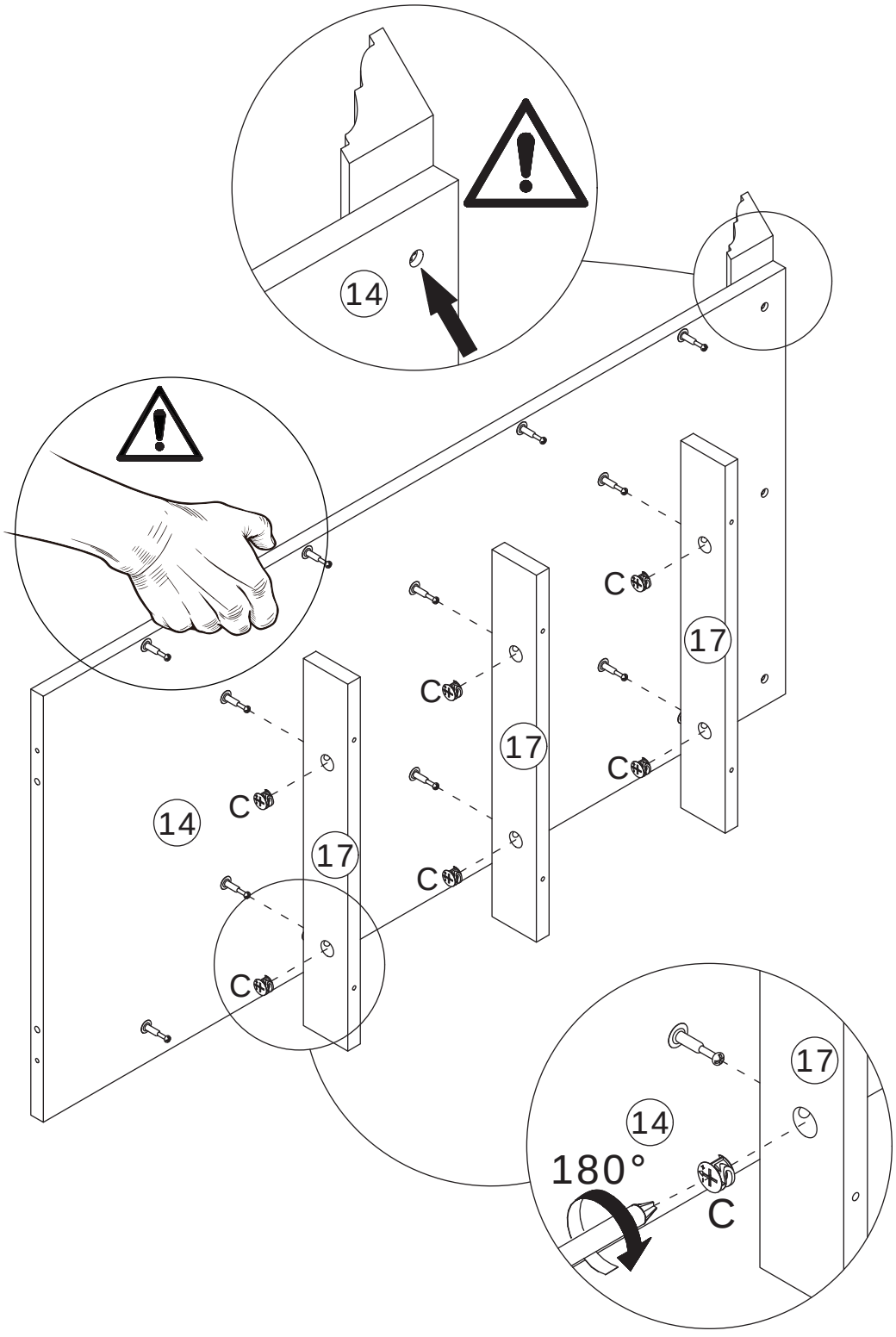

17

C x 8



CRB1595A

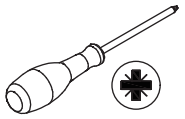

Connect panel 16 and 18 to panel 14, then tighten by turning cam lock (C) clockwise.

Be sure to check the orientation of panel 14 to prevent incorrect installation.

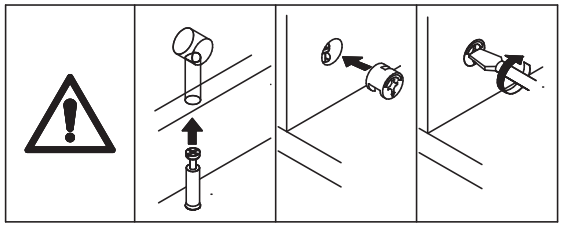

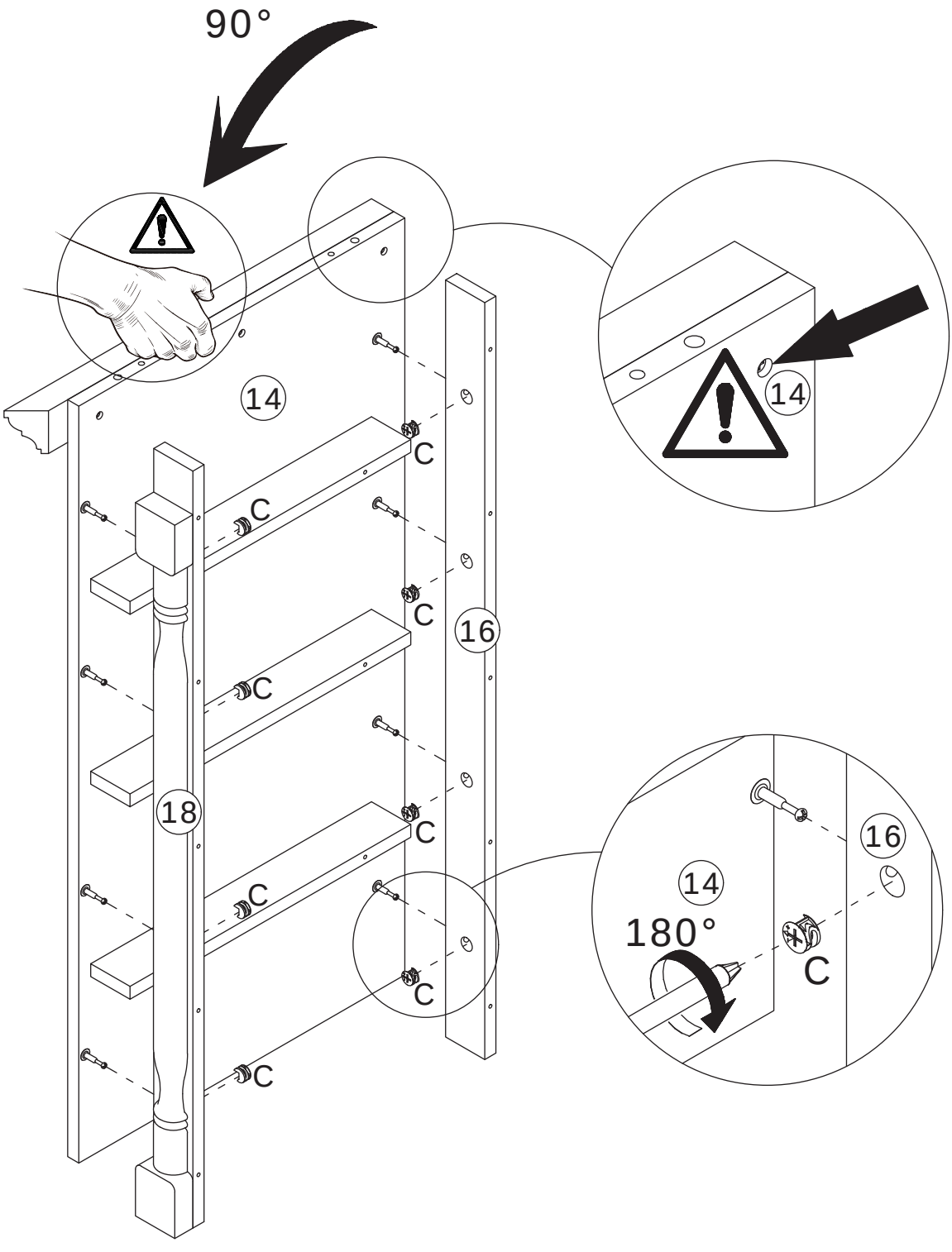

18

E x 16

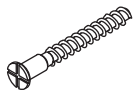

CRC0540A

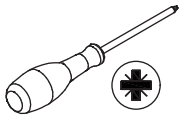

Connect panel 15 to panel 16, 17, and 18 using screw (E).

Be sure to pay attention to the orientation of panel 14 to prevent incorrect installation.

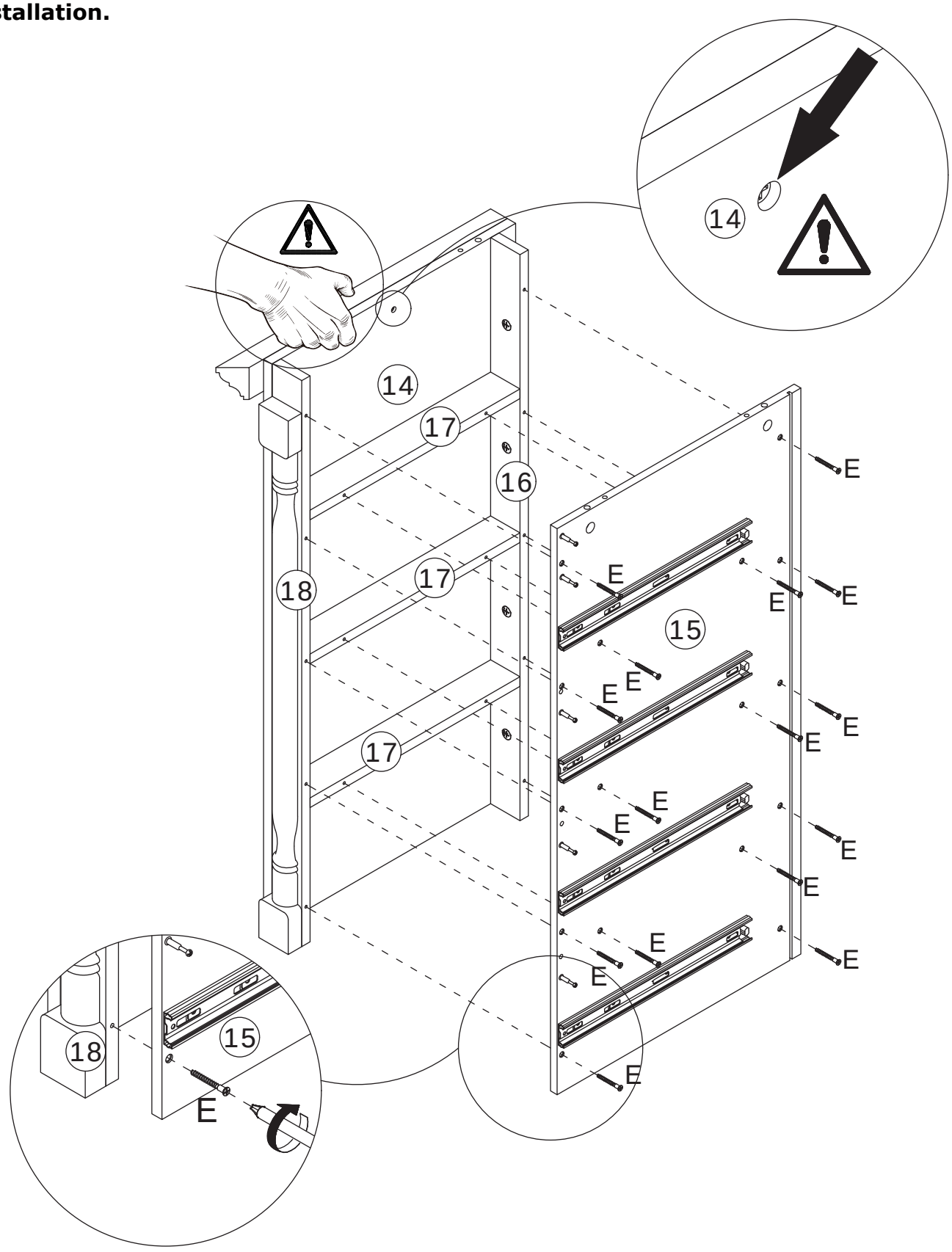

19

S x 3

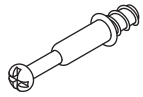

CRA0635A

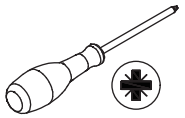

Screw self-tapping rod (S) into the panel 19.

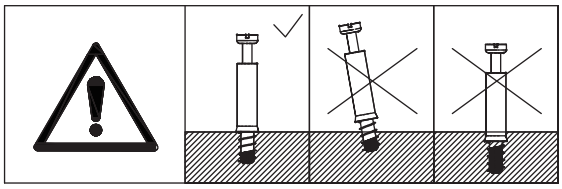

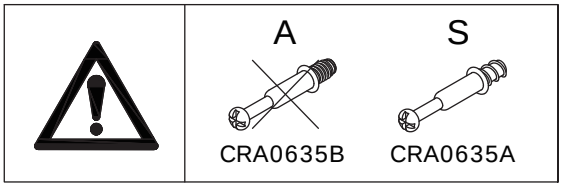

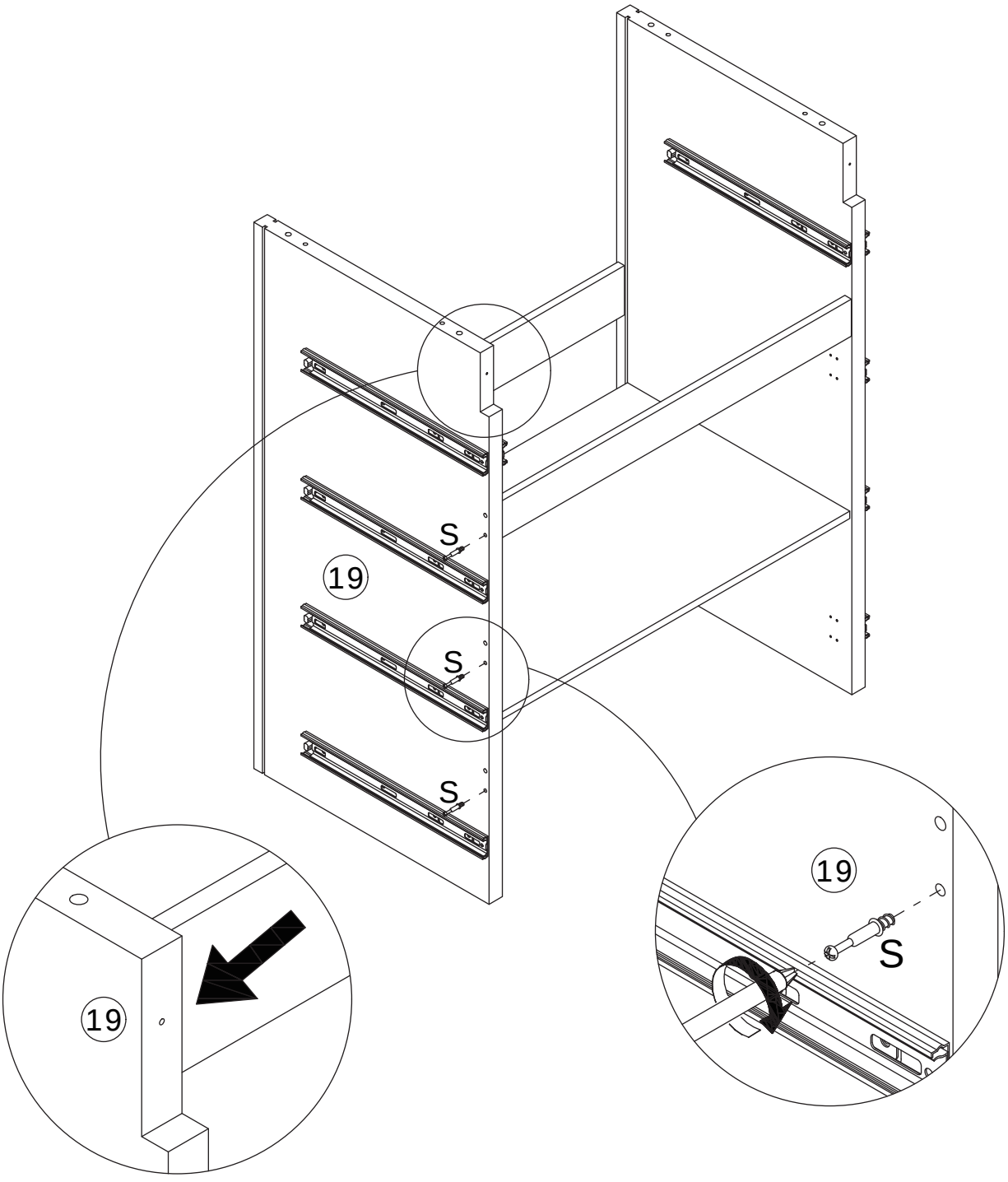

20

C x 3	D x 3	
 CRB1595A	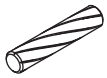 CRF0630A	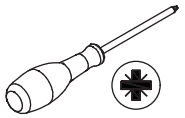

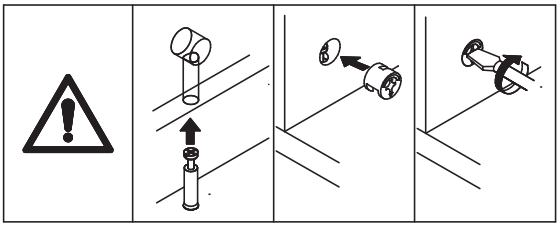

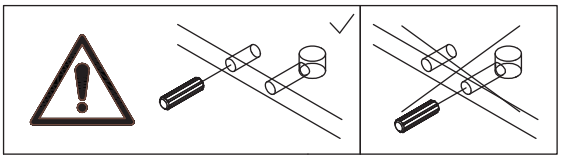

	D	R
	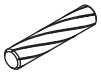 CRF0630A	 CRF0620A

Connect panel 30 to panel 19 using wooden dowel (D), then tighten by turning cam lock (C) clockwise.

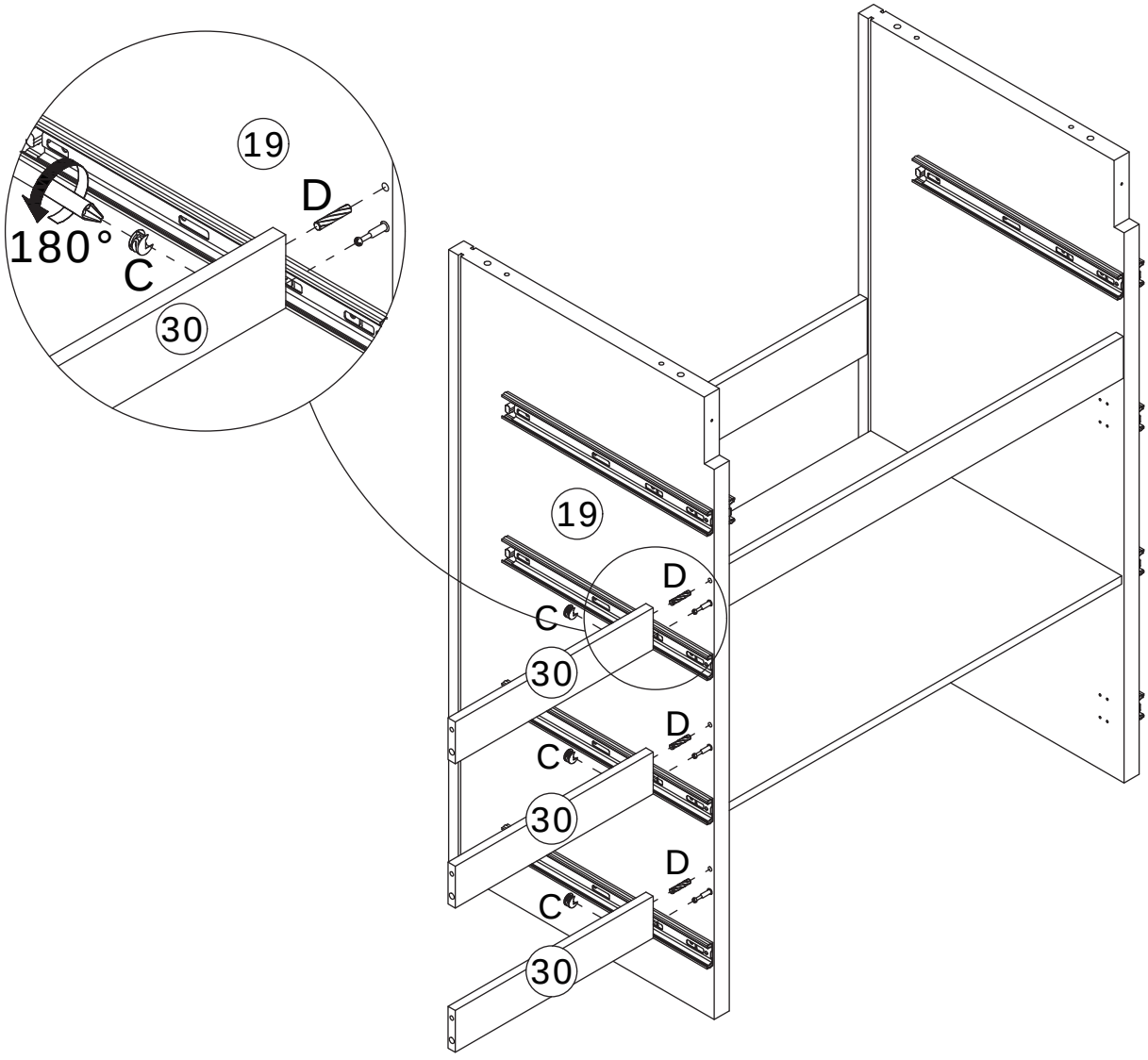

21

C x 3	D x 3	
 CRB1595A	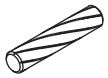 CRF0630A	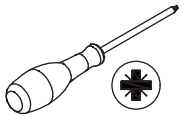

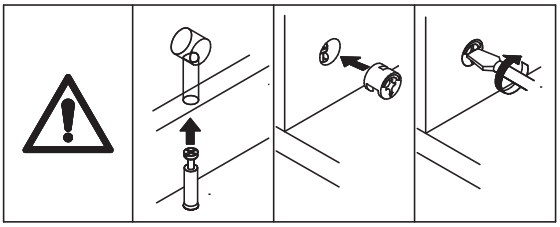

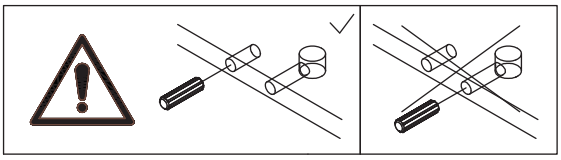

	D	R
	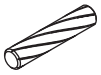 CRF0630A	 CRF0620A

Connect panel 15 to panel 30 using wooden dowel (D), then tighten by turning cam lock (C) clockwise.

22

C x 2



CRB1595A

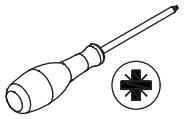

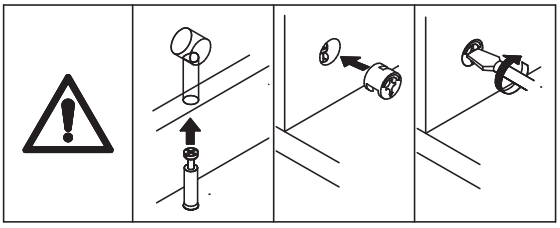

Connect panel 29 to panel 15, then tighten by turning cam lock (C) clockwise.

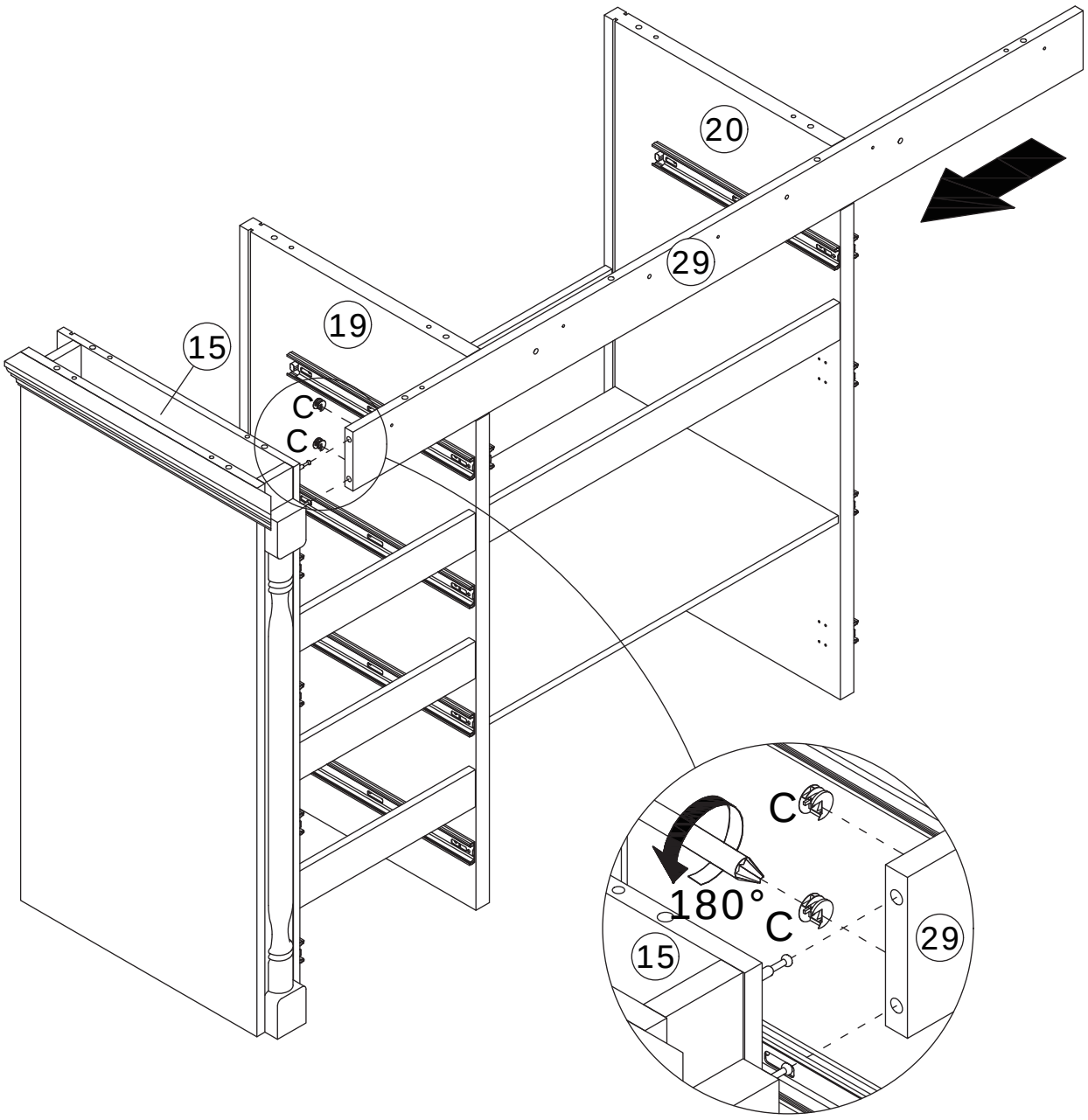

23

Q x 2

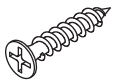

CRD3525A

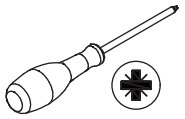

Secure panel 29 to panel 19 and 20 using screw (Q).

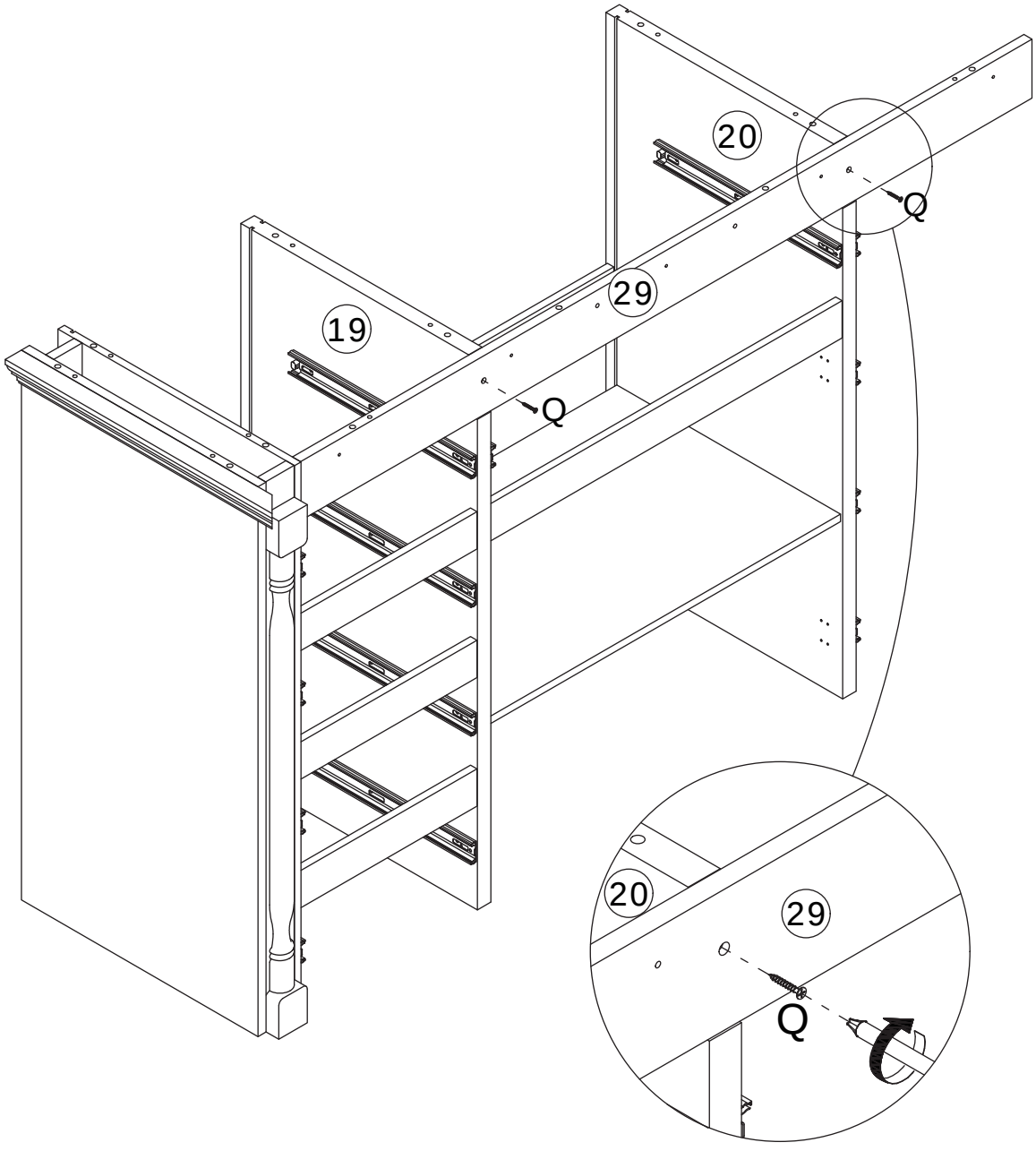

24

S x 3

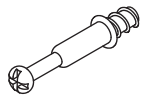

CRA0635A

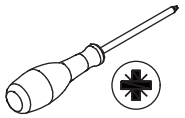

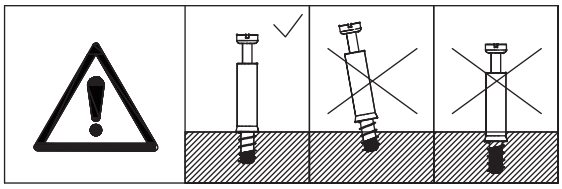

Screw self-tapping rod (S) into panel 20.

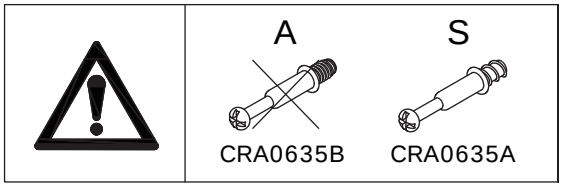

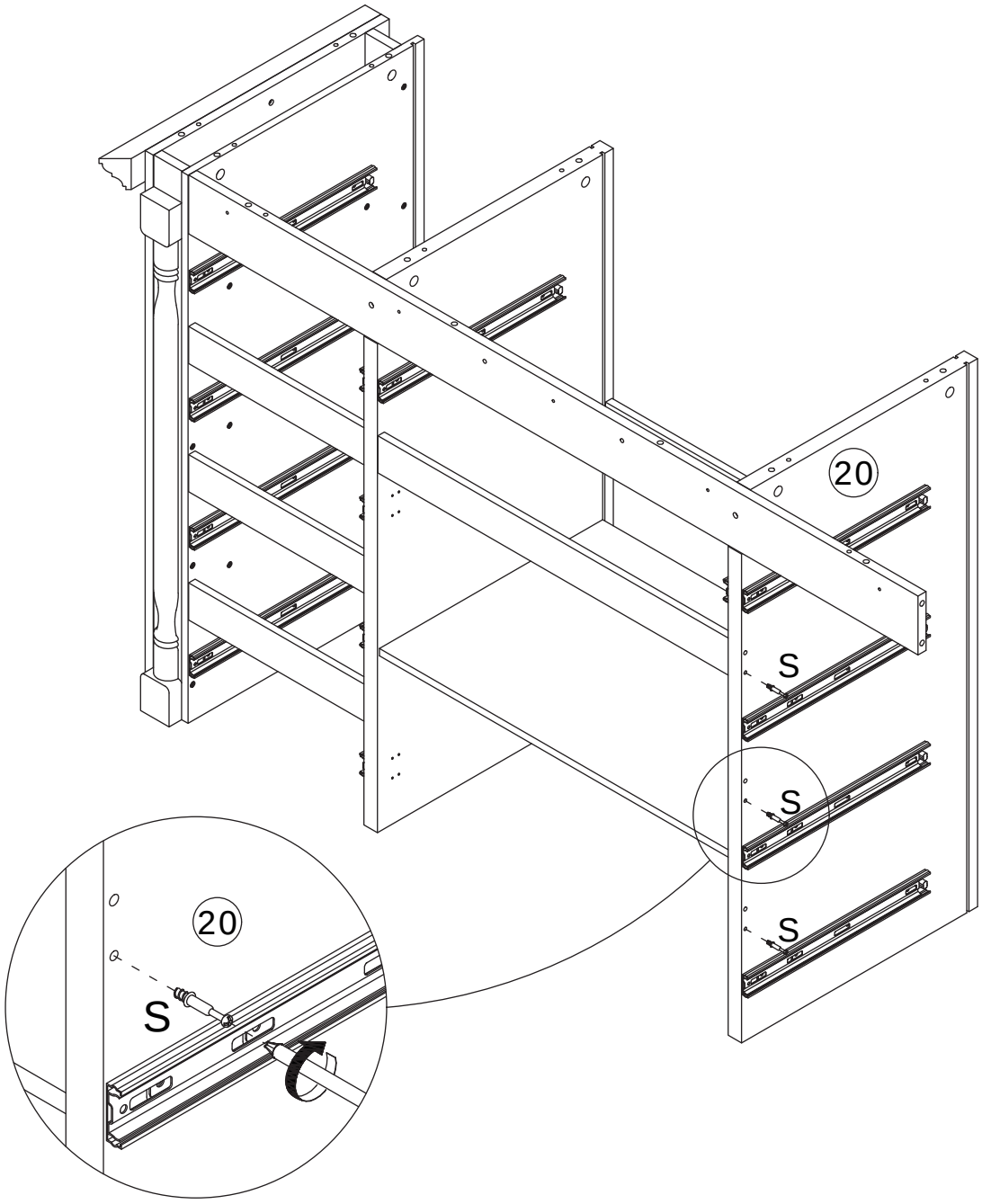

25

C x 3	D x 3	
 CRB1595A	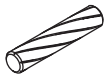 CRF0630A	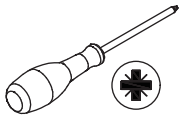

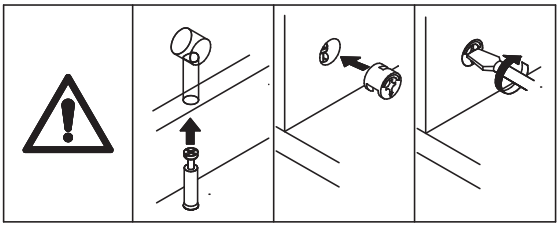

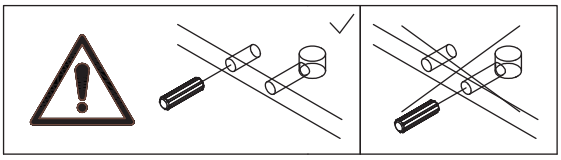

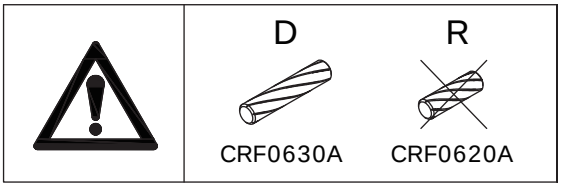

Connect panel 30 to panel 20 using wooden dowel (D), then tighten by turning cam lock (C) clockwise.

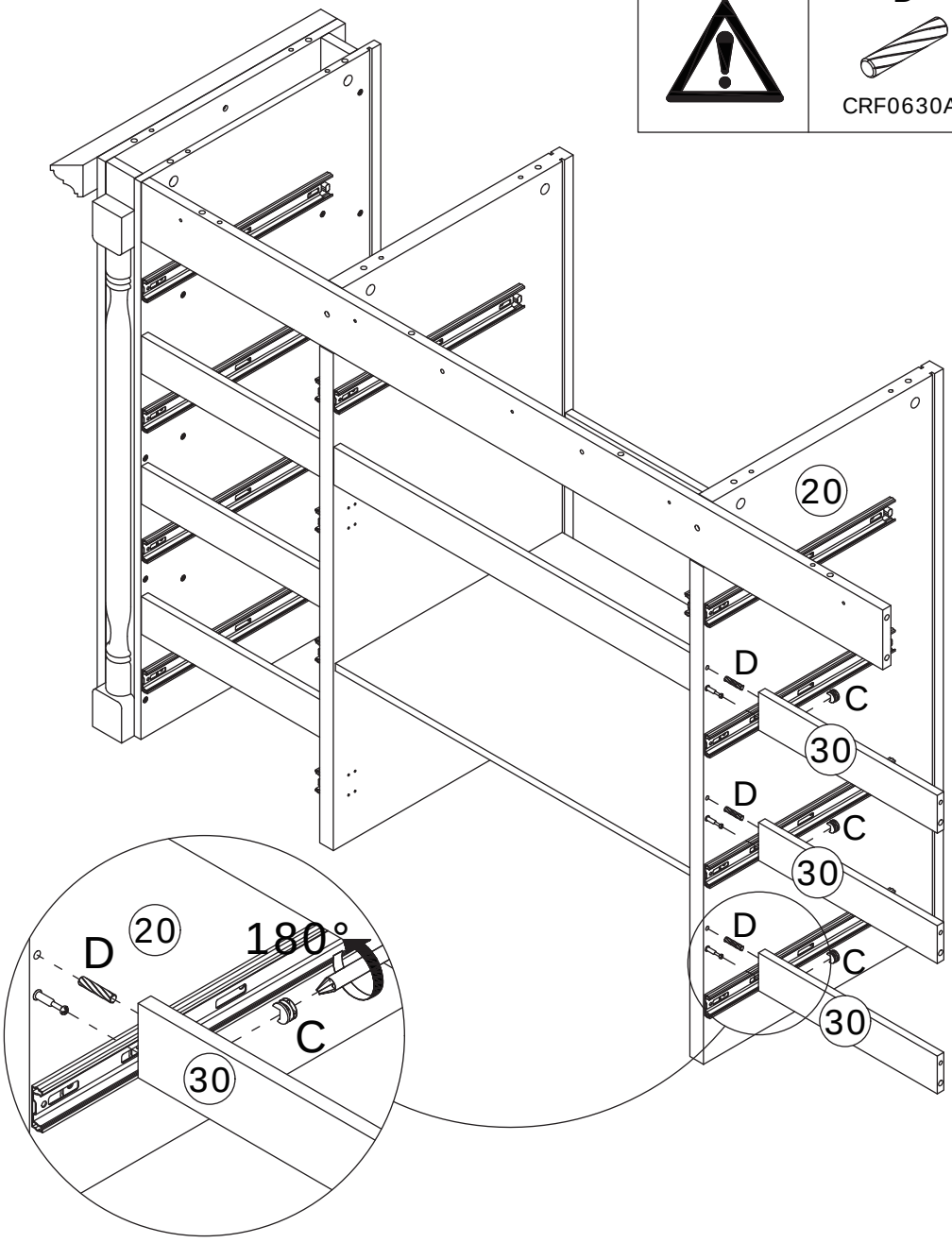

26

C x 5	D x 3	
 CRB1595A	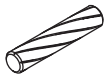 CRF0630A	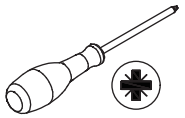

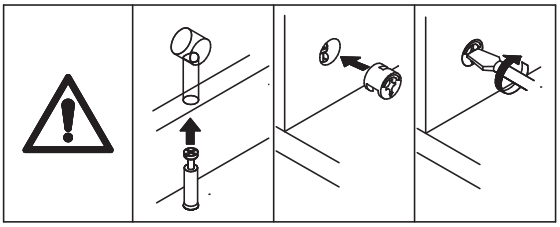

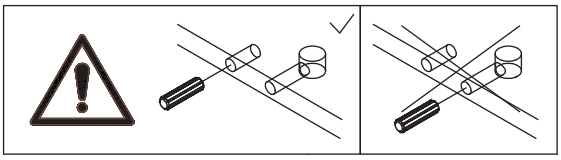

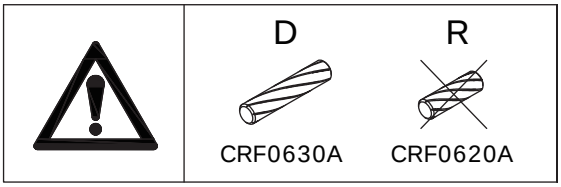

Connect panel 21 to panel 29 and 30 using wooden dowel (D), then tighten by turning cam lock (C) clockwise.

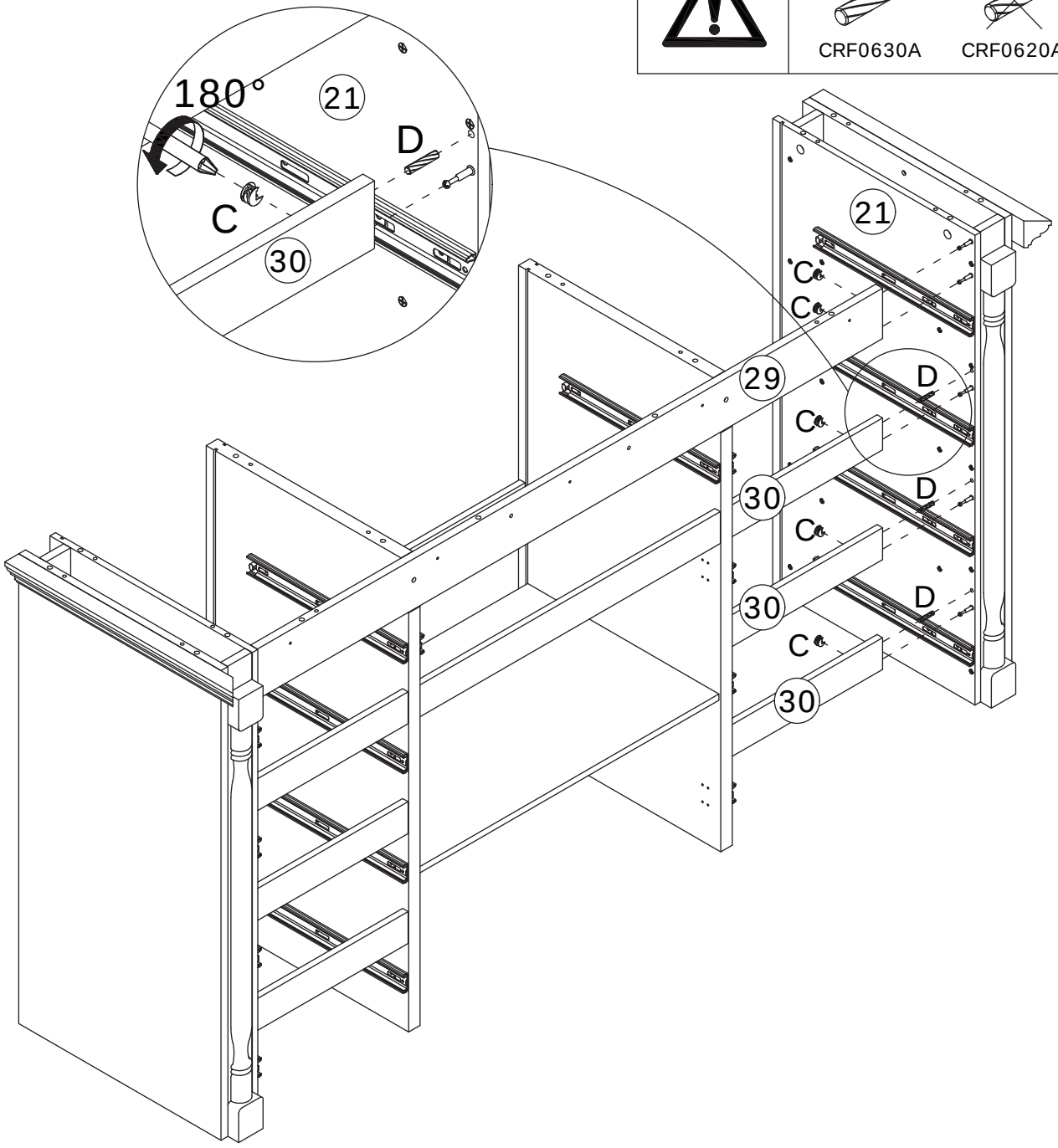

27

Q x 5	R x 2	
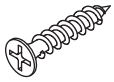		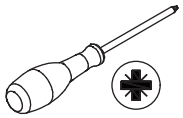
CRD3525A	CRF0620A	

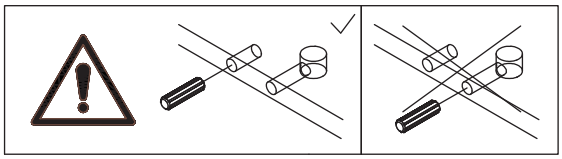

Connect panel 39 to panel 29 using wooden dowel (R) and secure them with screw (Q).

	D	R
	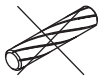	
	CRF0630A	CRF0620A

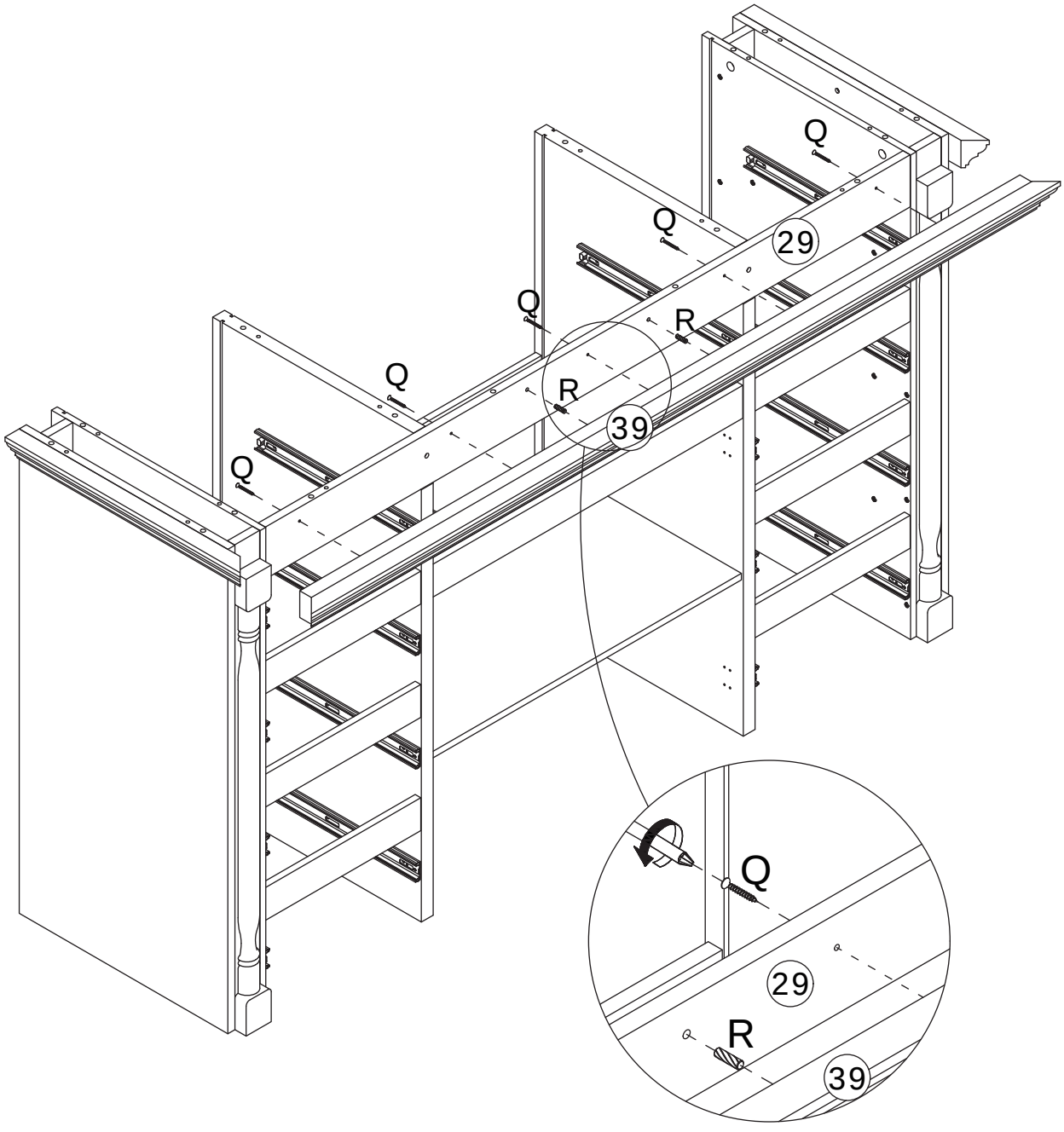

28

A x 12	B x 12	
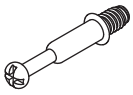 CRA0635B		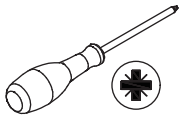

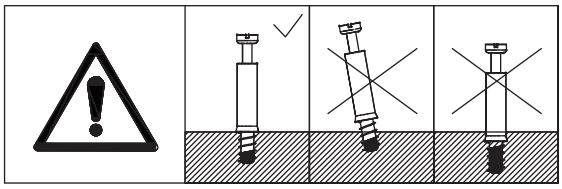

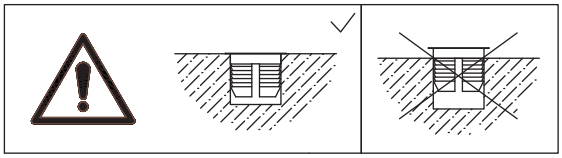

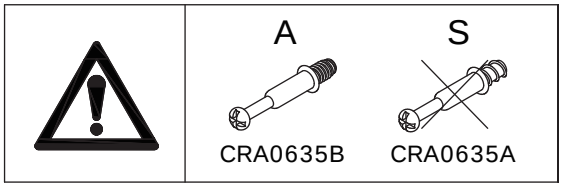

First, install plug (B) onto panel 1, then screw self-tapping rod (A) into panel 1.

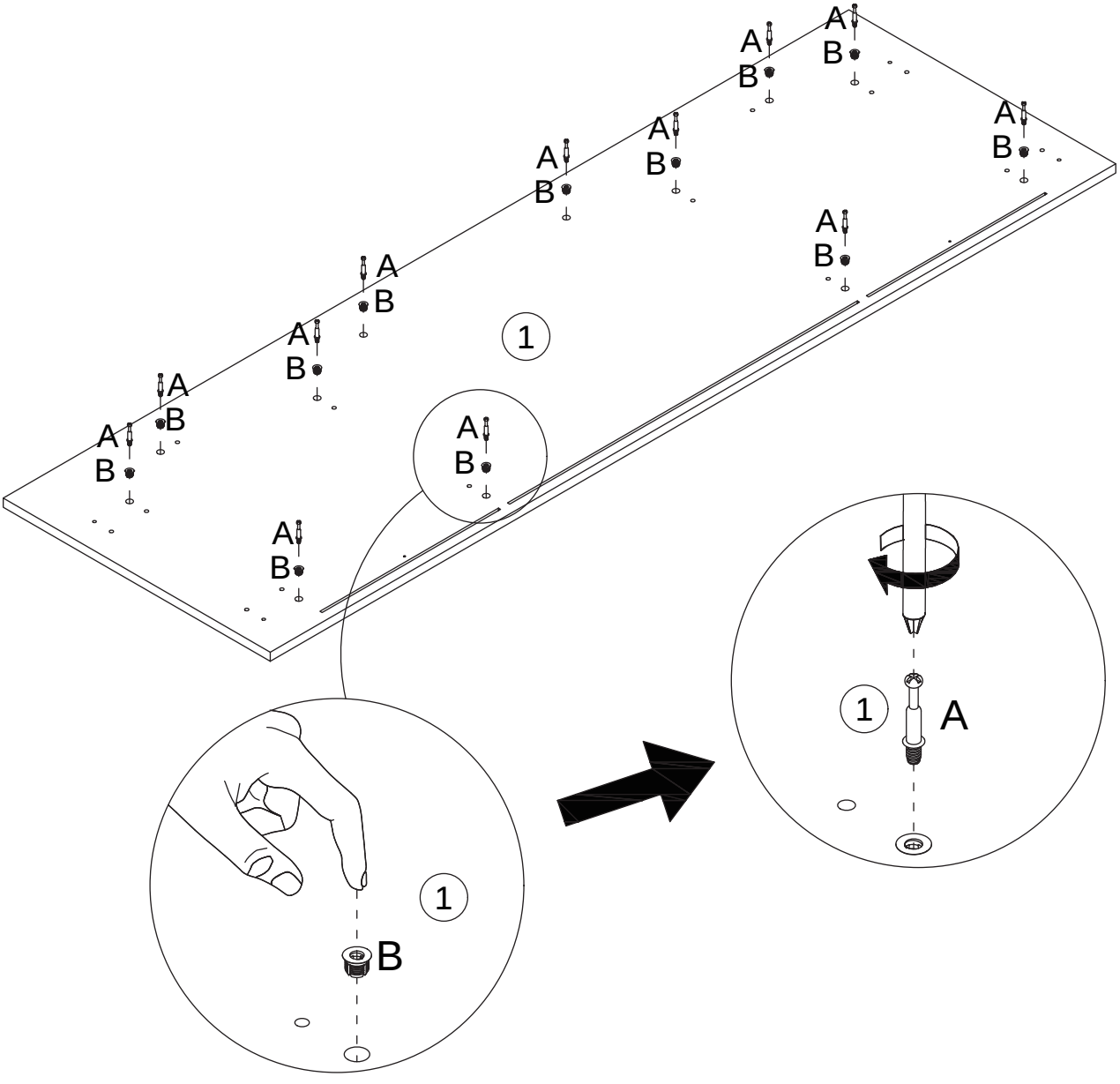

29

J x 2	P x 4	T x 2	
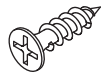 CRD3514A			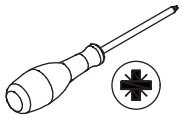

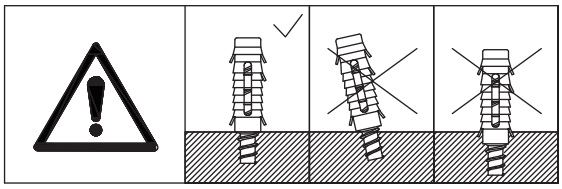

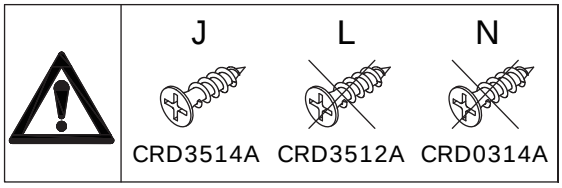

Secure bracket (T) to panel 1 using screw (J).
Install screw (P) to panel 1.

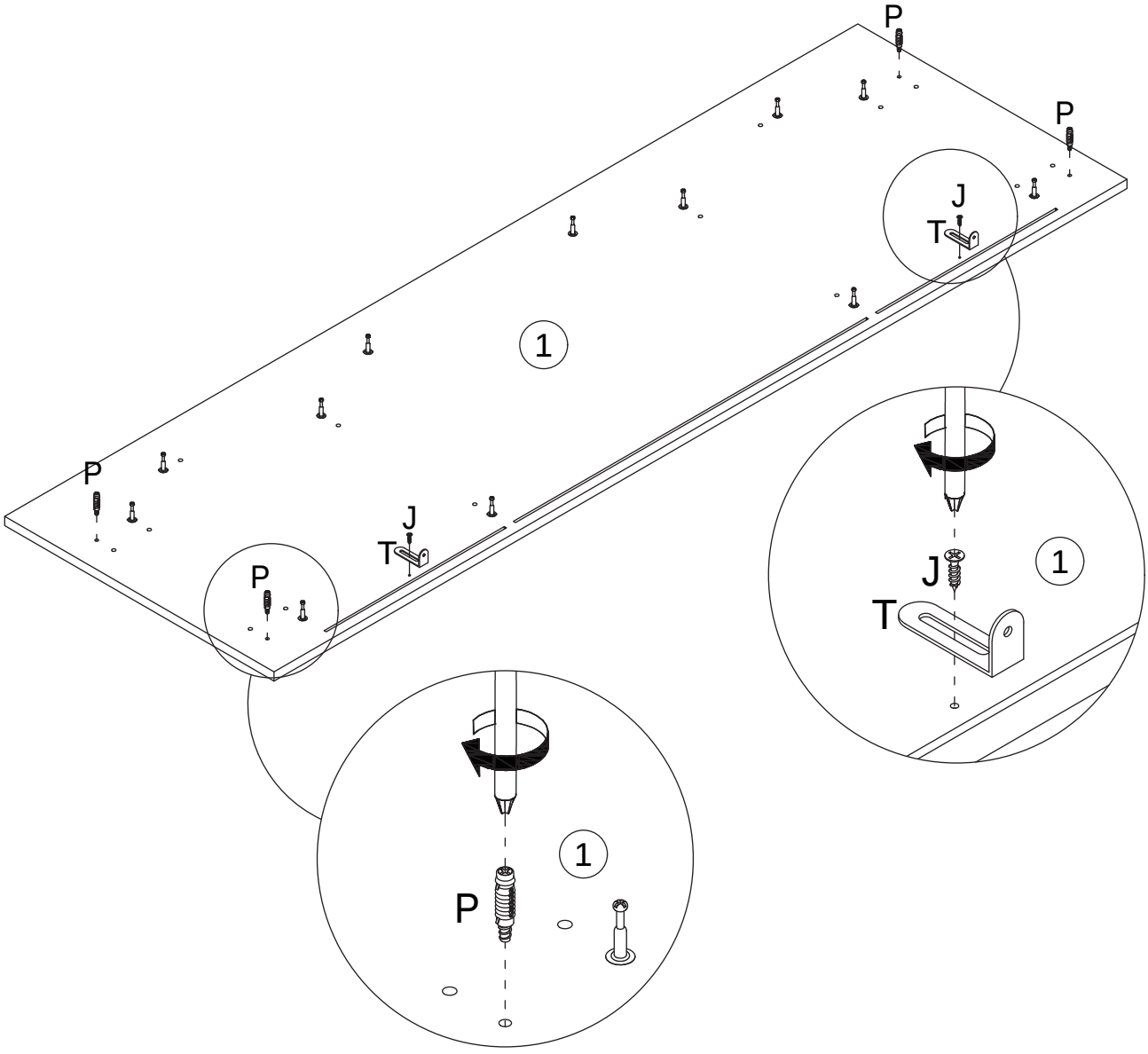

30

D x 14

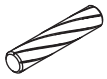

CRF0630A

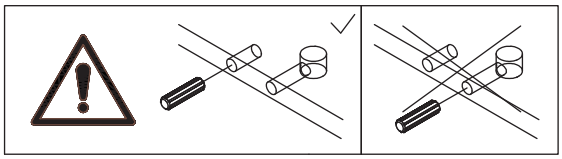

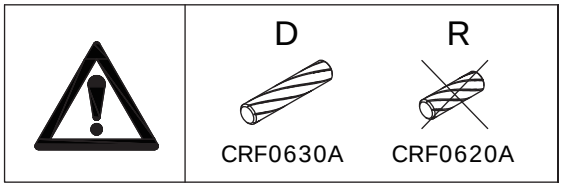

Insert wooden dowel (D) into the mounting unit.

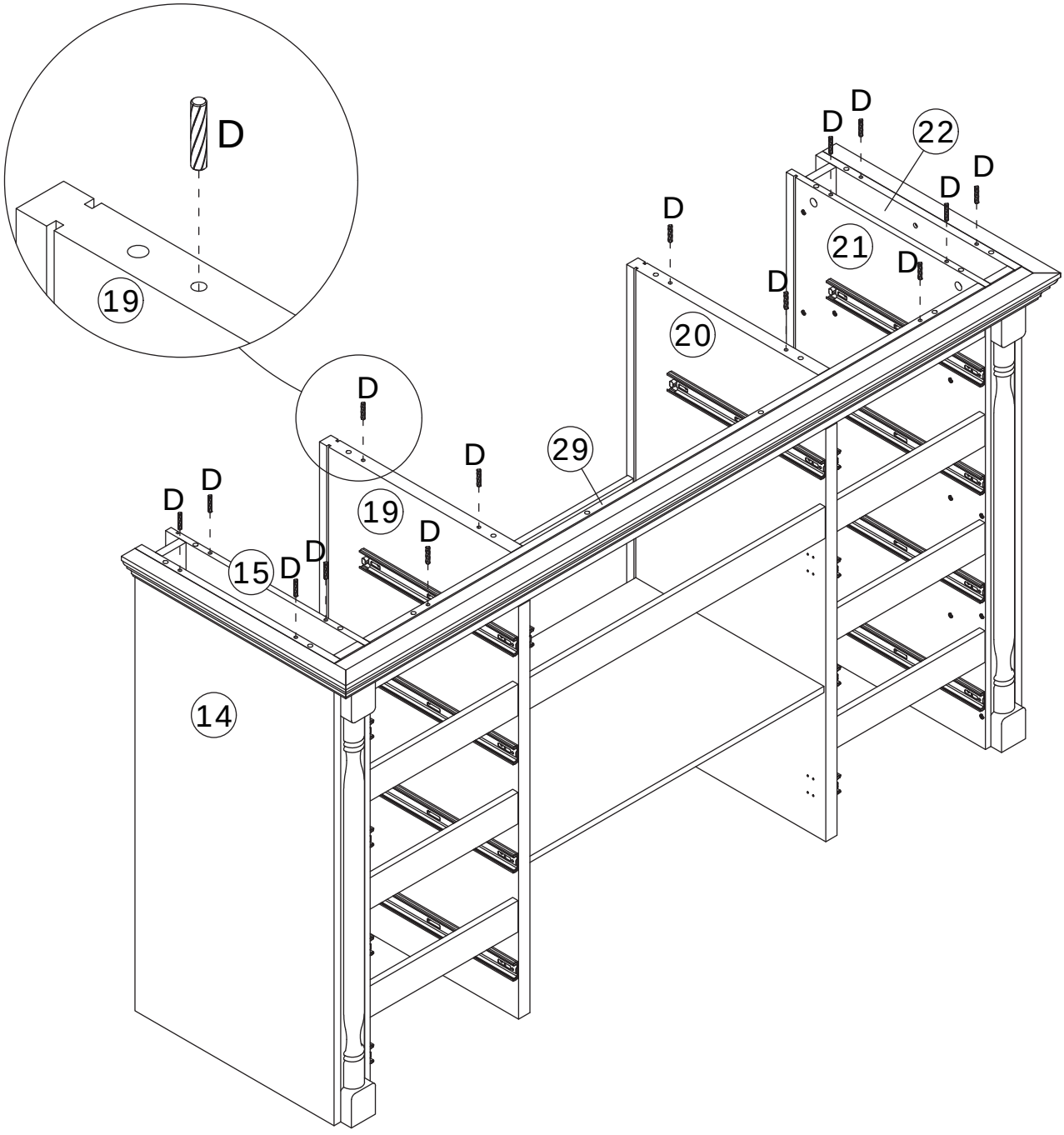

31

C x 12



CRB1595A

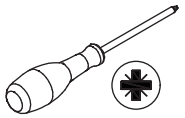

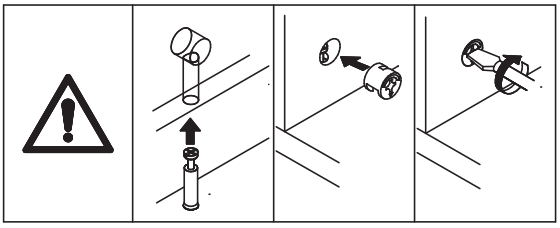

Connect panel 1 to the mounting unit, then tighten by turning cam lock (C) clockwise.

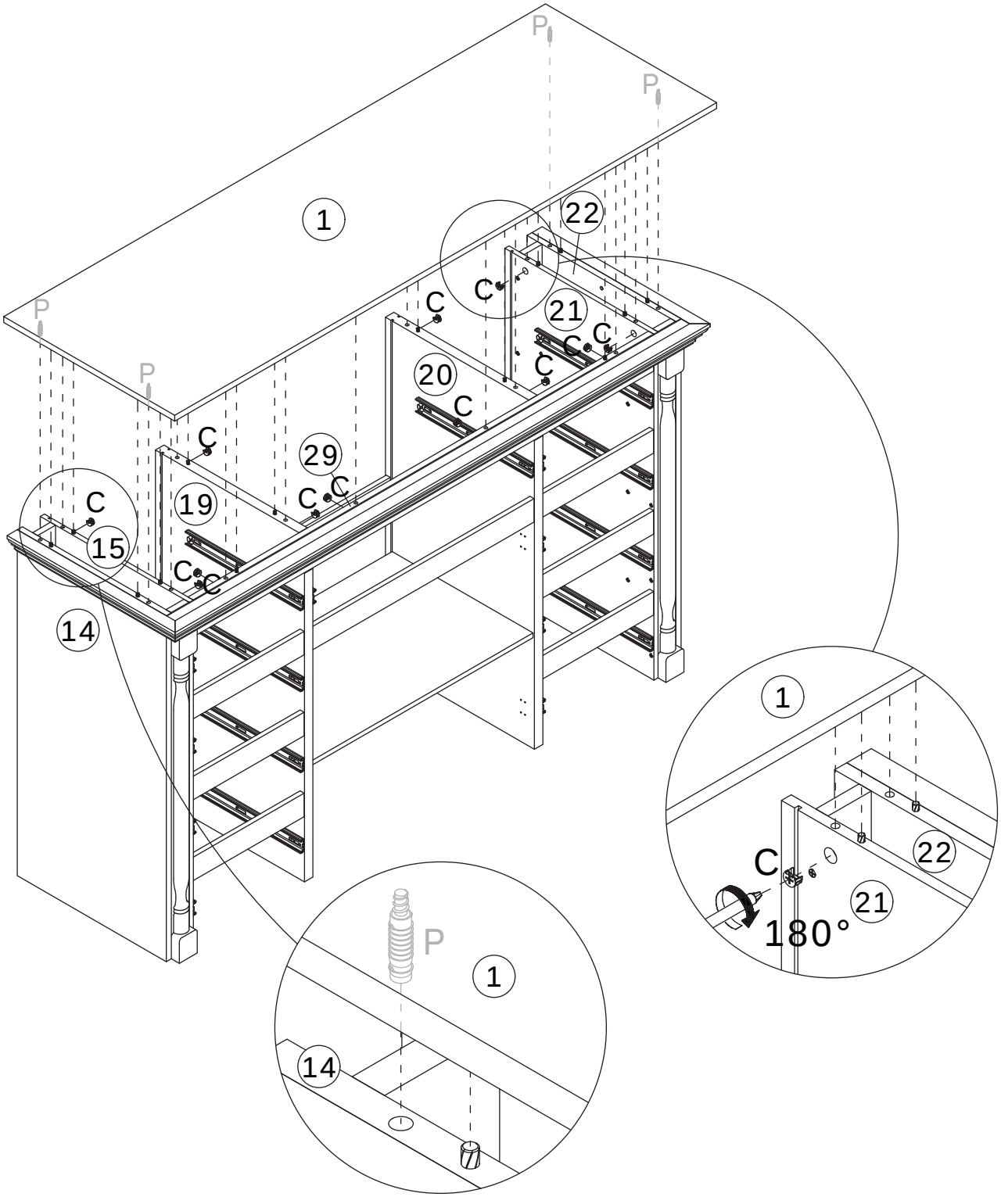

32

Turn the cabinet upside down and insert panel 26 and 27 along the slots provided.

Pay attention to the orientation of panel 26.

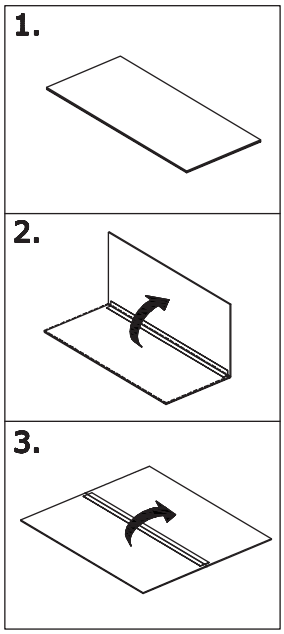

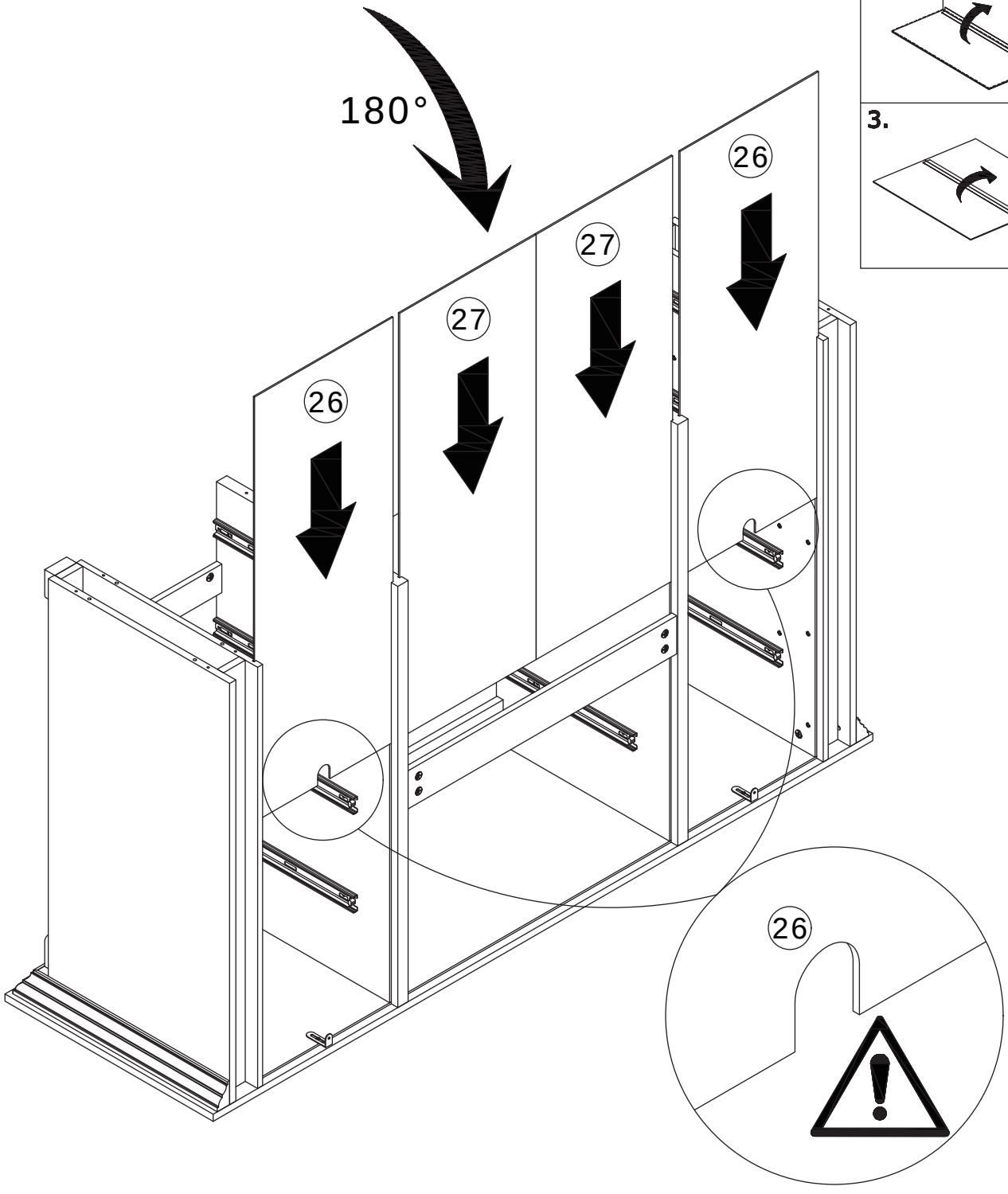

33

S x 12

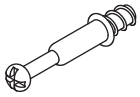

CRA0635A

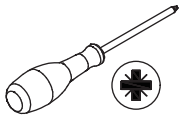

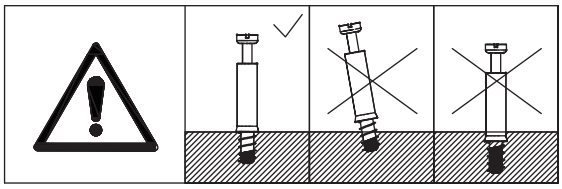

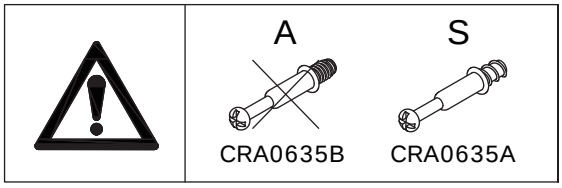

Screw self-tapping rod (S) into panel 32.

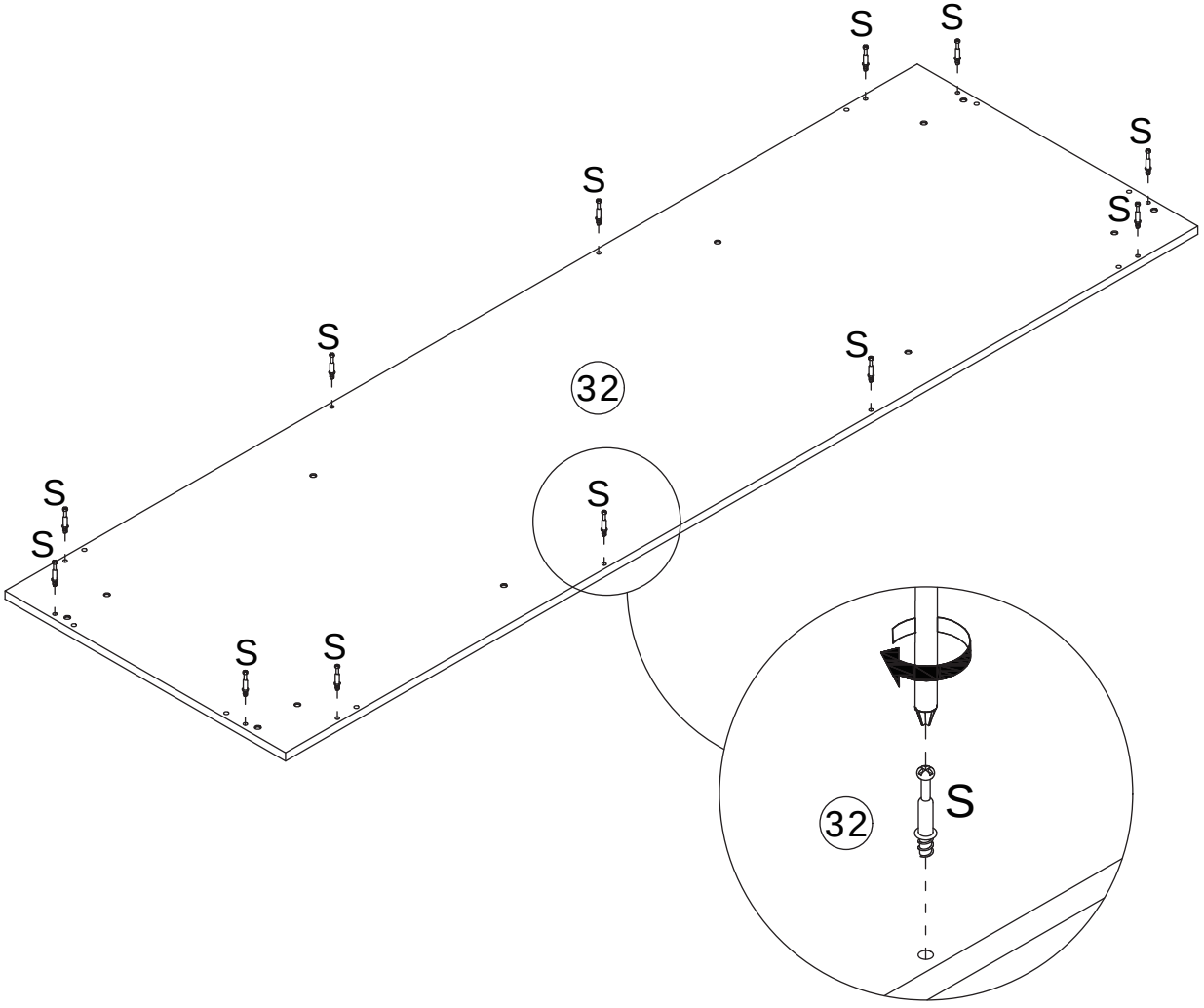

34

D x 12

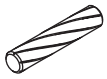

CRF0630A

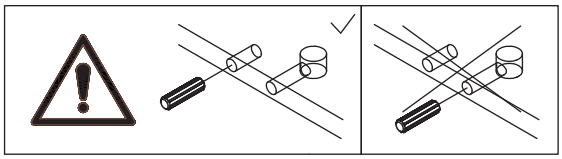

Insert wooden dowel (D) into the mounting unit.

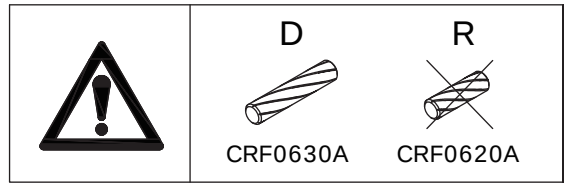

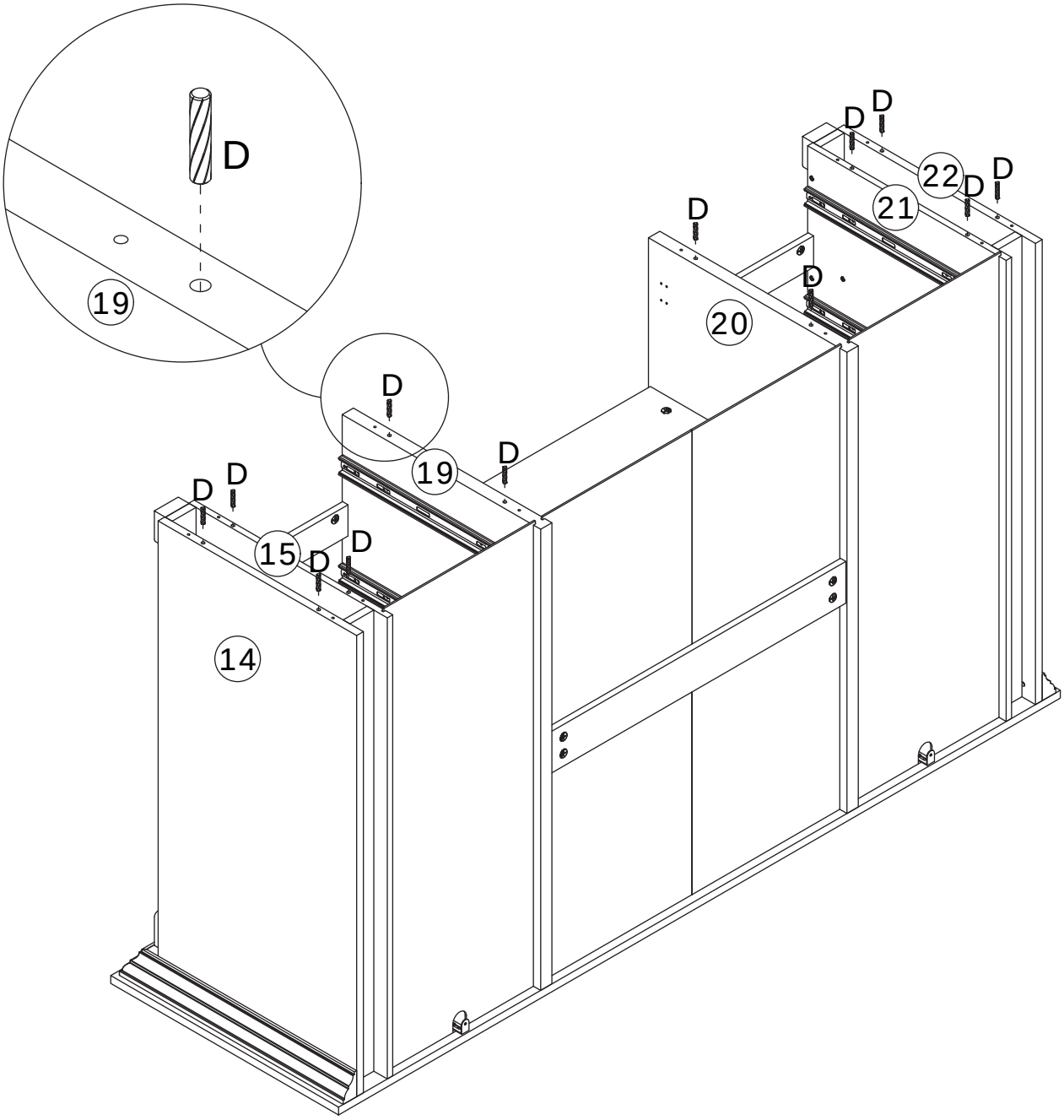

35

E x 12

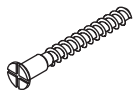

CRC0540A

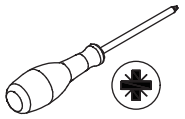

Secure panel 32 to the mounting unit using screw (E).

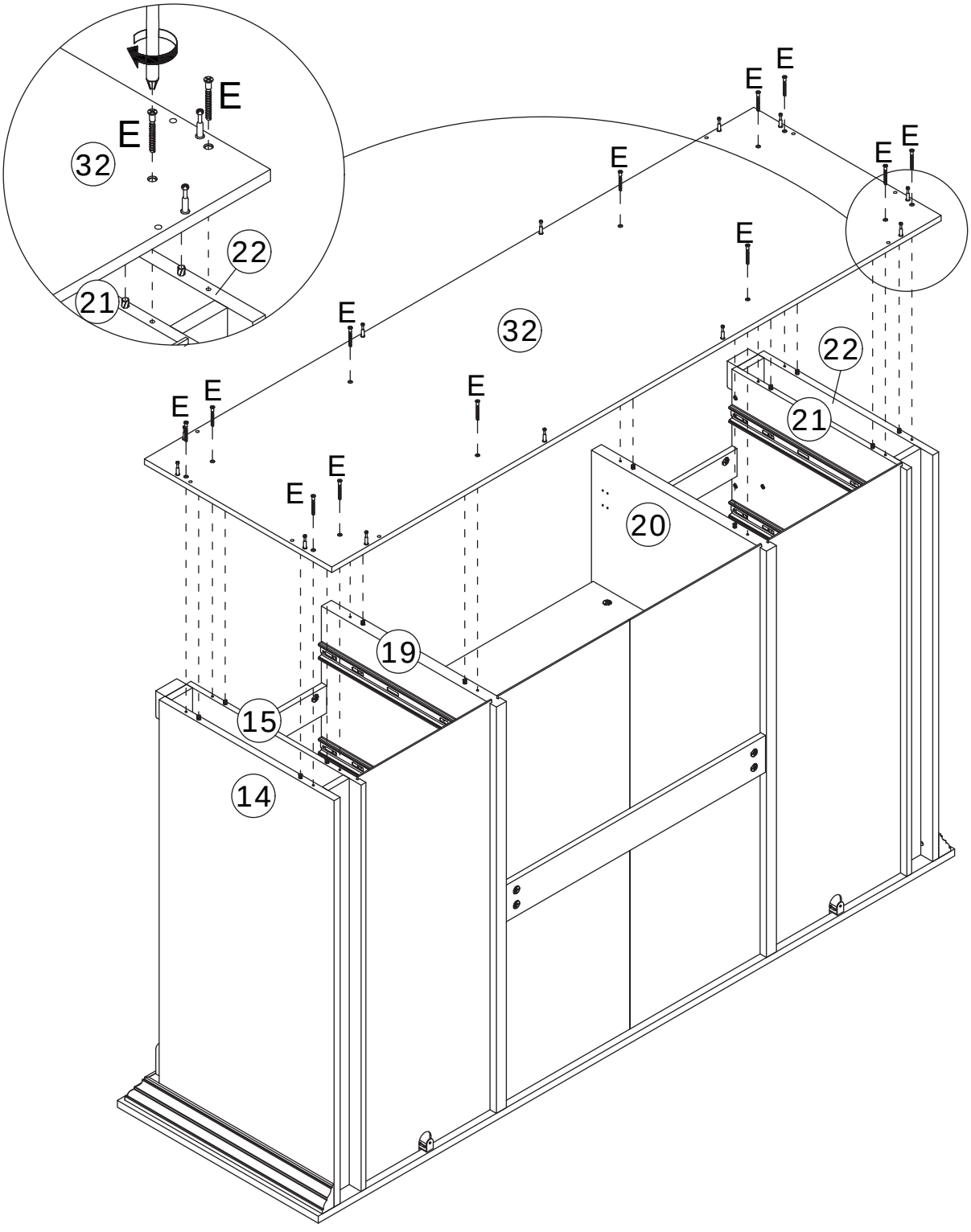

36

A x 12	B x 12	S x 8	
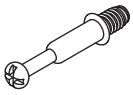 CRA0635B		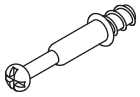 CRA0635A	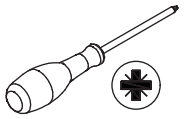

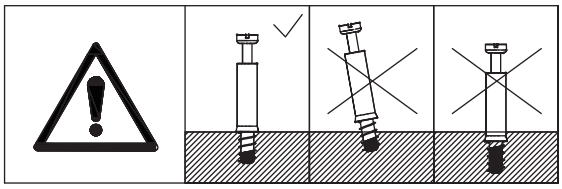

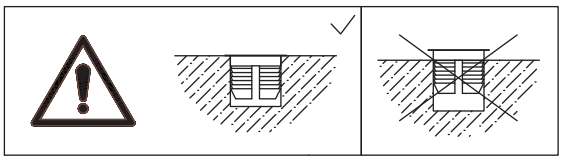

First, install plug (B) onto panel 33 and 34, then screw self-tapping screw (A) into panel 33 and 34.

Screw self-tapping screw (S) into panel 33 and 34.

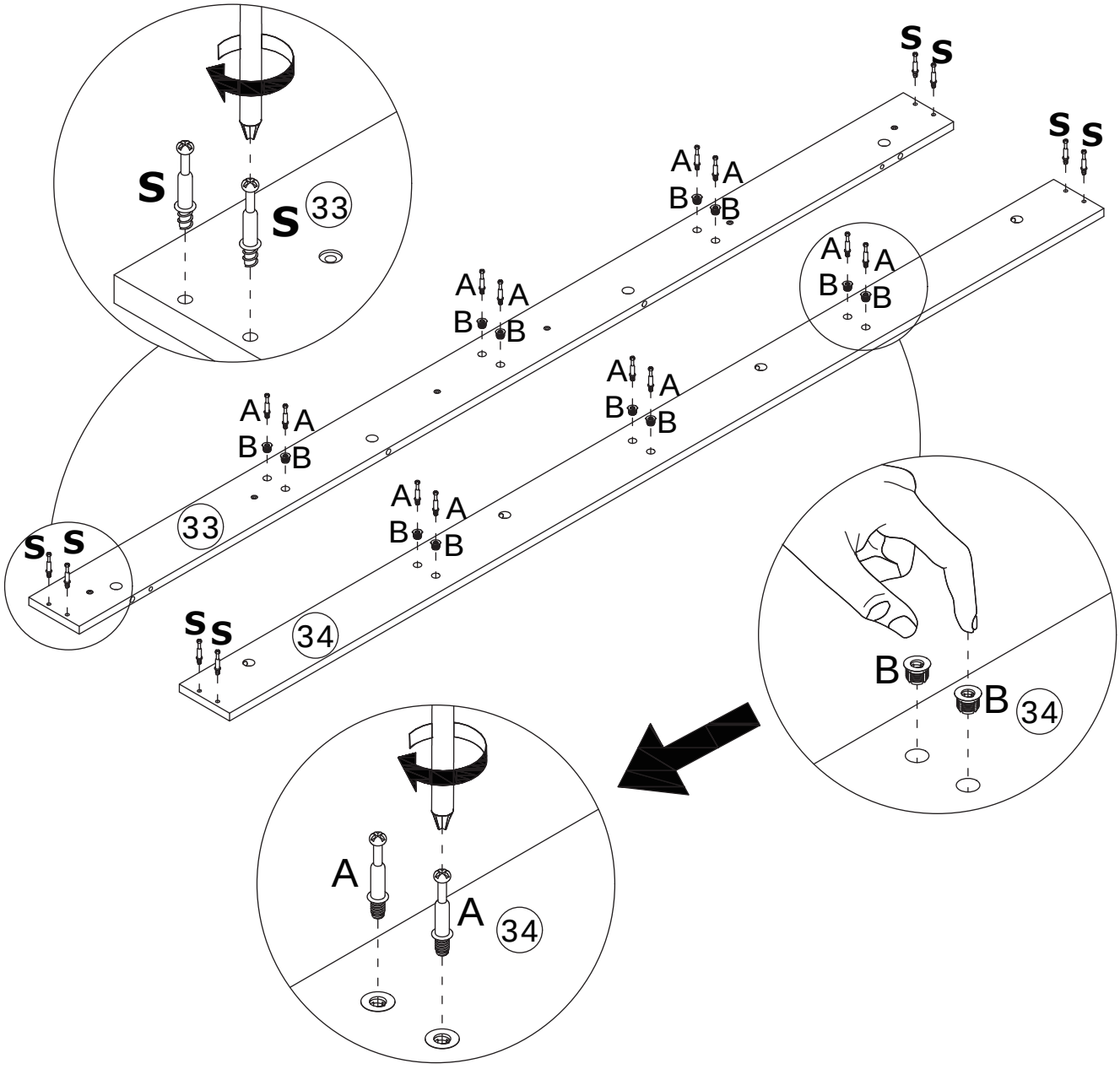

37

C x 20



CRB1595A

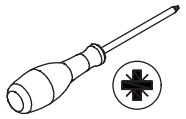

Connect panel 33 and 34 to panel 35, 36, and 43, then tighten by turning cam lock (C) clockwise.

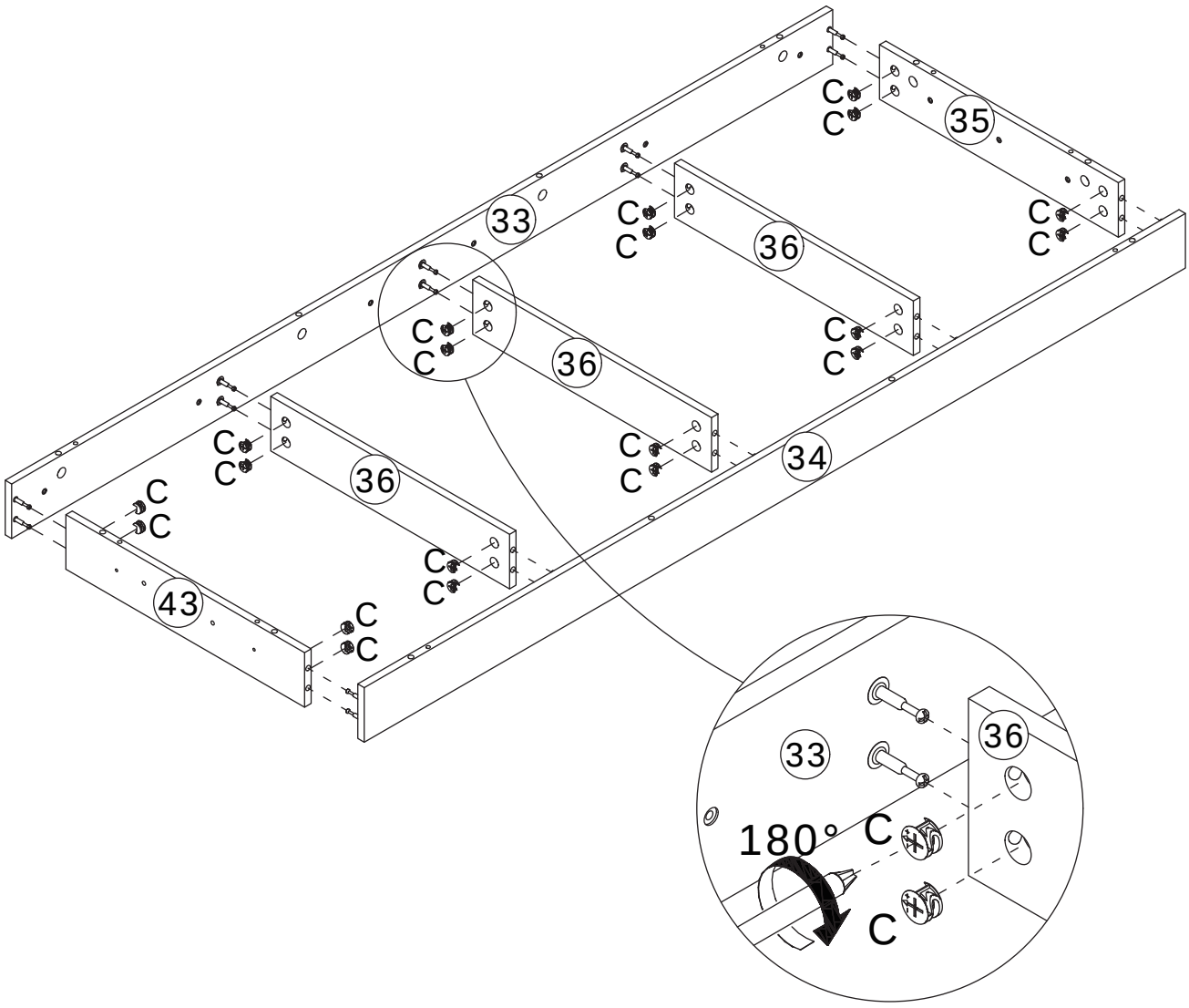

38

D x 8

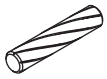

CRF0630A

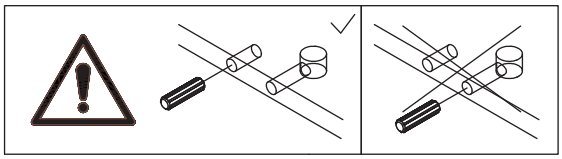

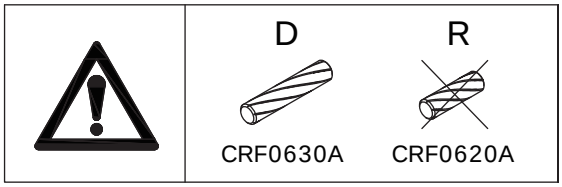

Insert wooden dowel (D) into panel 33, 34, 35, and 43.

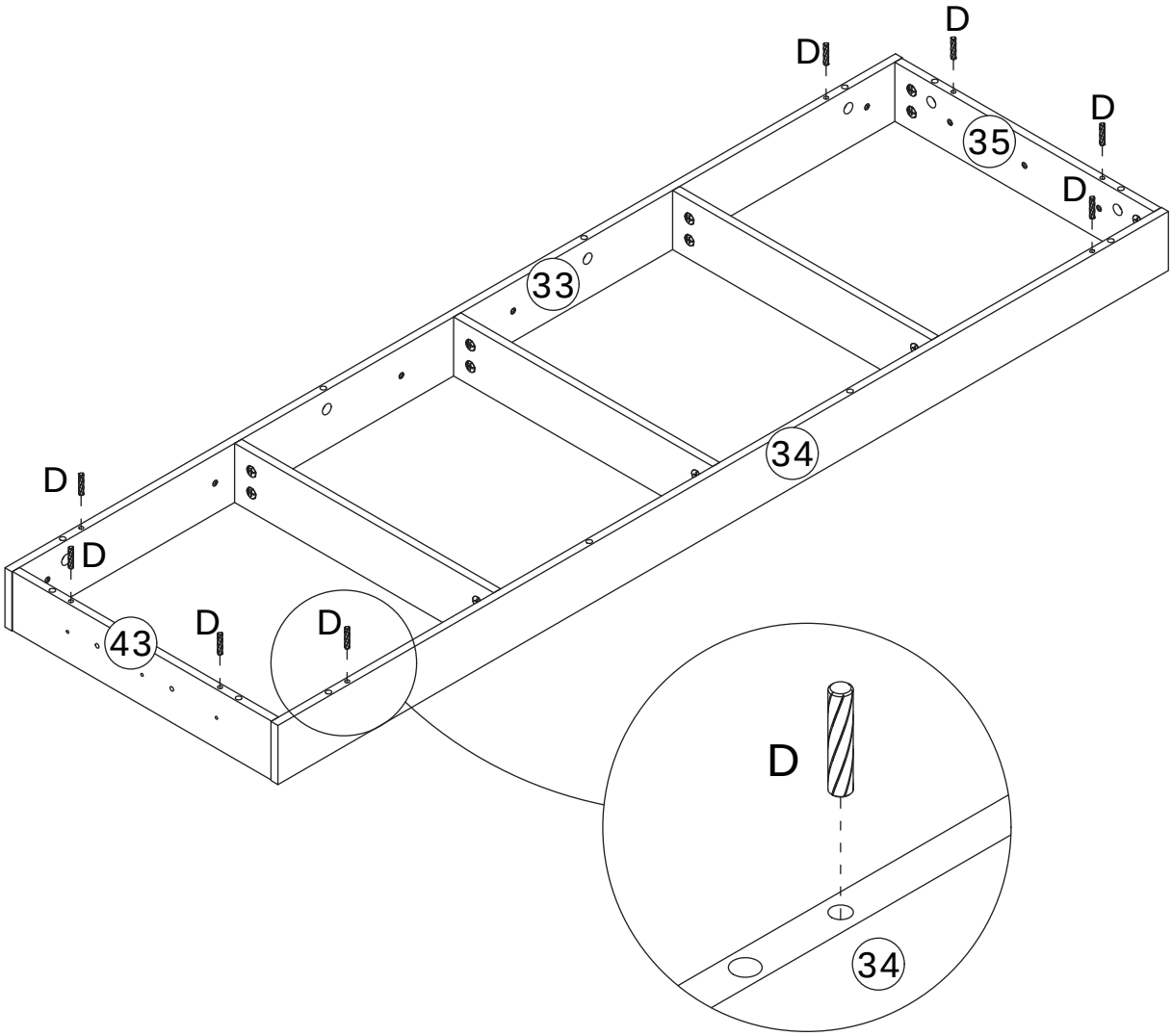

39

C x 12



CRB1595A

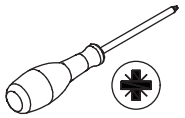

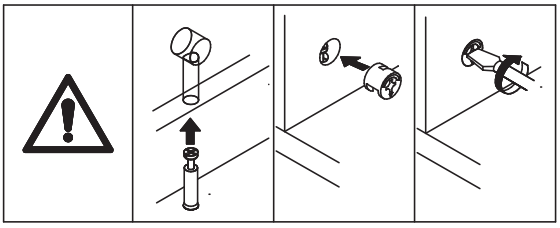

Connect panel 33, 34, 35, and 43 to panel 32, then tighten by turning cam lock (C) clockwise.

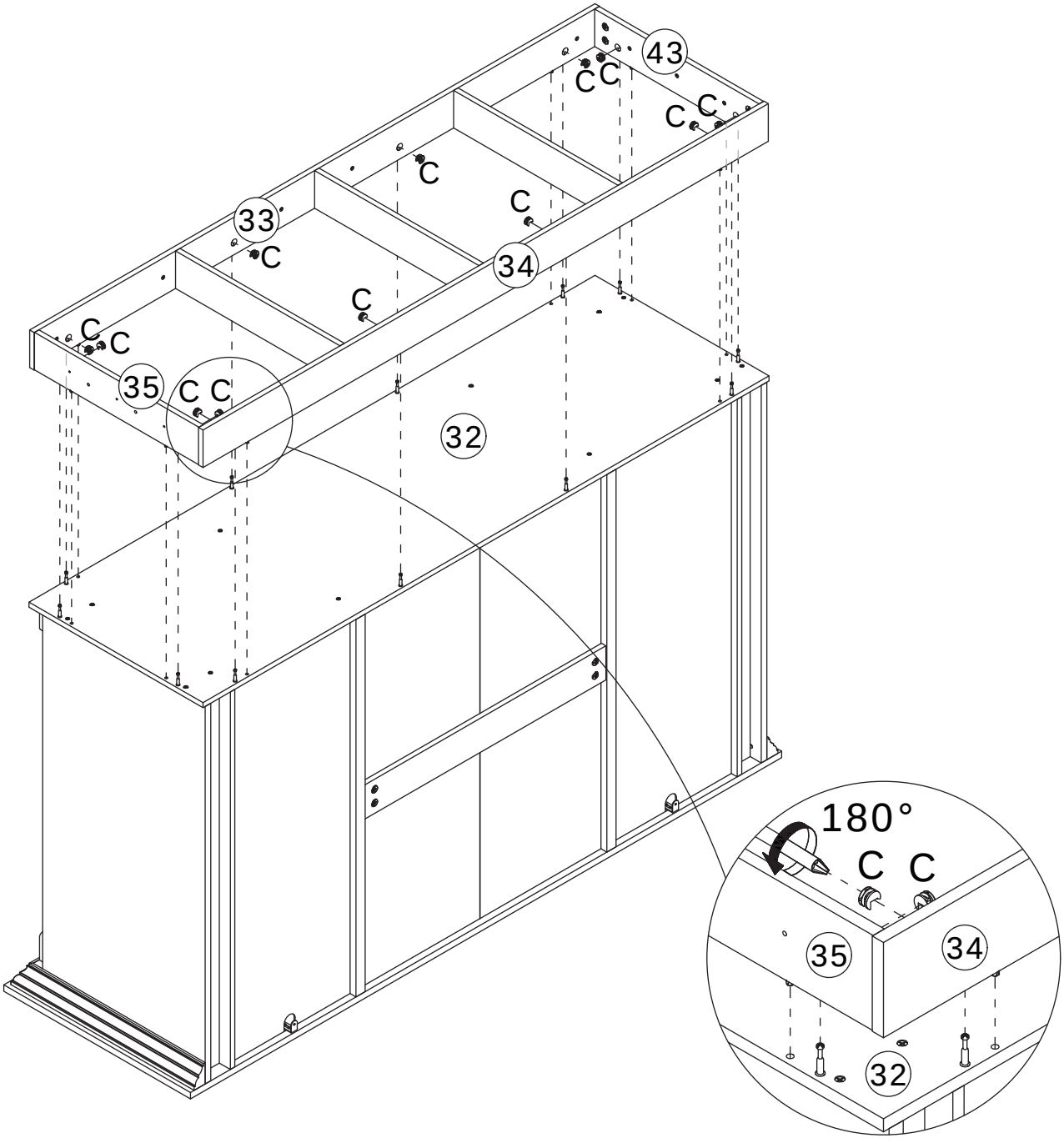

40

Q x 6	R x 4	
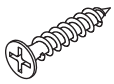		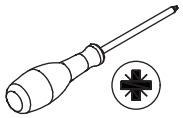
CRD3525A	CRF0620A	

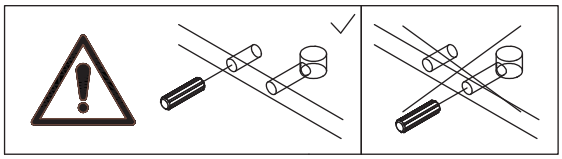

Connect panel 40 and 41 to panel 35 and 43 using wooden dowel (R), then secure them with screw (Q).

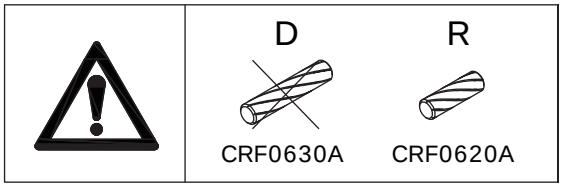

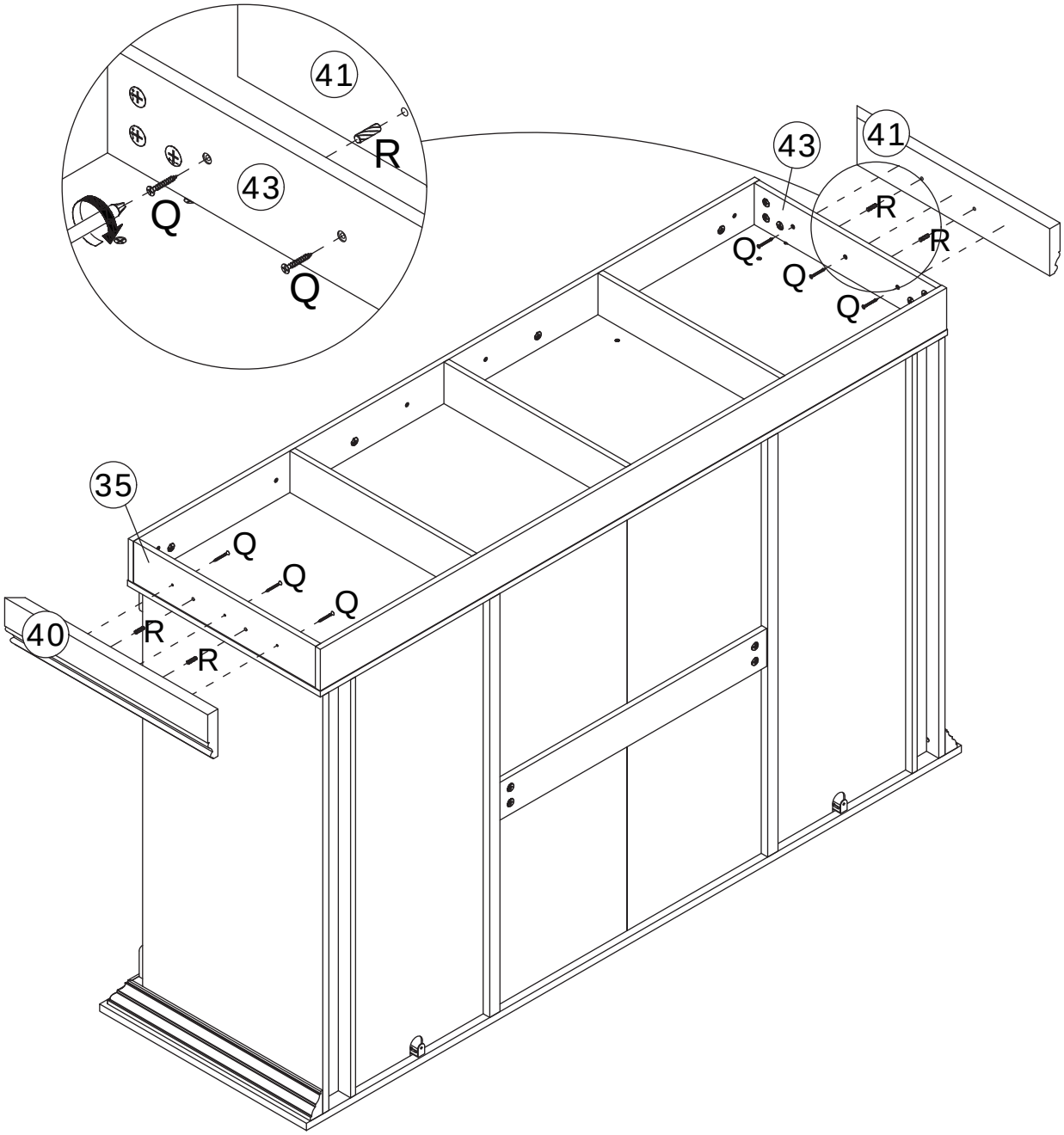

41

Q x 6	R x 2	
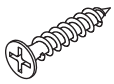		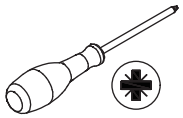
CRD3525A	CRF0620A	

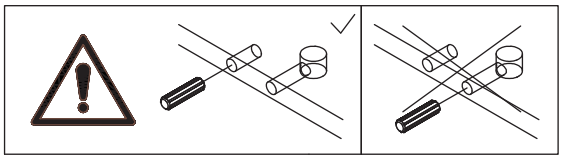

Connect panel 42 to panel 33 using wooden dowel (R) and secure them with screw (Q).

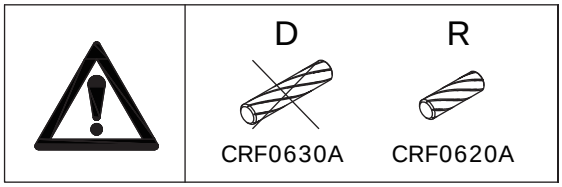

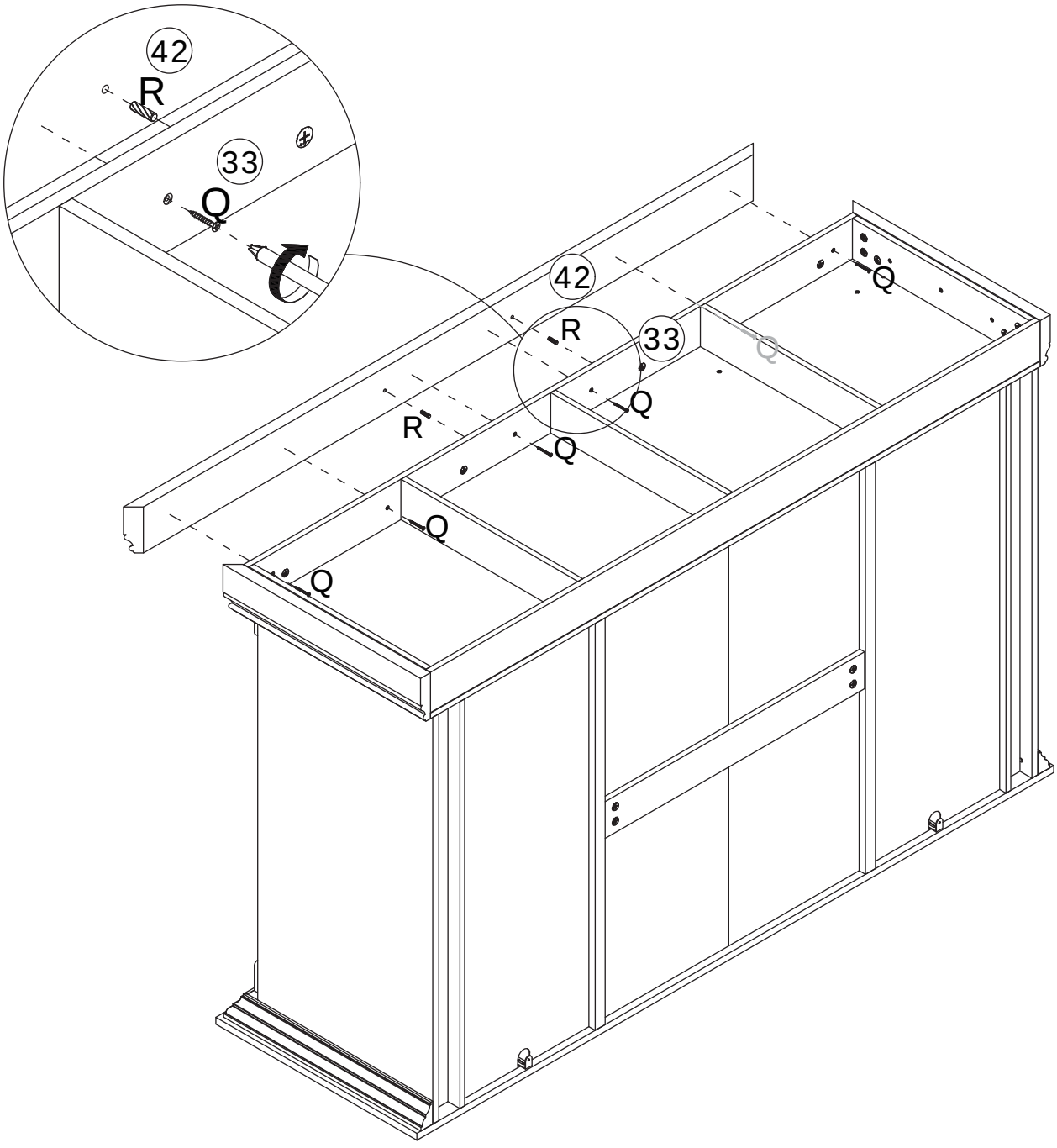

42

H x 4	J x 8	
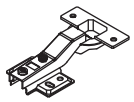 DGA861B	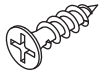 CRD3514A	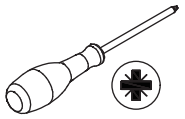

	J	L	N
	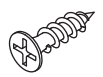 CRD3514A	 CRD3512A	 CRD0314A

Secure hinge (H) to panel 5 using screw (J).

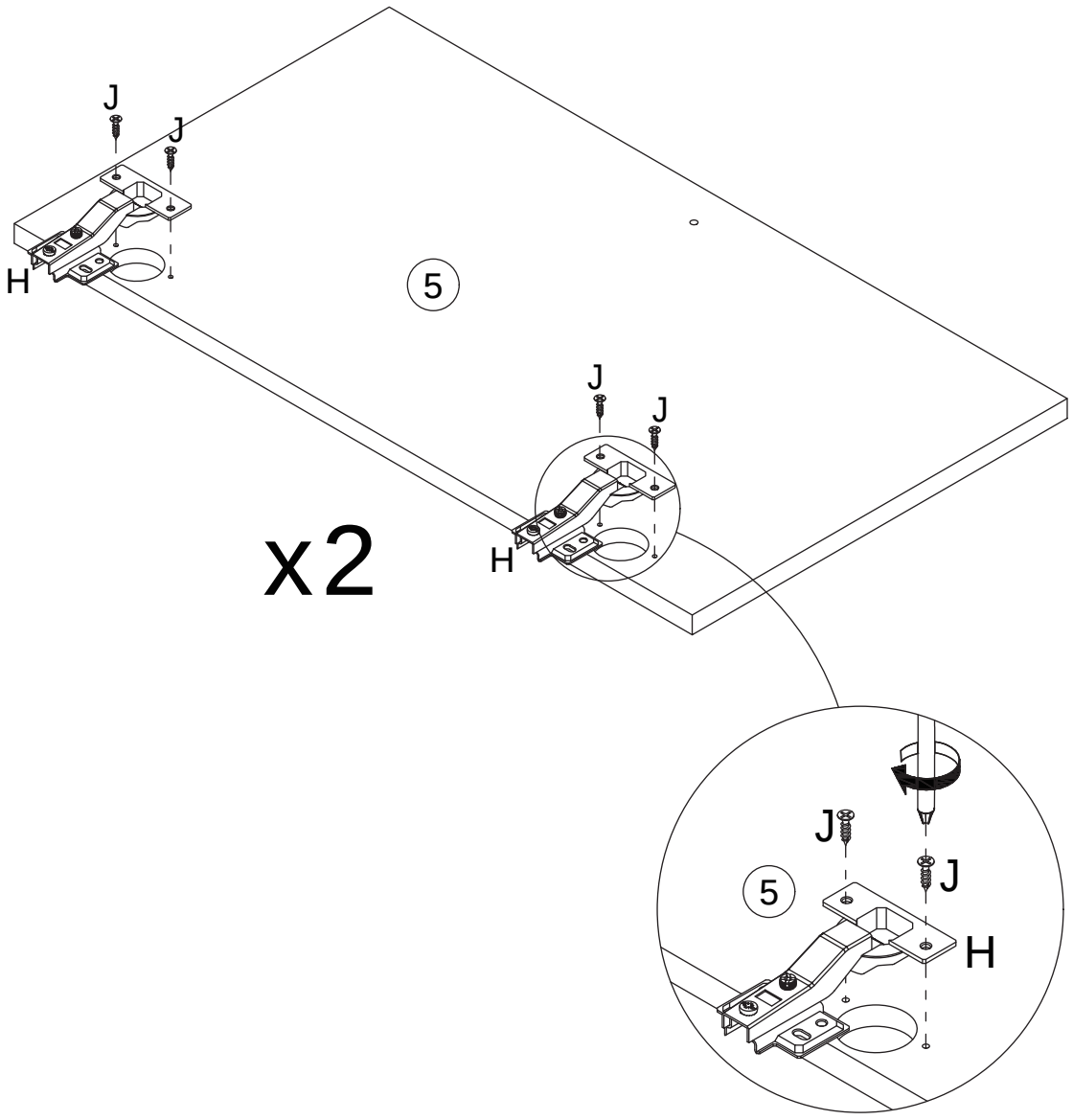

43

J x 16

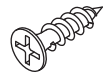

CRD3514A

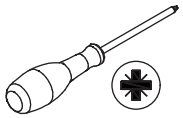



J	L	N
		
CRD3514A	CRD3512A	CRD0314A

Turn the cabinet upside down and attach panel 5 to panel 19 and 20 via hinges using screw (J).

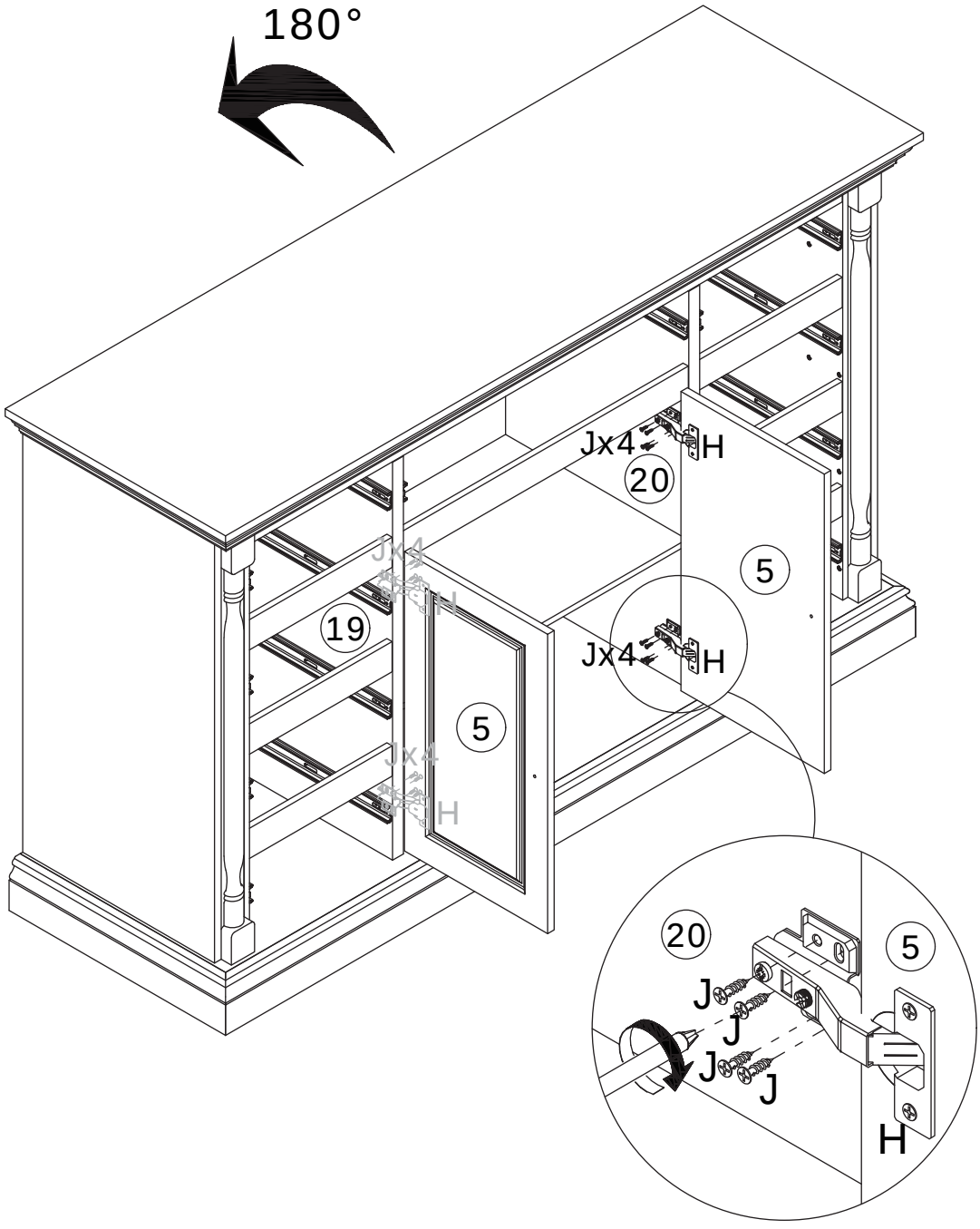

44

F x 2	G x 2	
	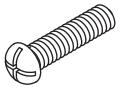 CRE0420A	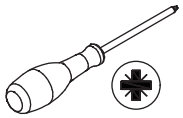

Secure knob (F) to panel 5 using screw (G).

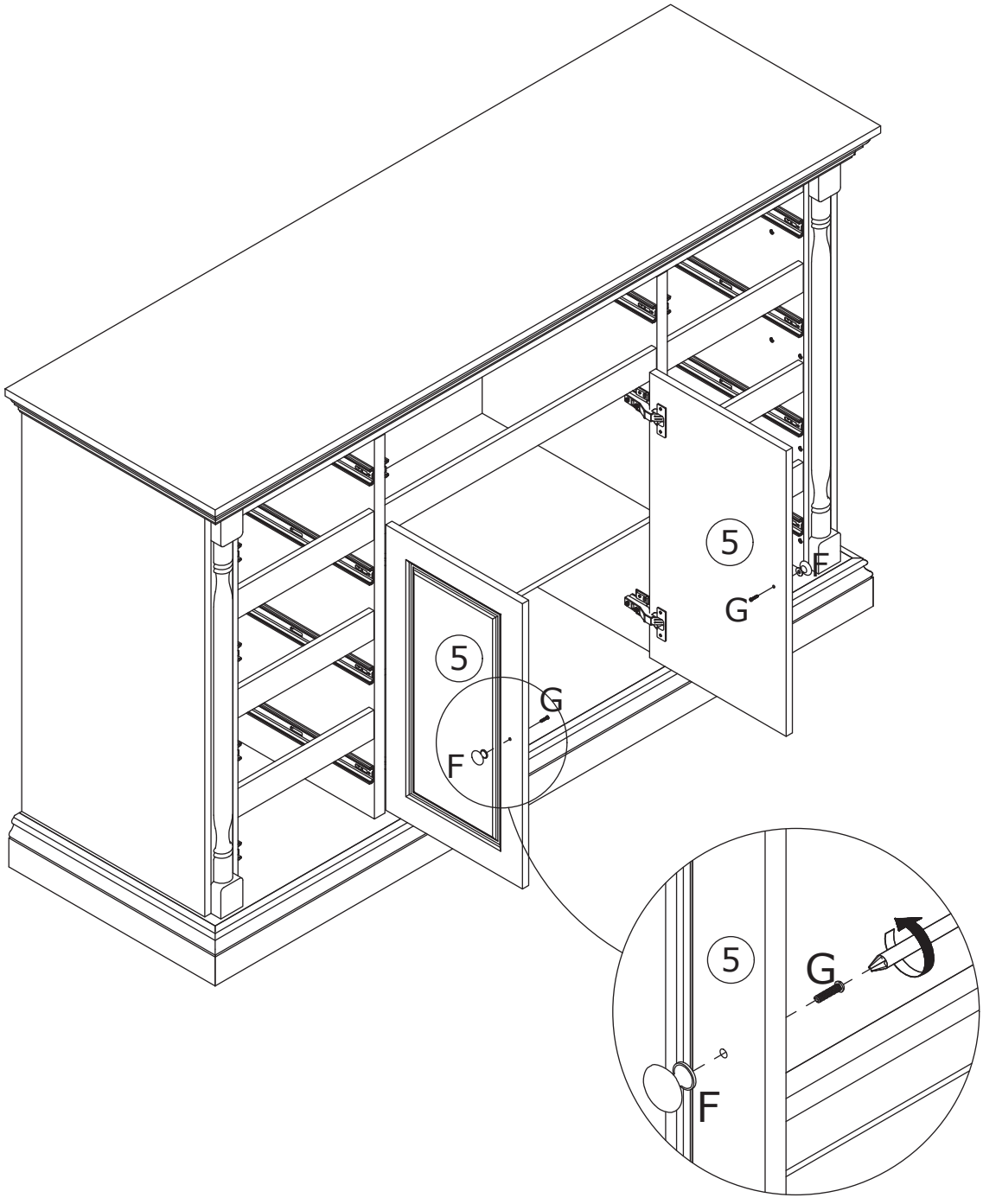

45

M x 20	N x 20	
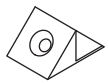	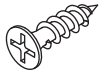 CRD0314A	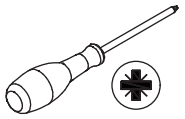

	J	L	N
	 CRD3514A	 CRD3512A	 CRD0314A

First, insert clip (M) into the available slots, then secure them with screw (N).

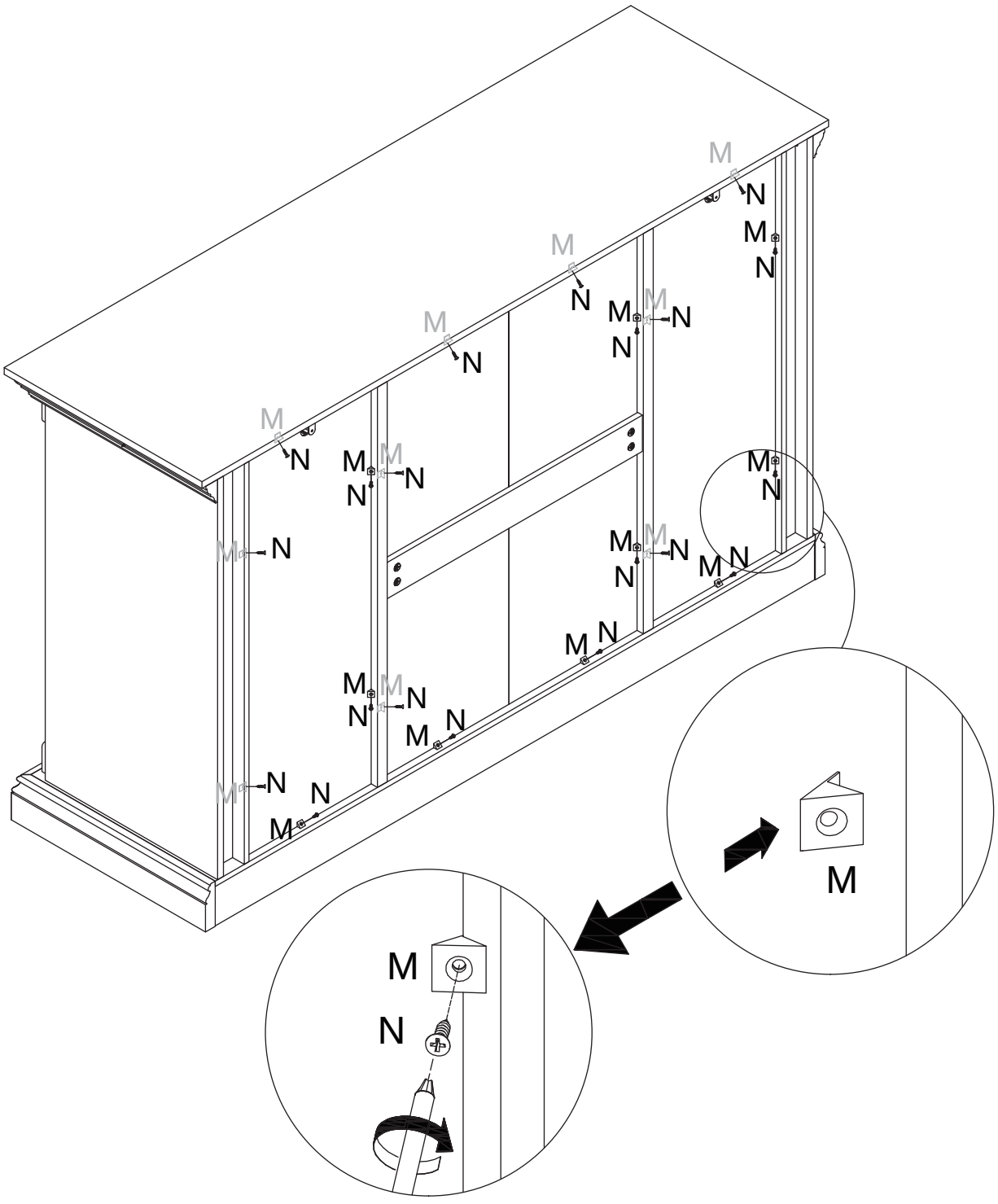
M
N
M
N
M
N

46

U x 2	V x 2	
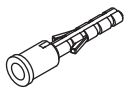	 CRD3535A	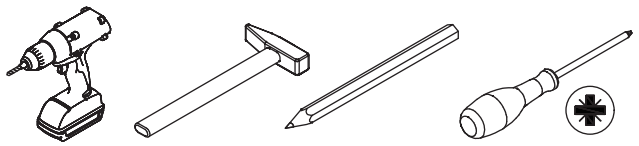

Install an anti-tip device.

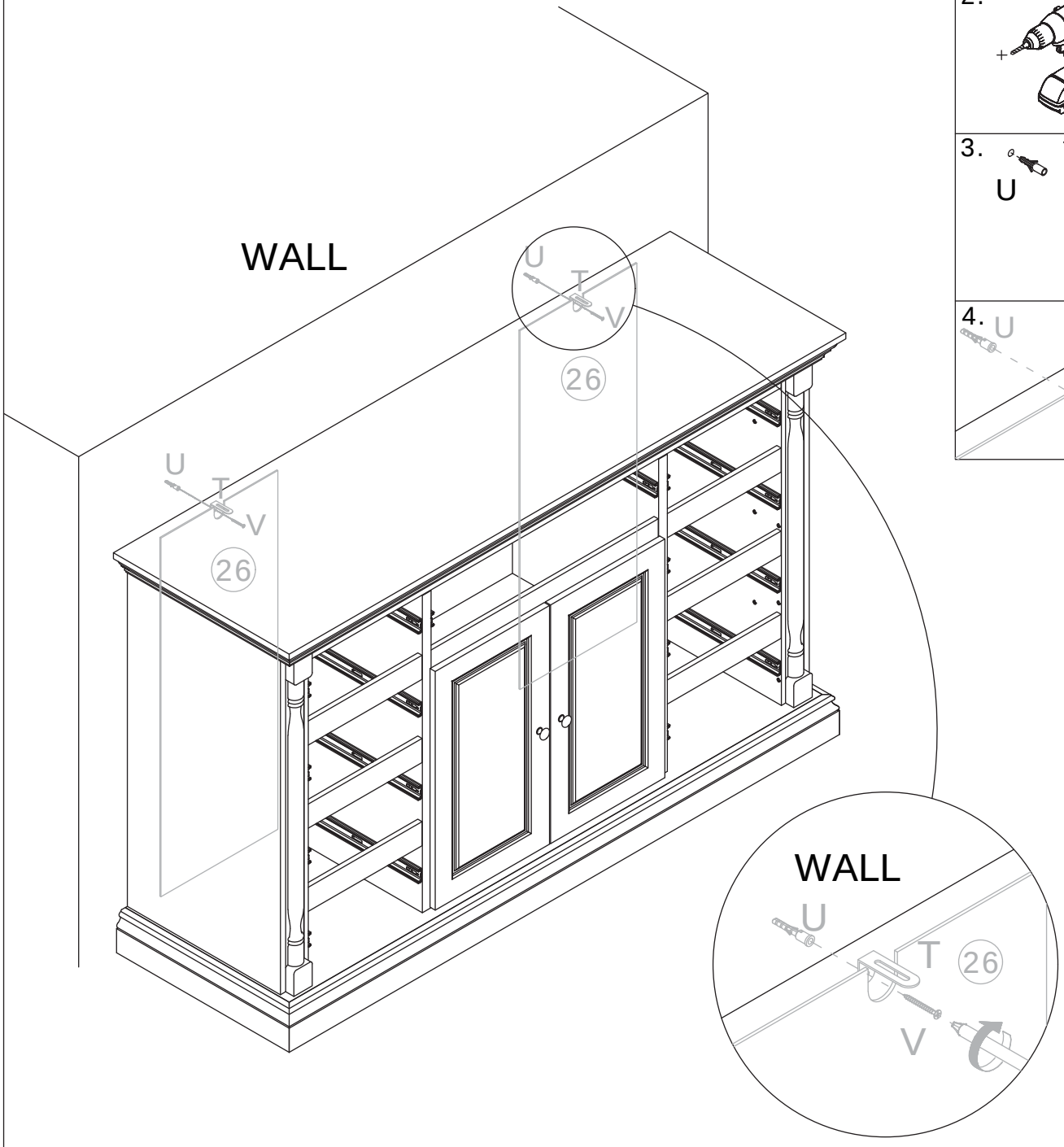

1

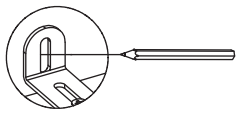

2.

3.

4.

47

A x 37	B x 37	
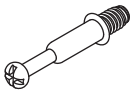 CRA0635B		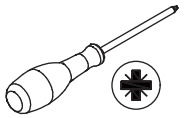

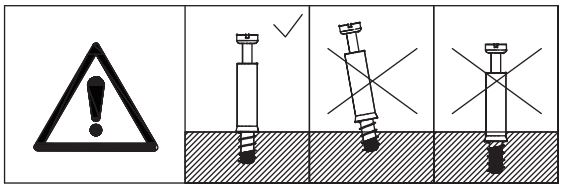

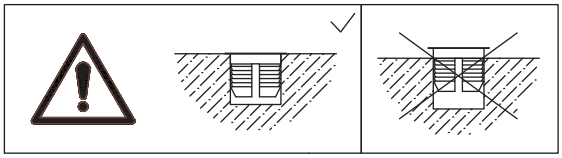

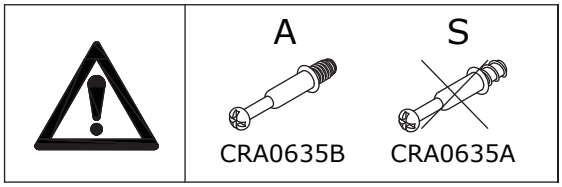

First, install plug (B) onto panel 2, 3, and 4, then screw self-tapping rod (A) into panel 2, 3, and 4.

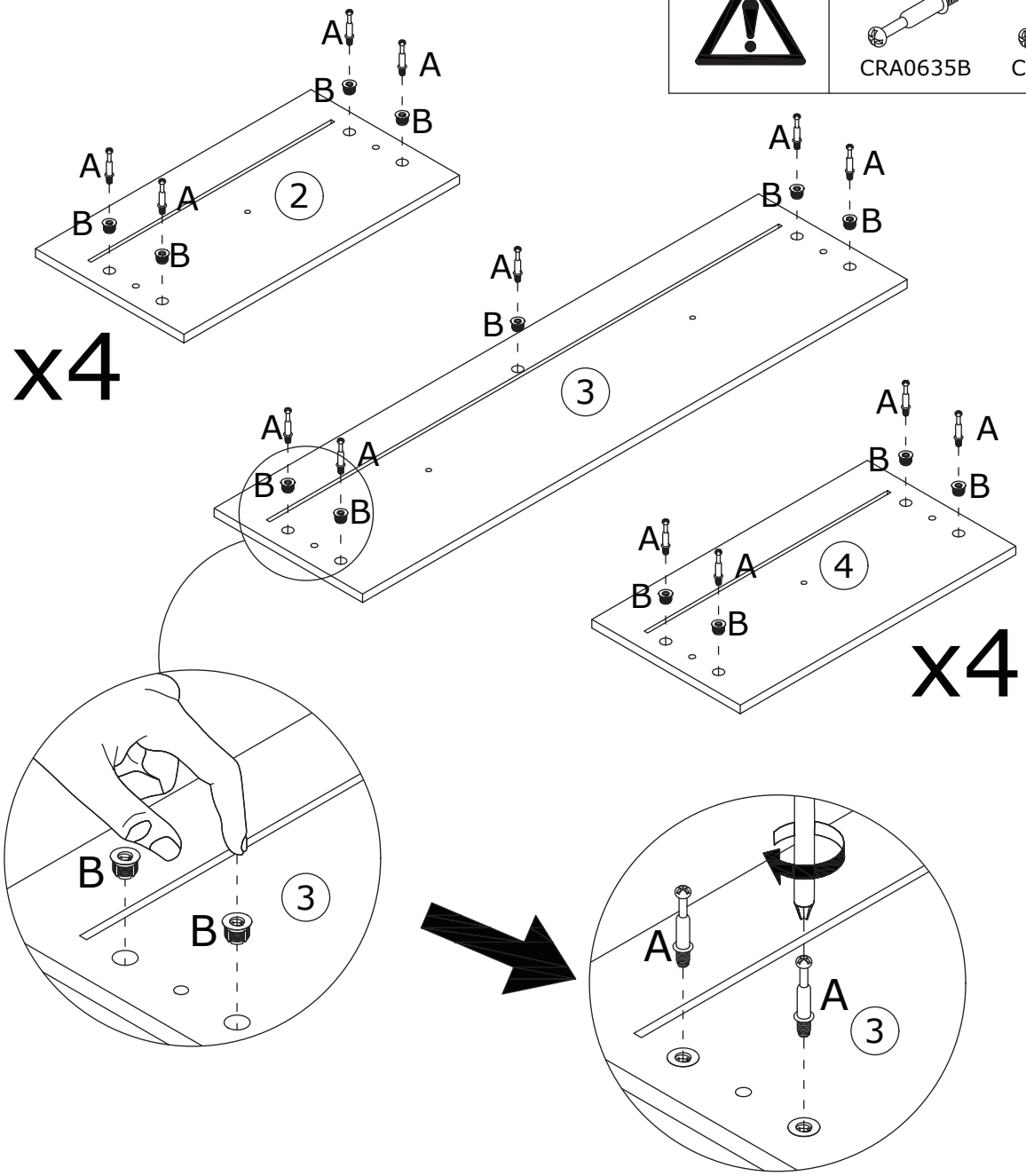

48

C x 37	D x 18	
 CRB1595A	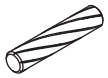 CRF0630A	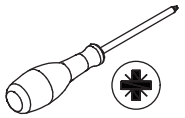

Connect panel 6 and 7 to panel 2, 3, and 4 using wooden dowel (D), then tighten by turning cam lock (C) clockwise.

Connect panel 12 to panel 3, then tighten by turning cam lock (C) clockwise.

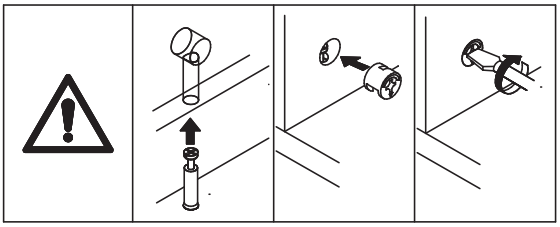

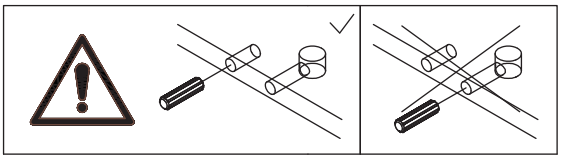

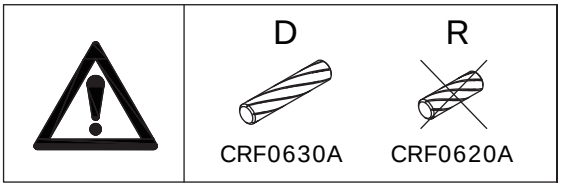

49

Insert panel 10 and 11 into the available slots.

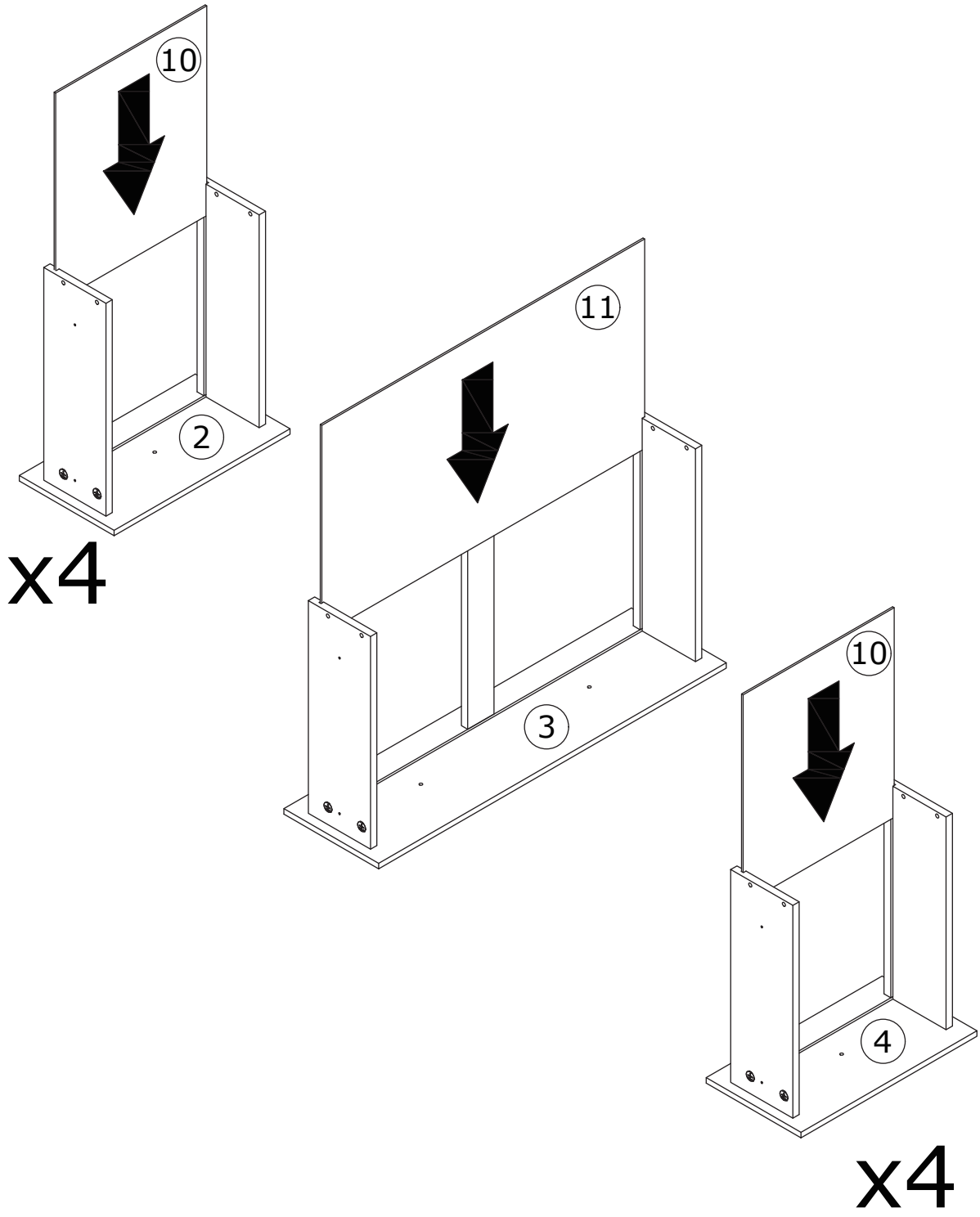

50

E x 37

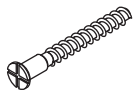

CRC0540A

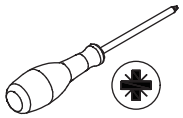

Secure panel 8 and 9 to the components using screw (E).

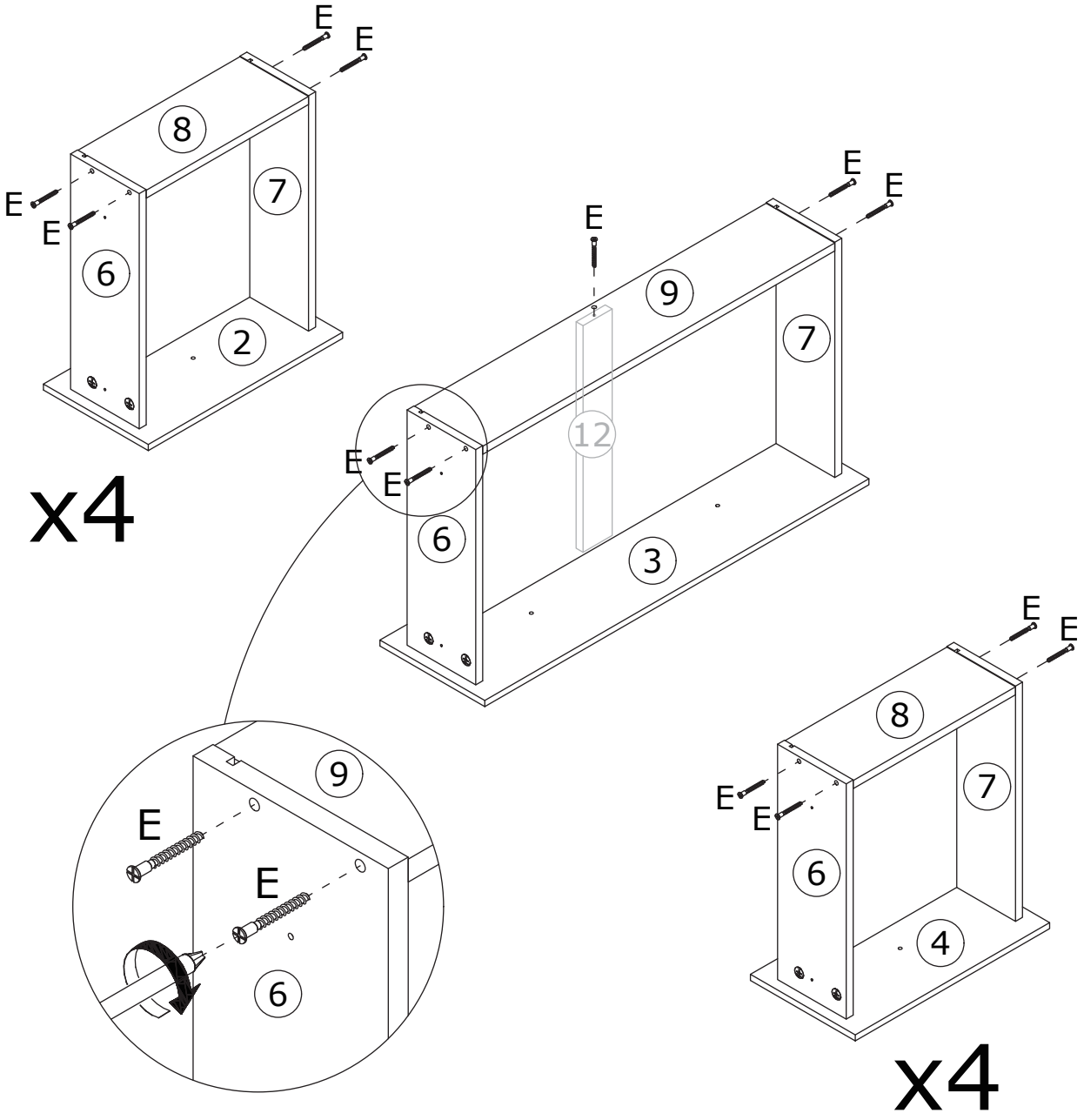

51

K x 9	L x 36	
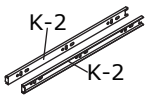 #3508 14''	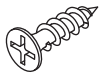 CRD3512A	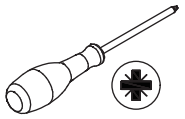

	J	L	N
	 CRD3514A	 CRD3512A	 CRD0314A



Secure slide rail (K-2) to panel 6 and 7 using screw (L).

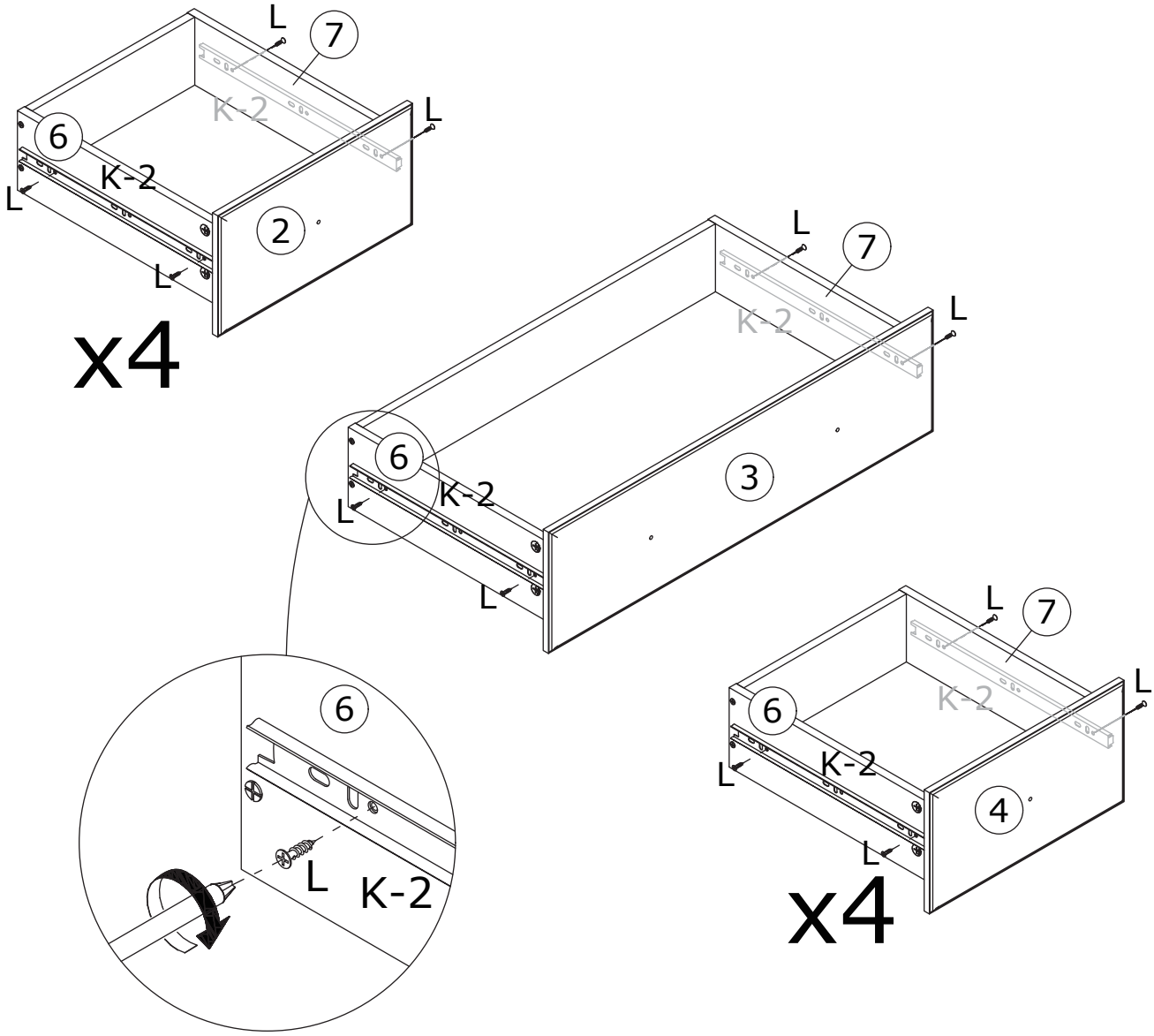

52

F x 10	G x 10	
	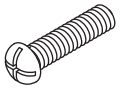 CRE0420A	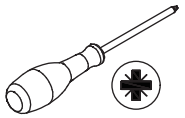

Secure knob (F) to panel 2, 3, and 4 using screw (G).

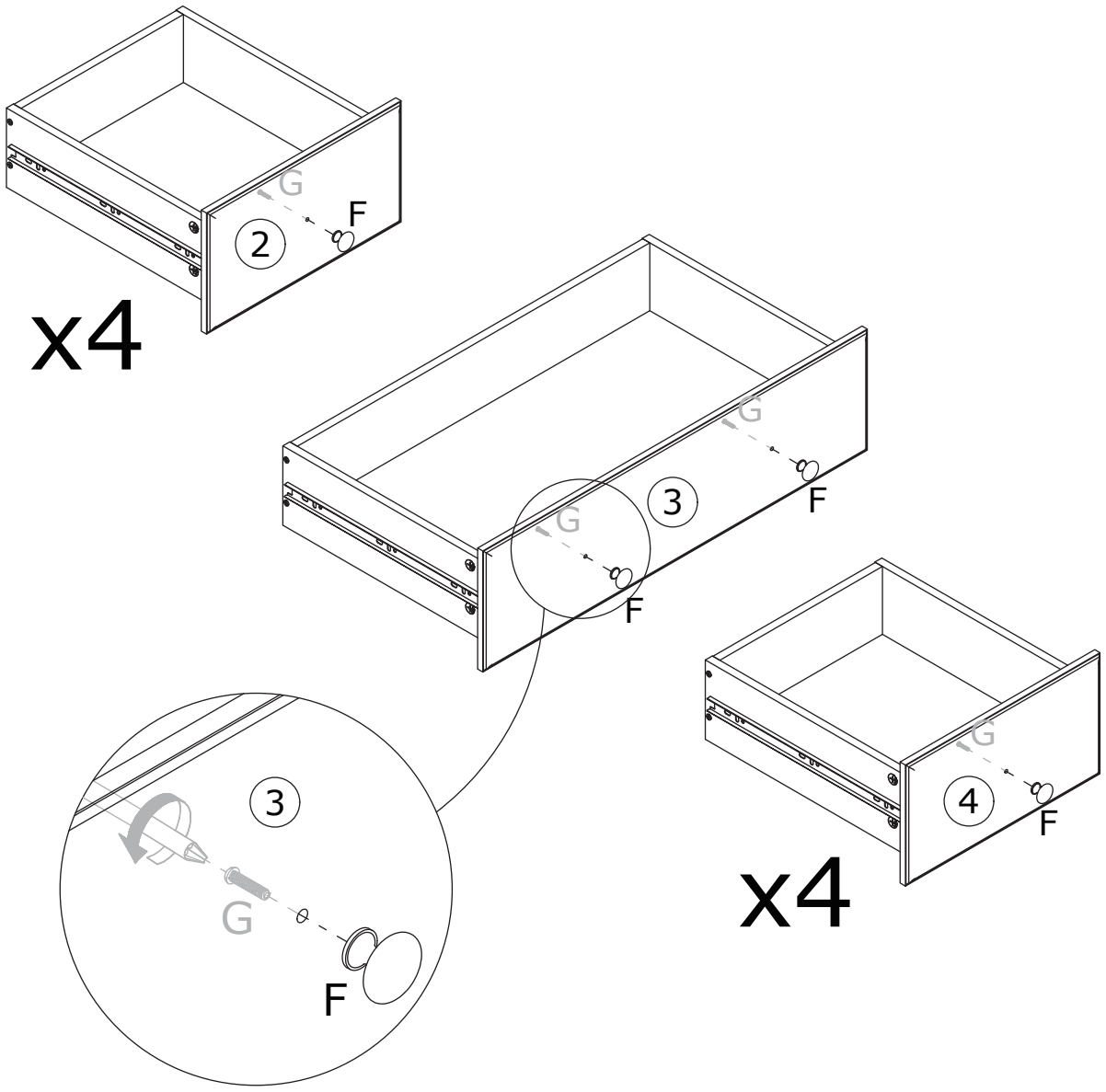

53

Insert the drawers into the main unit.

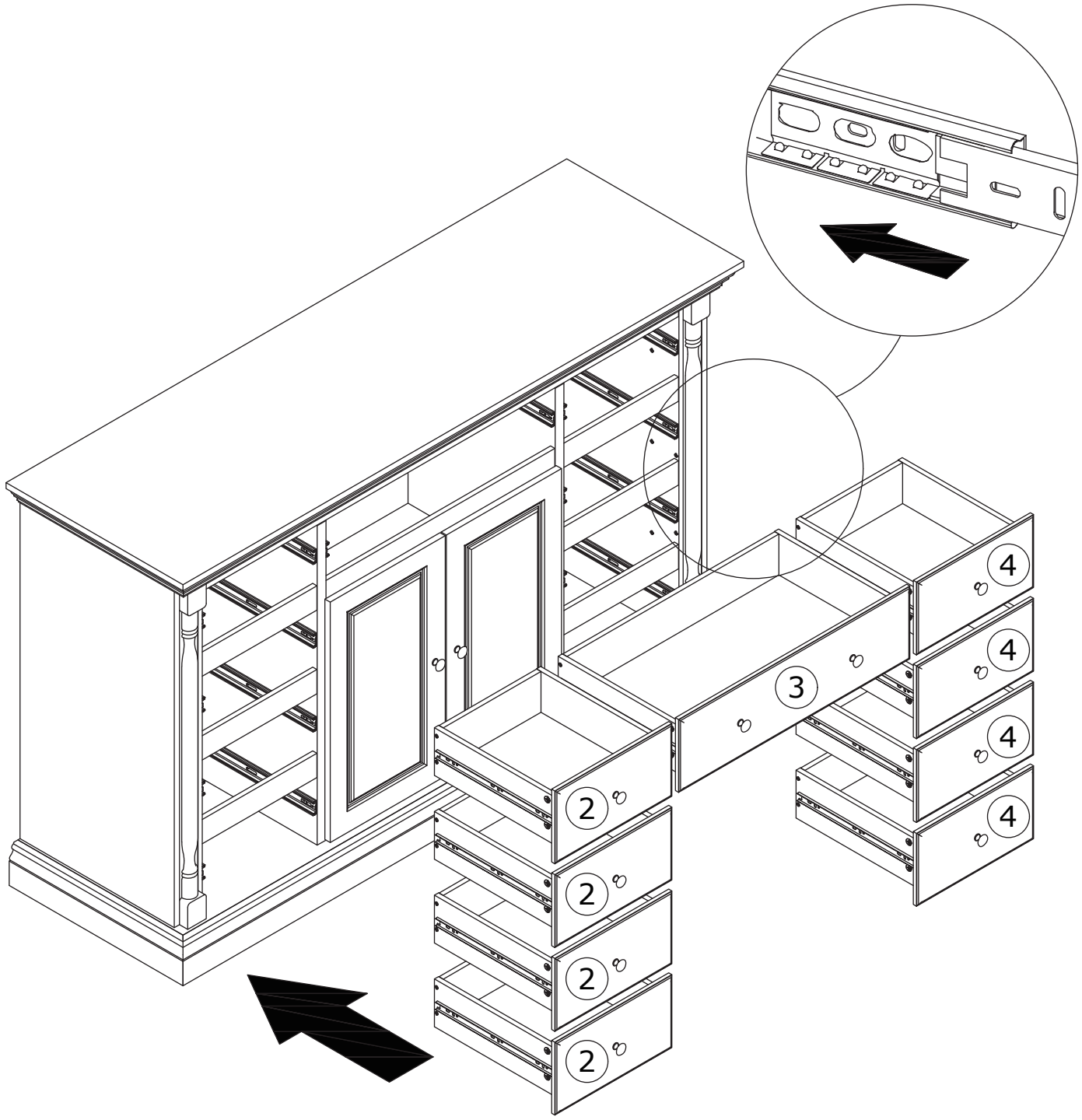

54

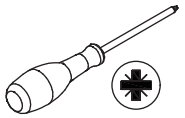

If the door panels are not aligned, please adjust the screws on the hinges according to the illustration.

Or you can search this link to view the teaching video.
https://youtu.be/n0Lb36SoODM

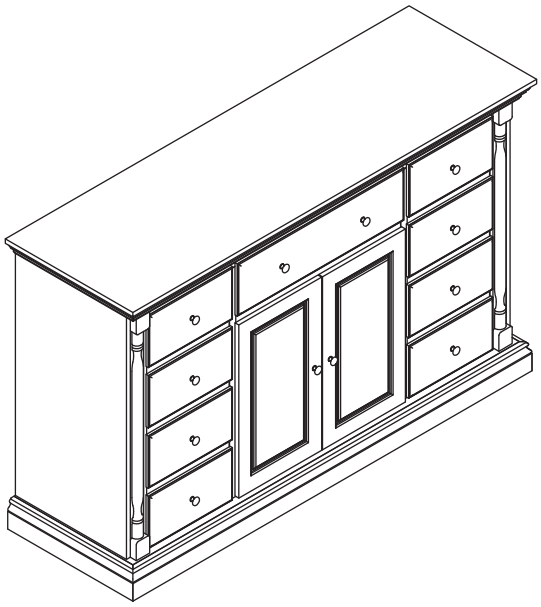

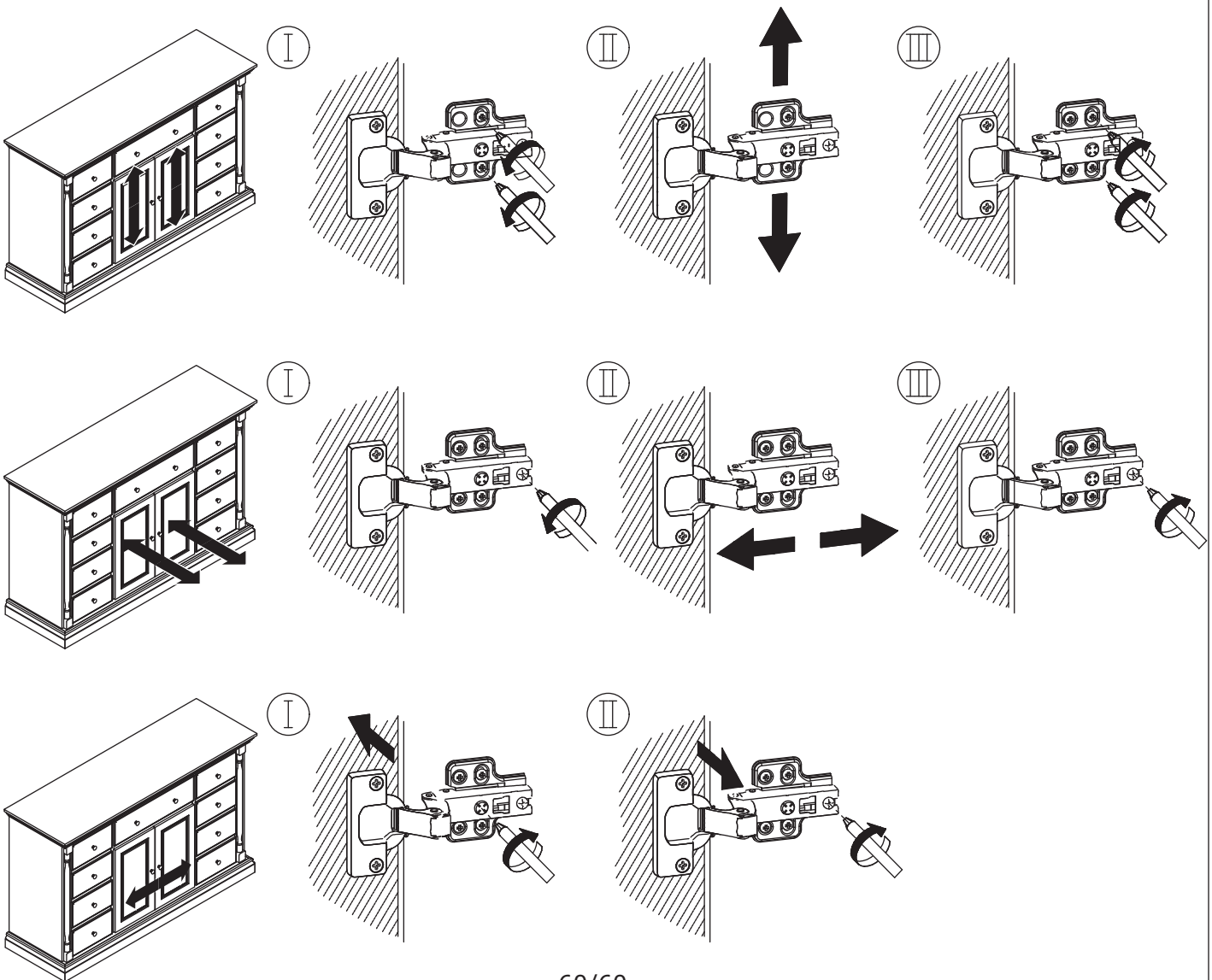

WARRANTY

WARRANTY CLAIMS

- There is a 30-day warranty for broken furniture or any other problems that do not work properly. The warranty will start from the date of purchase which must be verified by proof of purchase.

- Before making a claim, we may be able to answer your query, simply call us. Please leave your purchase order number, along with some details of the problem, if you want a replacement part. We will arrange within 48 hours. If there is out of stock, we will reply with a shipping date.

- The product must be used in accordance with the instructions provided. For health reasons.

- For other reasons, if the furniture needs to be returned, it must be cleaned and dried and operated within 30 days of receipt.

Type of Warranty Claim

- Failure to follow the furniture instructions will invalidate the warranty. Attention please.

- Does not include damage during installation, but includes damage during transportation.

Scope of responsibility

- Shall not bear any responsibility for misuse or user damage and / or loss of parts during the installation of furniture.

- After using, the damage and scratches of the furniture are not covered by the warranty.

The Warranty Relates to All Bought in The Us and Covers The Following Areas

- Sheet parts: 1 month from the date of purchase.

- Electrical parts: 1 month from the date of purchase.

RETURNS

CHANGED YOUR MIND AND NEED TO RETURN YOU ITEM?

PLEASE FOLLOW THE BELOW INSTRUCTIONS:

- If you have purchased and have simply changed your mind, follow the retailer's instructions for returns.

DEFECTIVE ITEMS

- If your item is defective in any way, i.e. it doesn't work but you can't identify why, in the first instance, please call us.

DAMAGED ITEMS

- If you receive an order with obvious shipping damage from the retailer, then we suggest the delivery is refused. If the delivery has been accepted and then shipping damage is found, please follow the specific instructions advised by the retailer.
  In all circumstances please save all packaging material and paperwork for the order. Please be aware that if you dispose of packaging material or attempt to return the merchandise without contacting the fulfiller, you jeopardise your chances of making a claim, and you may not receive a credit for the return.

AFTER-SALES CONTACT


adelahu@fufugaga.com


208-820-0068