ASSEMBLY INSTRUCTION

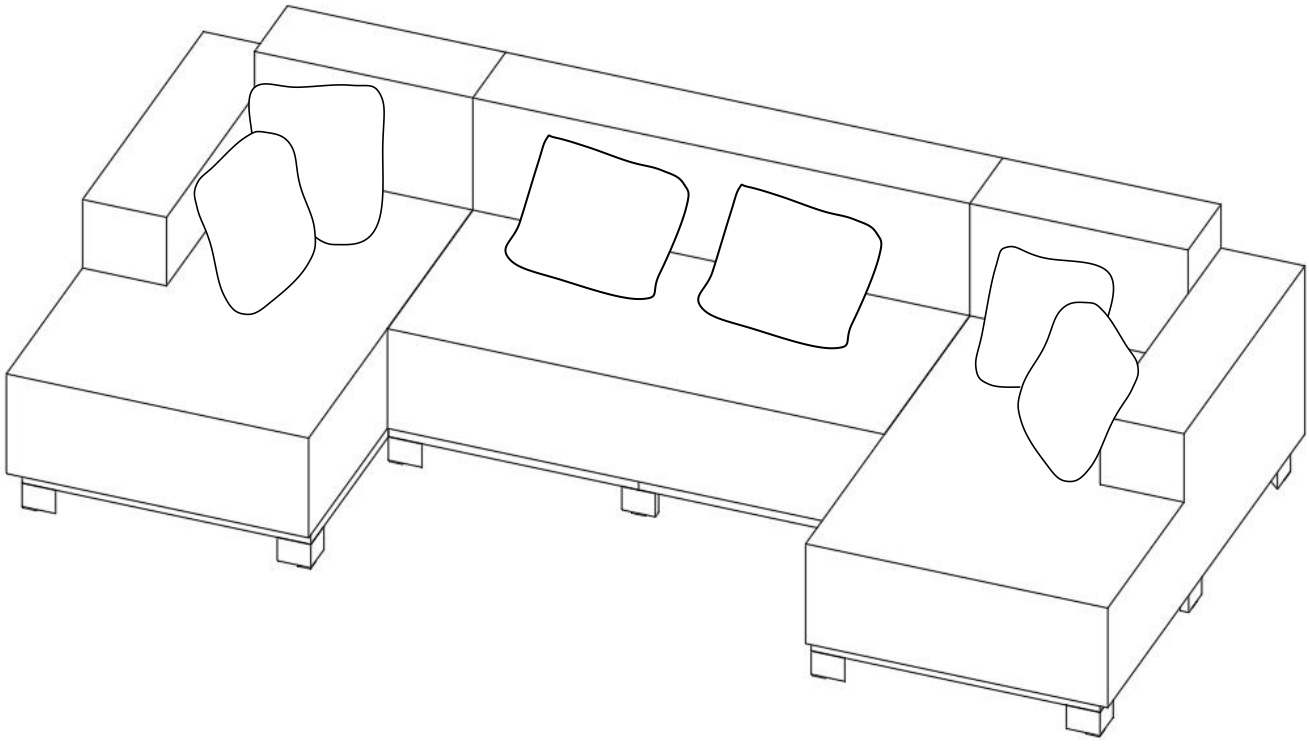

COMPONENT LIST

NO	DRAWING	QTY	DESCRIPTION
B	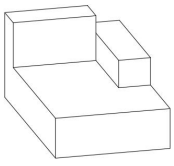	1	Left-side sofa
D	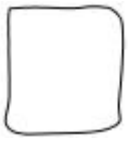	2	Pillow
E		10	Round Tube
F		1	H-shaped Round Tube
G		2	Square Tube 1
H		1	Square Tube 2
I		2	Square Tube 4
L	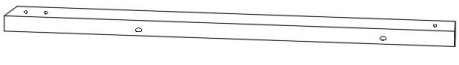	1	Square Tube 3
O	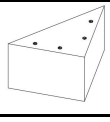	4	Triangular Sofa Leg
P	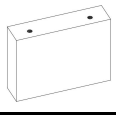	2	Rectangular Sofa Leg
R	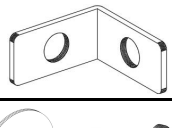	4	L-Shaped Gasket
V	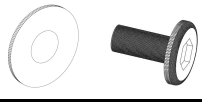	12	Bolt15mm
U		20	Bolt70mm

COMPONENT LIST

NO	DRAWING	QTY	DESCRIPTION
C	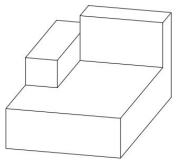	1	Right-side sofa
D	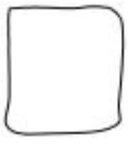	2	Pillow
E		10	Round Tube
F		1	H-shaped Round Tube
G		1	Square Tube 1
H		2	Square Tube 2
I	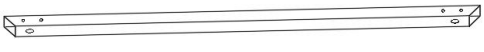	2	Square Tube 4
K	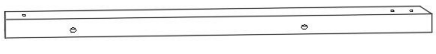	1	Square Tube 3
O	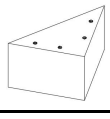	4	Triangular Sofa Leg
P	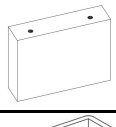	2	Rectangular Sofa Leg
R	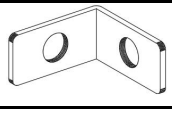	4	L-Shaped Gasket
V	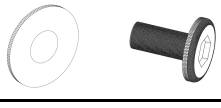	12	Bolt15mm
U		20	Bolt70mm

COMPONENT LIST

NO	DRAWING	QTY	DESCRIPTION
A	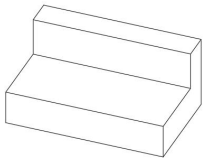	1	Middle sofa
D	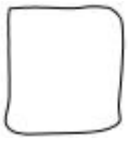	2	Pillow
E		10	Round Tube
F		1	H-shaped Round Tube
J		2	Square Tube 3
M		2	Square Tube 2
N		2	Square Tube 1
O	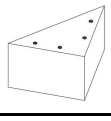	4	Triangular Sofa Leg
P	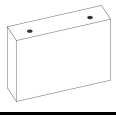	2	Rectangular Sofa Leg
Q		4	Tie Rod Screw
R	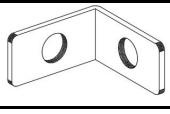	4	L-Shaped Gasket
S	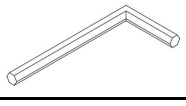	2	Allen Screwdriver
T	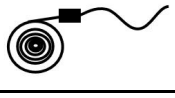	1	LED Strip Light
V	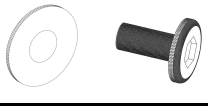	12	Bolt15mm
U		20	Bolt70mm

COMPONENT LIST

NO	DRAWING	QTY	DESCRIPTION
W		1	Box Opener

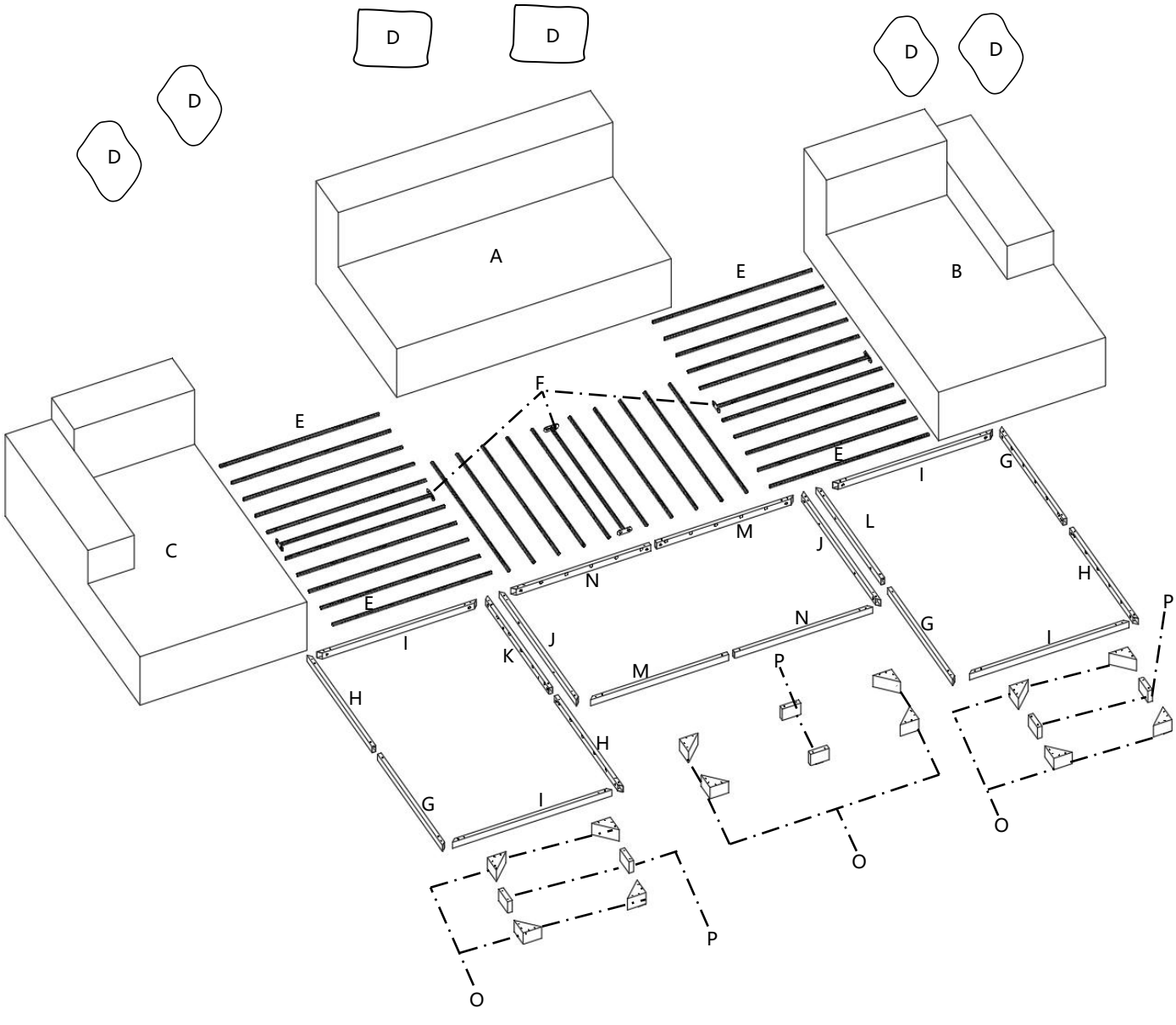

Q  x4pc

R 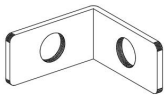 x12pc

S 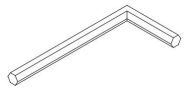 x2pc

T 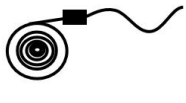 x1pc

U  x60pc

V 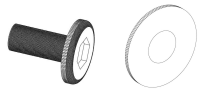 x36pc

W  x1pc

PARTS LIST

A 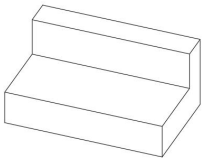	B 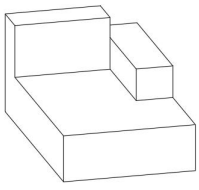	C 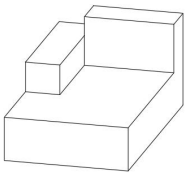	D 	E 
Middle sofa x1PC	Left-side sofa x1PC	Right-side sofa x1PC	Pillow x6PC	Round Tube x30PC
F 	G 	H 	I 	J 
H-shaped Round Tube x3PC	Square Tube 1 x3PC	Square Tube 2 x3PC	Square Tube 3 x4PC	Square Tube 4 x2PC
K 	L 	M 	N 	O 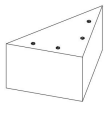
Square Tube 5 x1PC	Square Tube 6 x1PC	Square Tube 7 x2PC	Square Tube 8 x2PC	Triangular Sofa Leg x12PC
P 	T 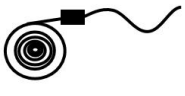	W 		
Rectangular Sofa Leg x6PC	LED Strip Light x1PC	Box Opener x1PC		

HARDWARE

Q 	R 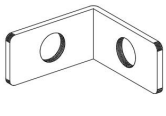	S 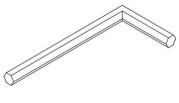	U 	V 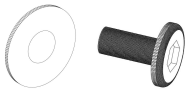
Tie Rod Screw x4PC	L-Shaped Gasket x12PC	Allen Screwdriver x2PC	Bolt70mm x60PC	Bolt15mm x36PC

*** Take out the** B D E F G H I L O P R U V

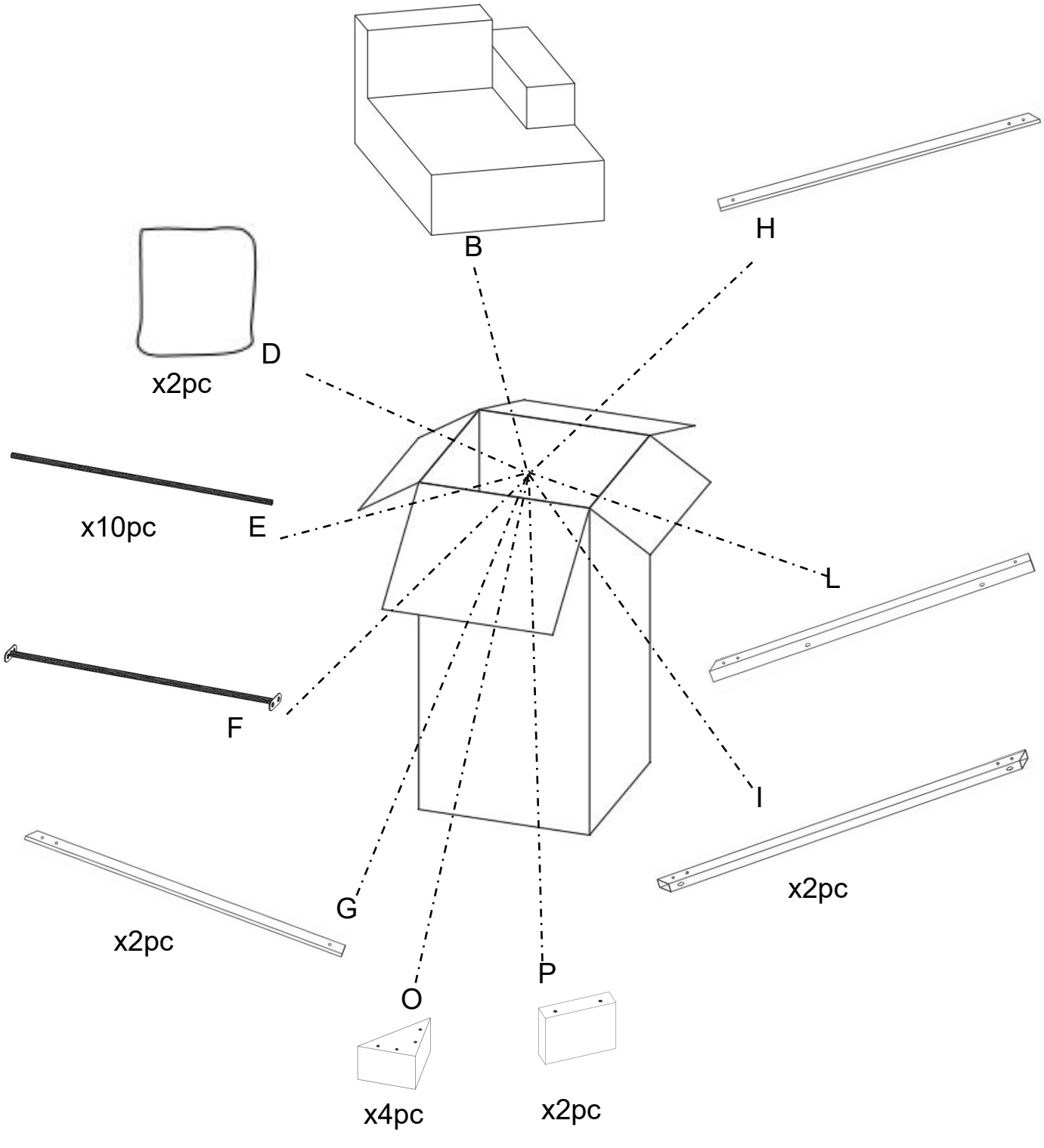

R 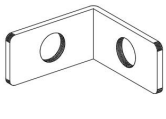 x4pc U  x20pc V 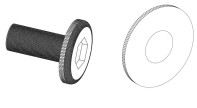 x12pc

*** Take out the** C D E F G H I K O P R U V

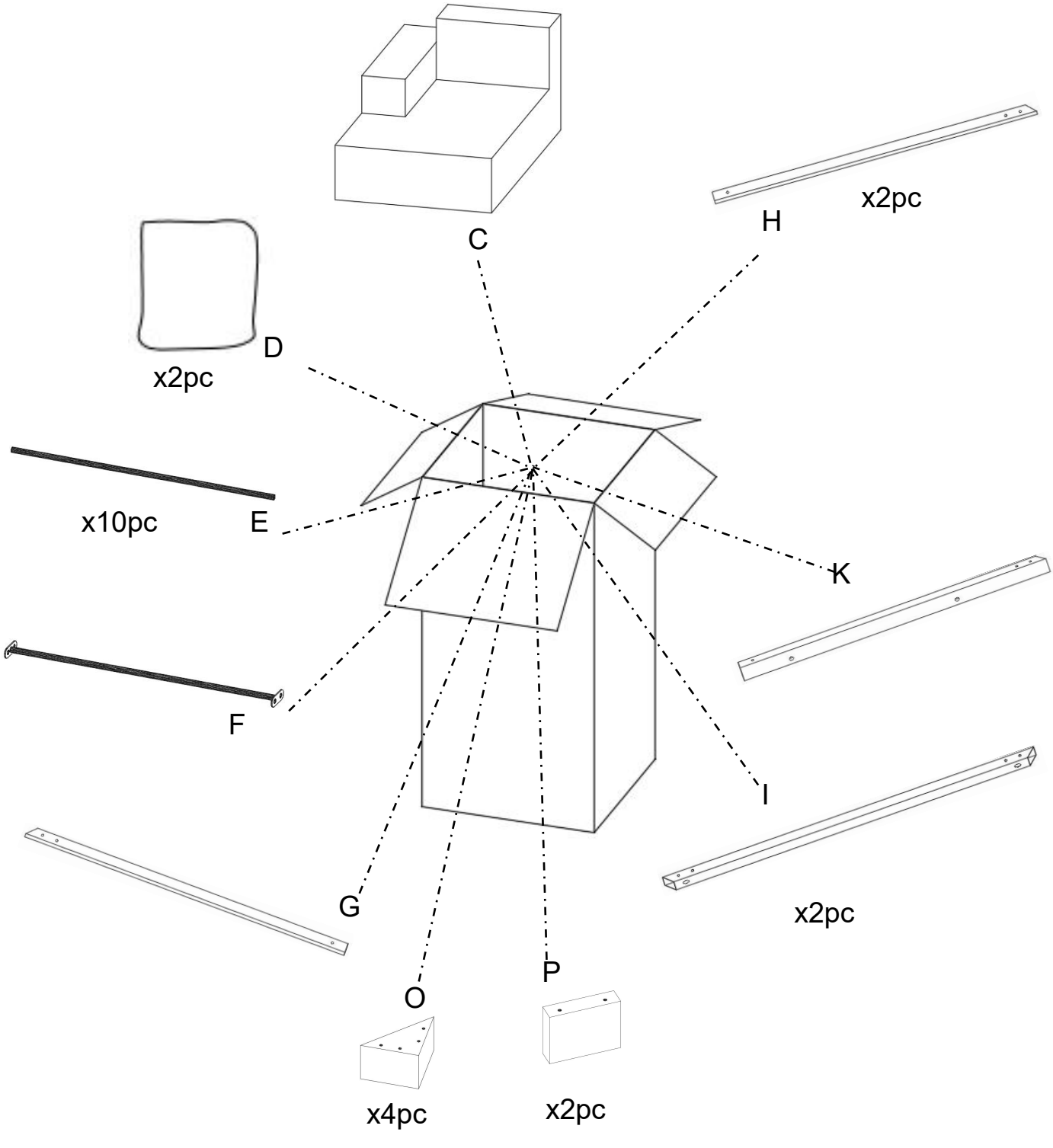

R 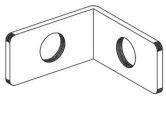 x4pc U  x20pc V 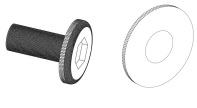 x12pc

*** Take out the** A D E F J M N O P Q R S T U V W

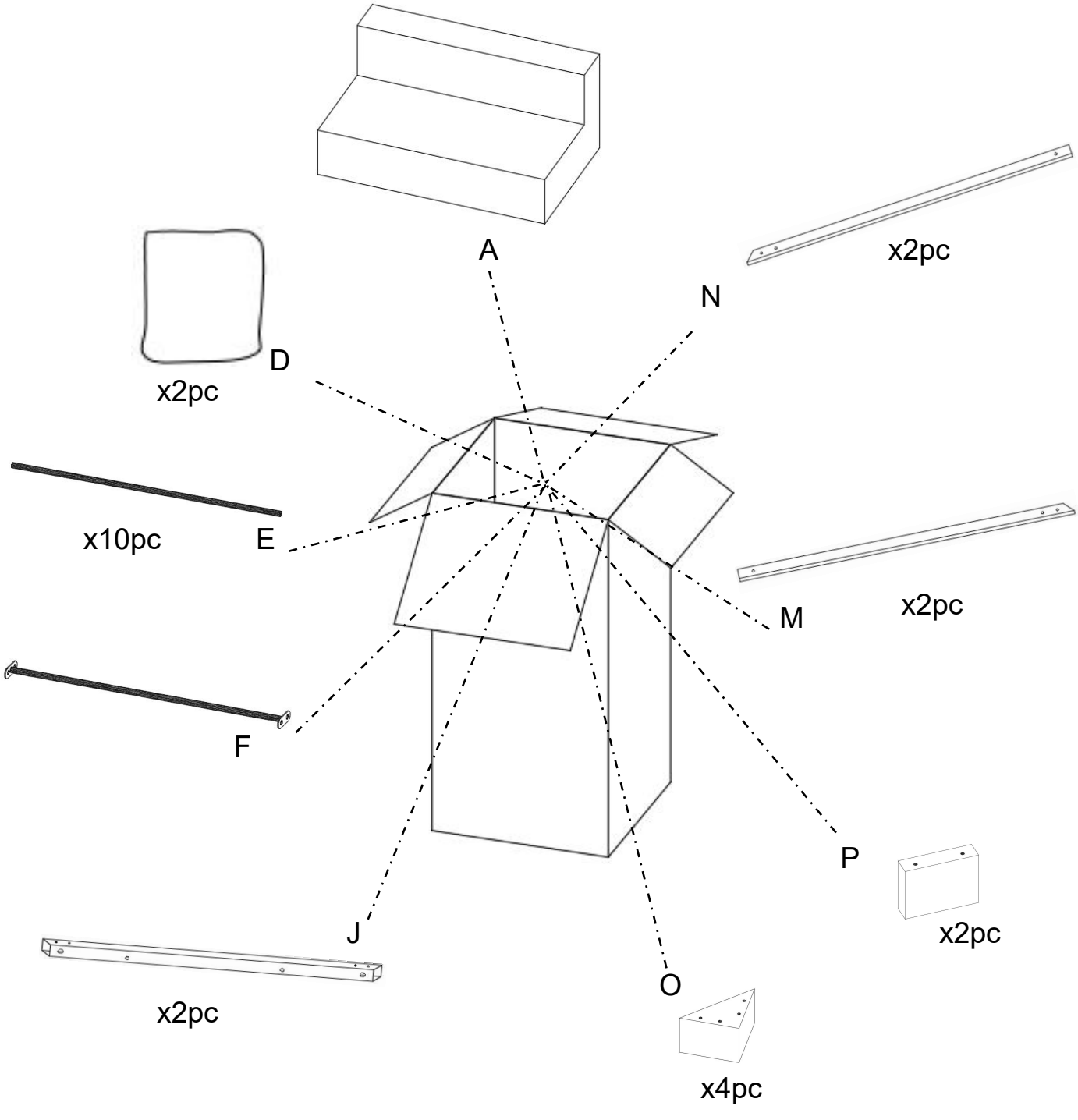

Q  x4pc

R 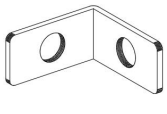 x4pc

S 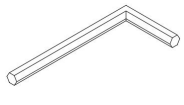 x2pc

T 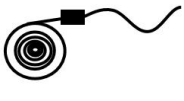 x1pc

U  x20pc

V 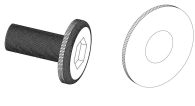 x12pc

W  x1pc

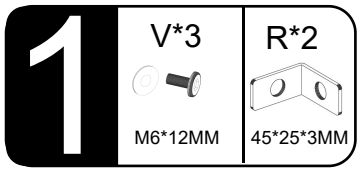
1
V*3
M6*12MM
R*2
45*25*3MM

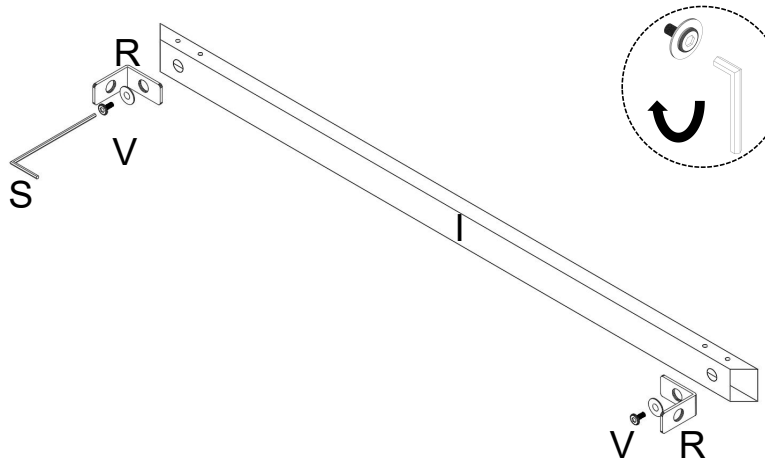
R
V
S
I
V
R

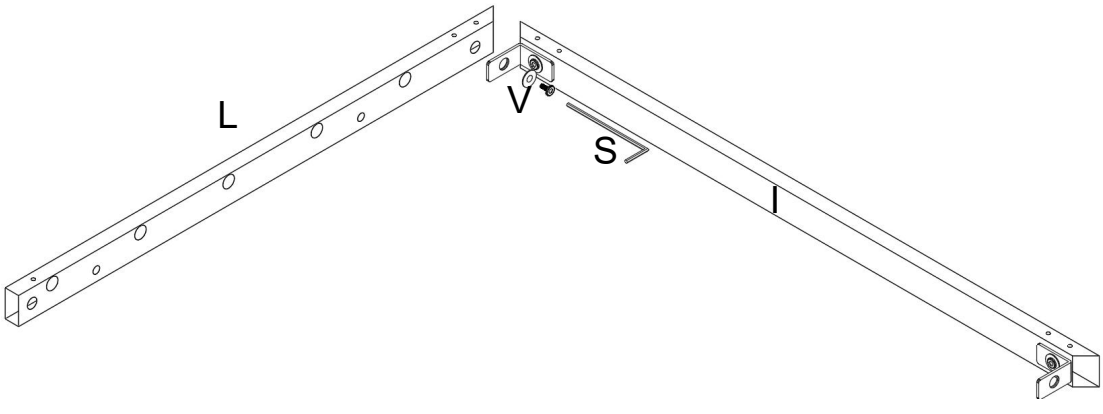
L
V
S
I

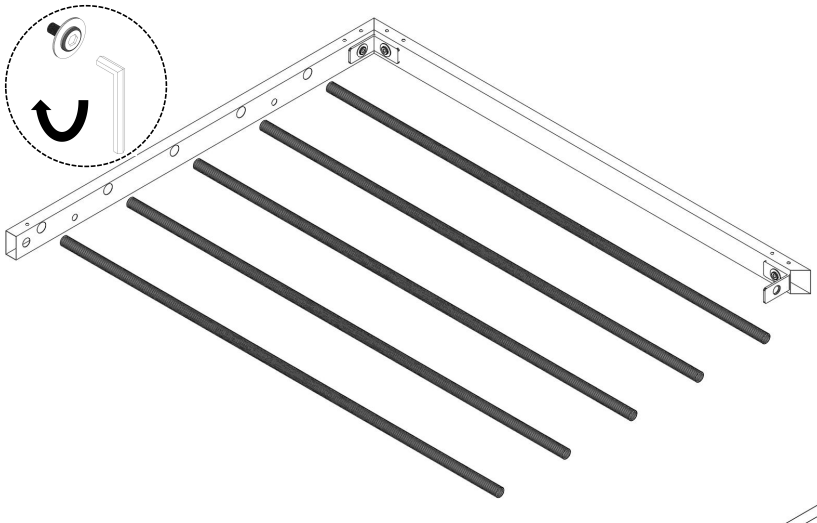

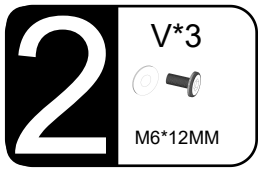
2
V*3
M6*12MM

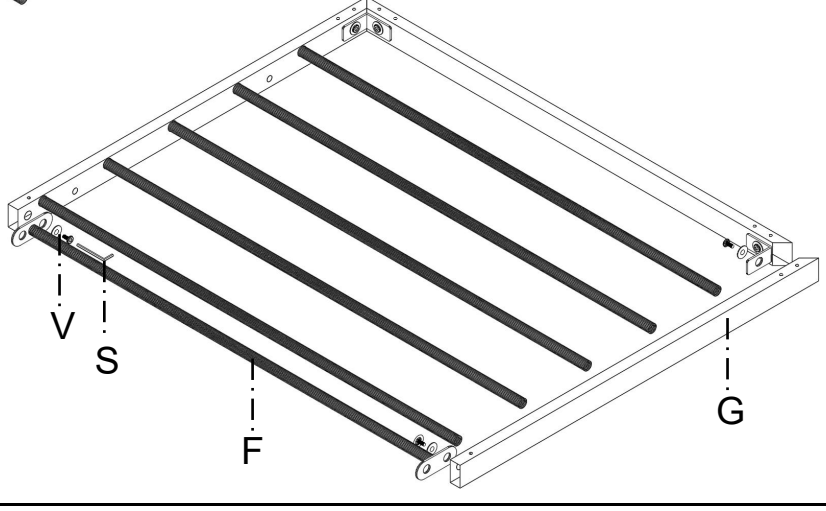
V
S
F
G

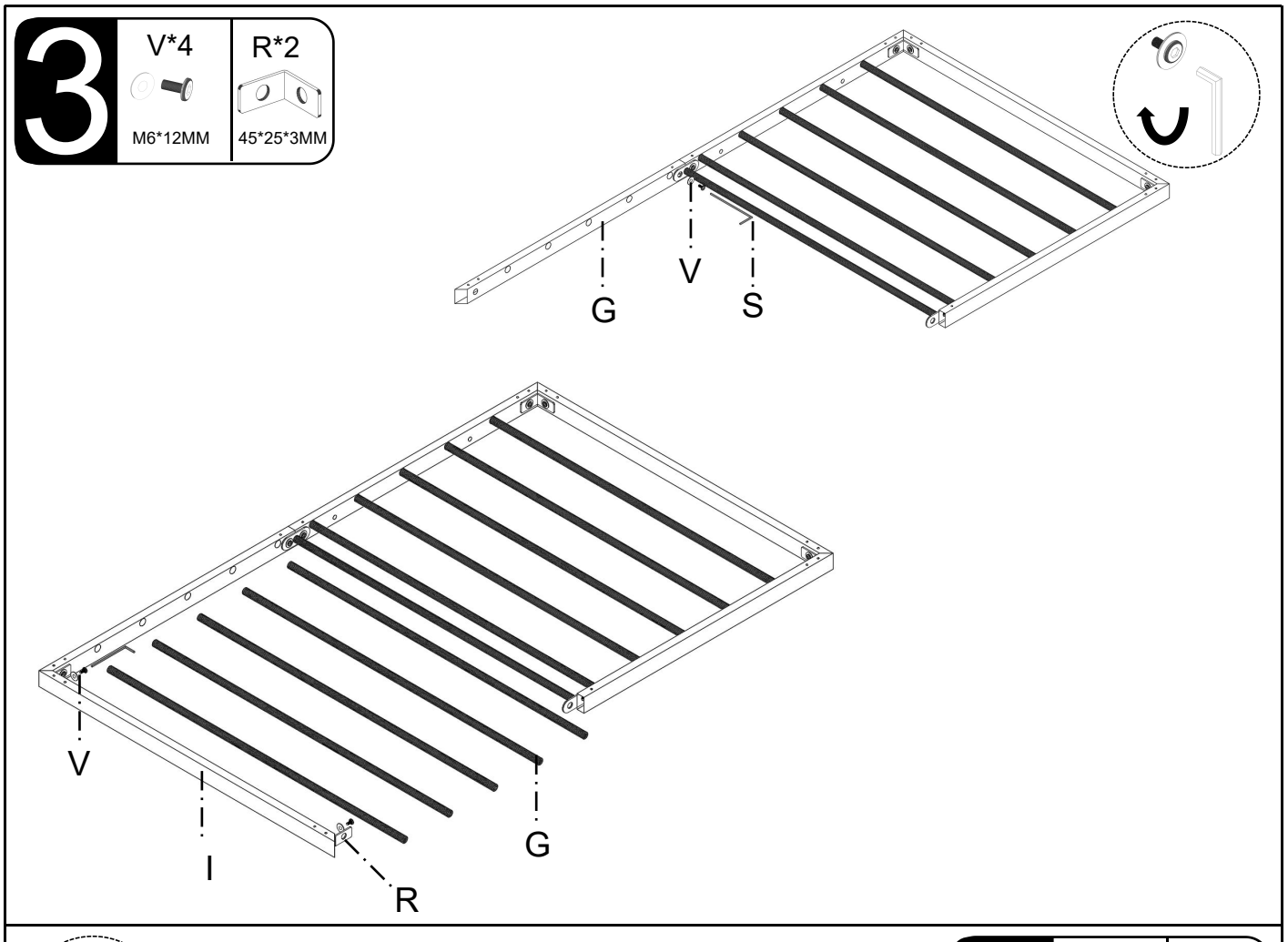
3
V*4
M6*12MM
R*2
45*25*3MM
G
V
S
V
I
R
G

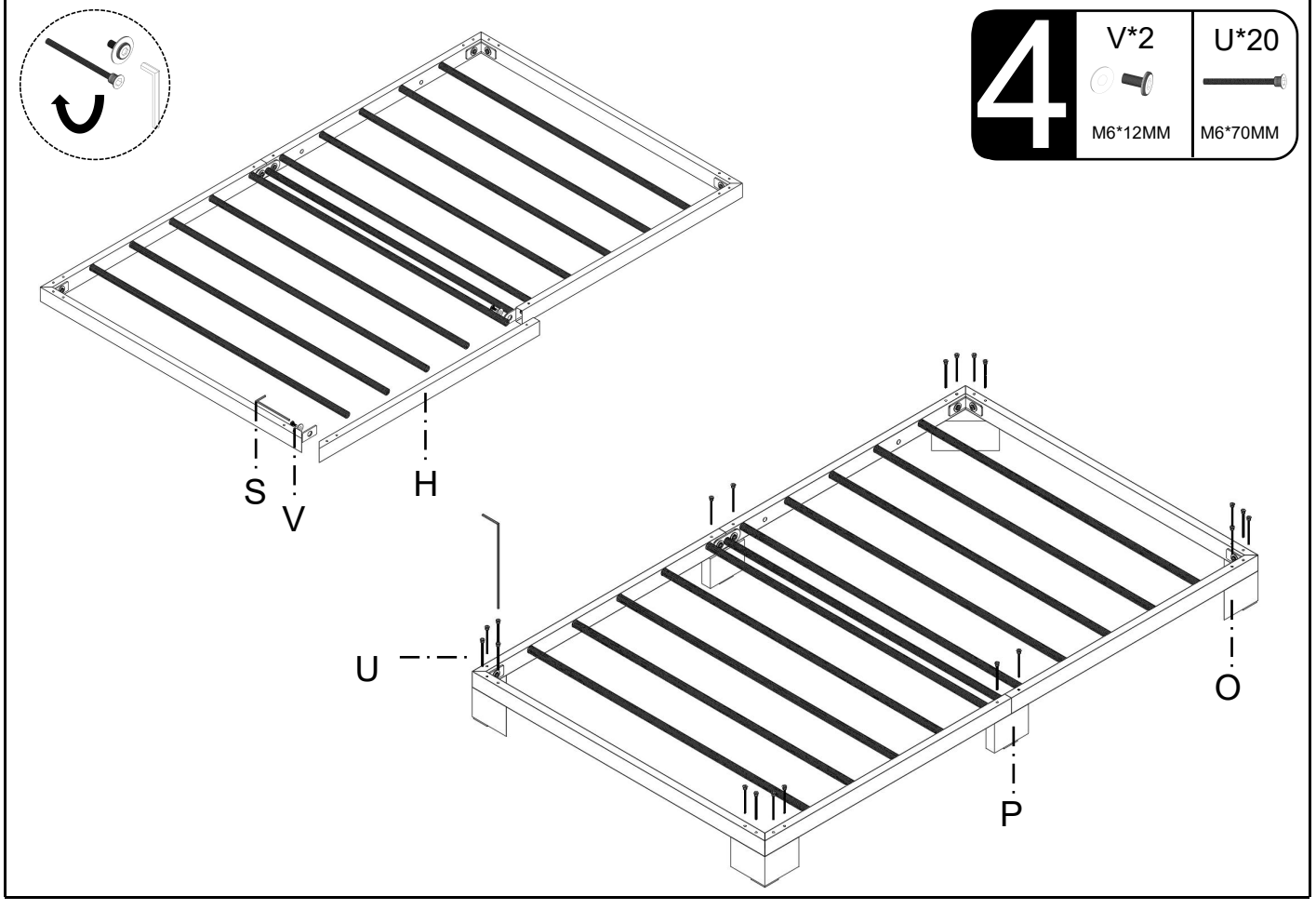
4
V*2
M6*12MM
U*20
M6*70MM
S
V
H
U
O
P

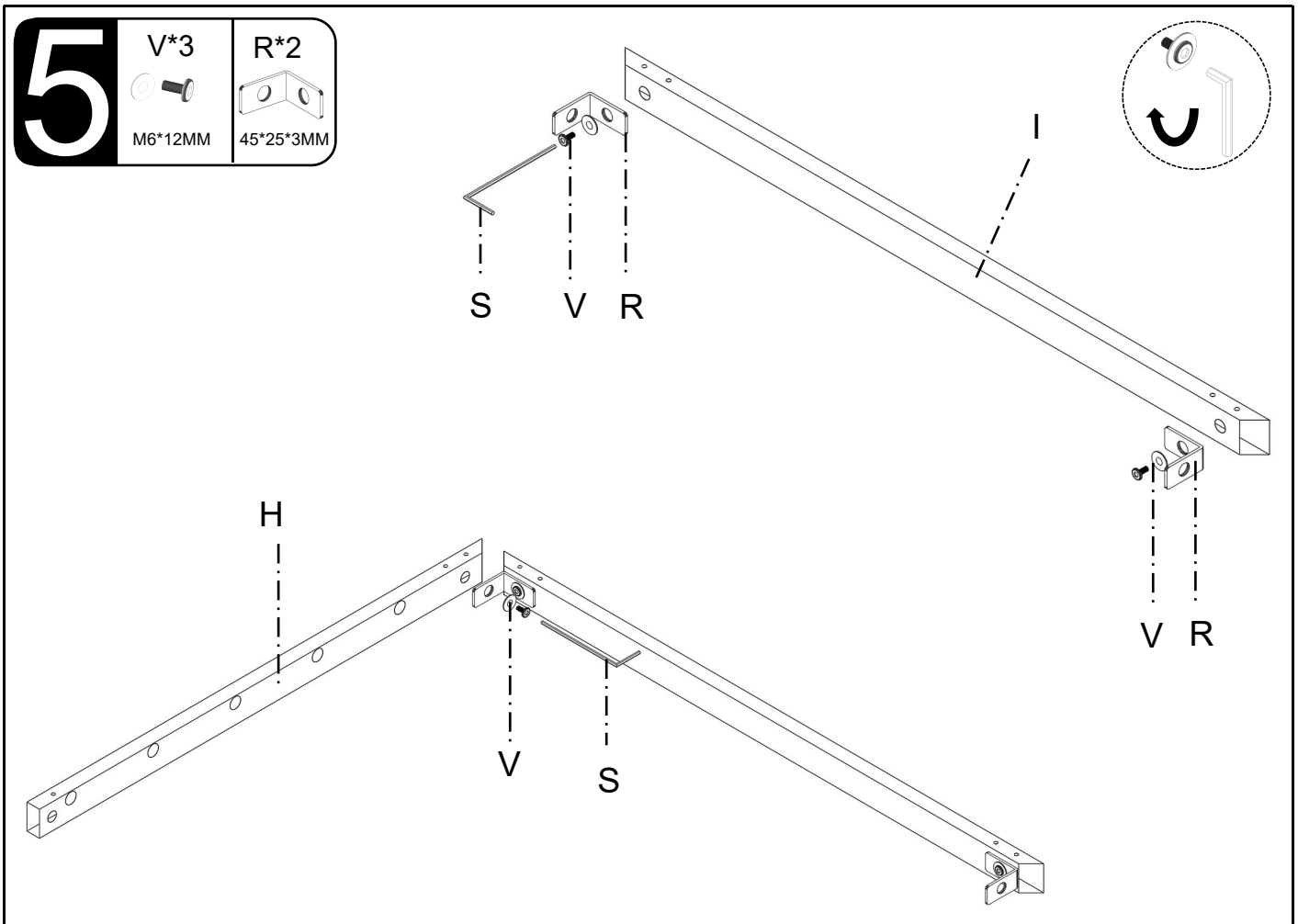
5
V*3
M6*12MM
R*2
45*25*3MM
S
V
R
I
V
R
H
V
S

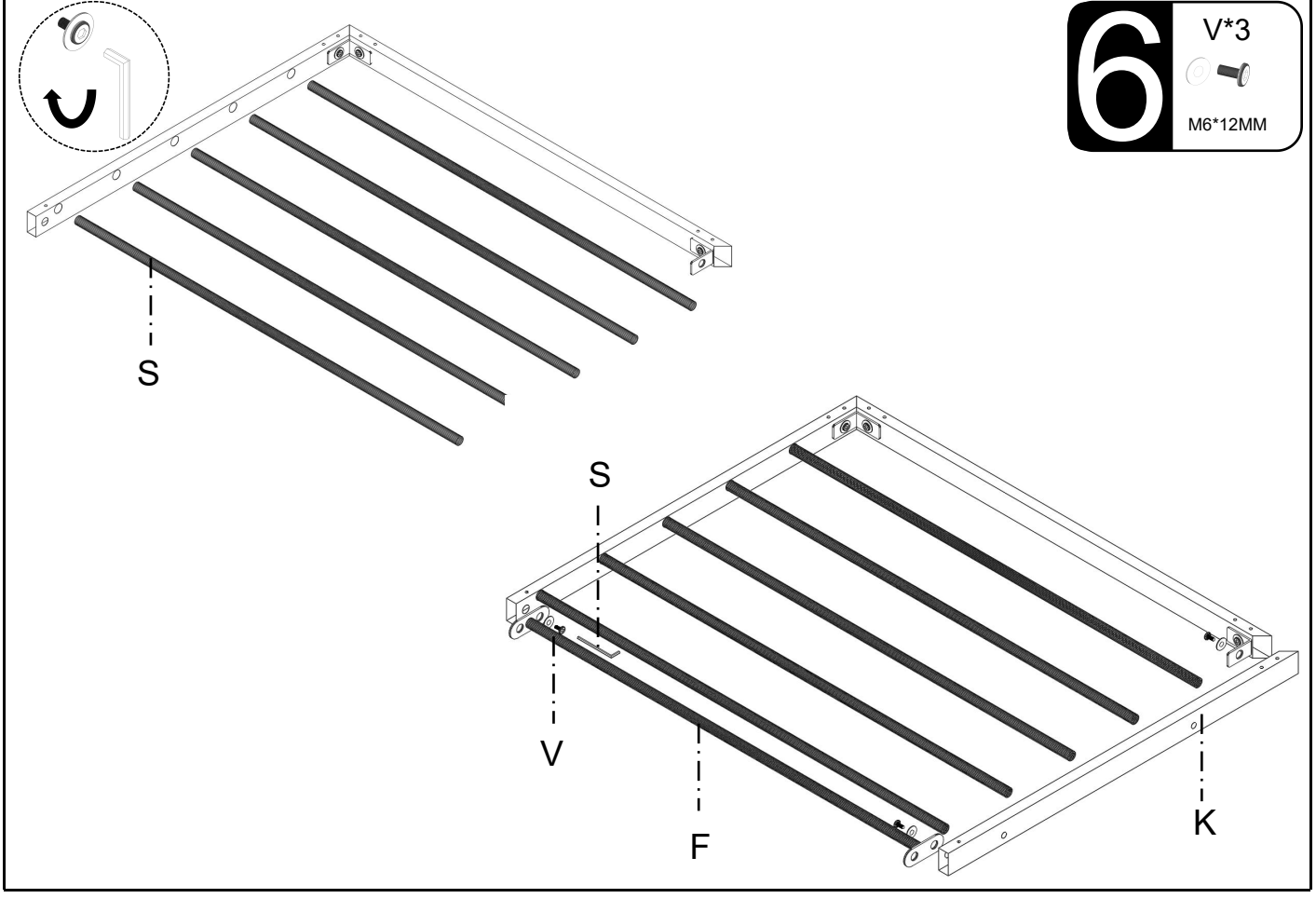
6
V*3
M6*12MM
S
S
V
F
K

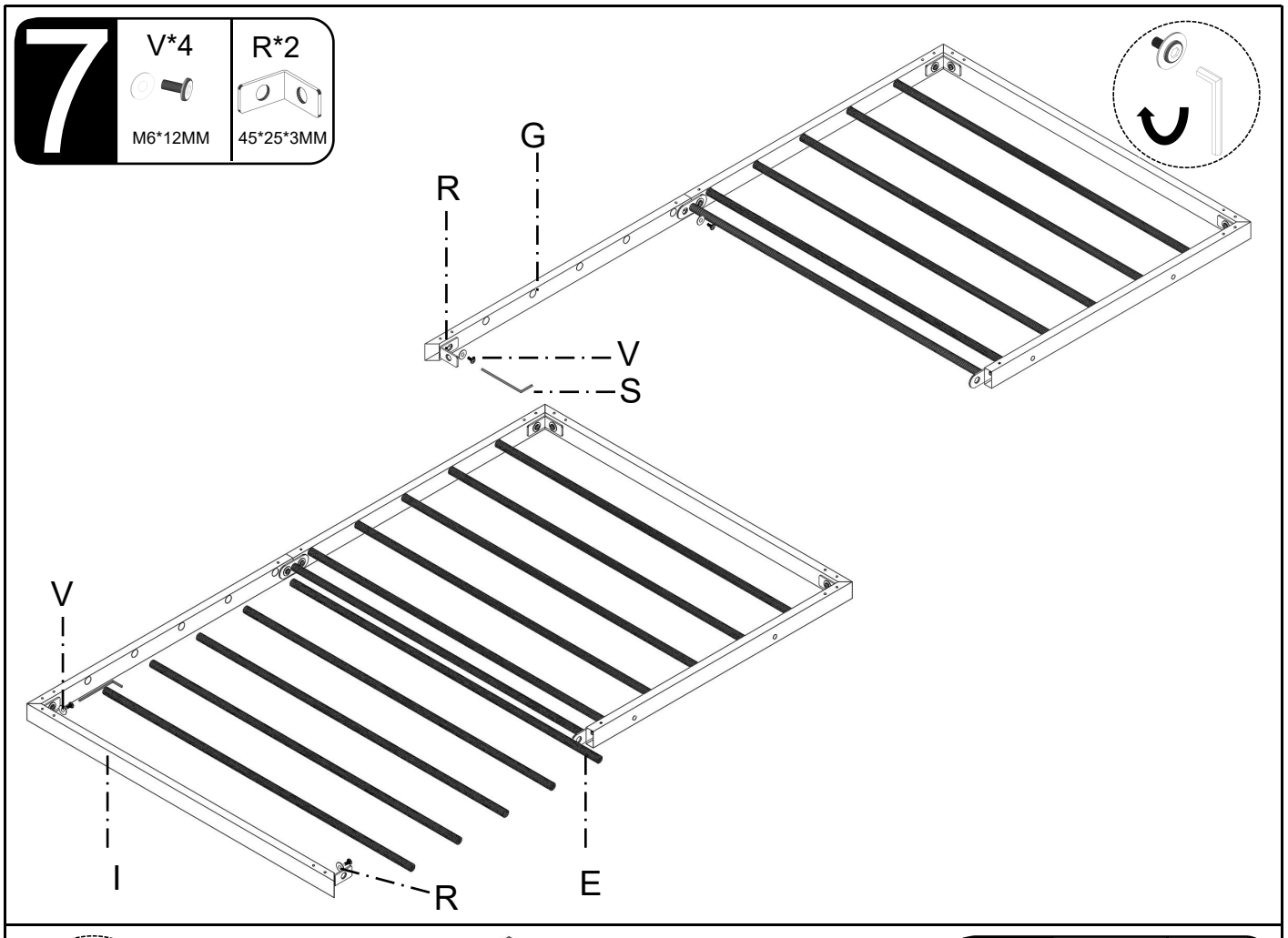
7
V*4
M6*12MM
R*2
45*25*3MM
G
R
V
S
V
I
R
E

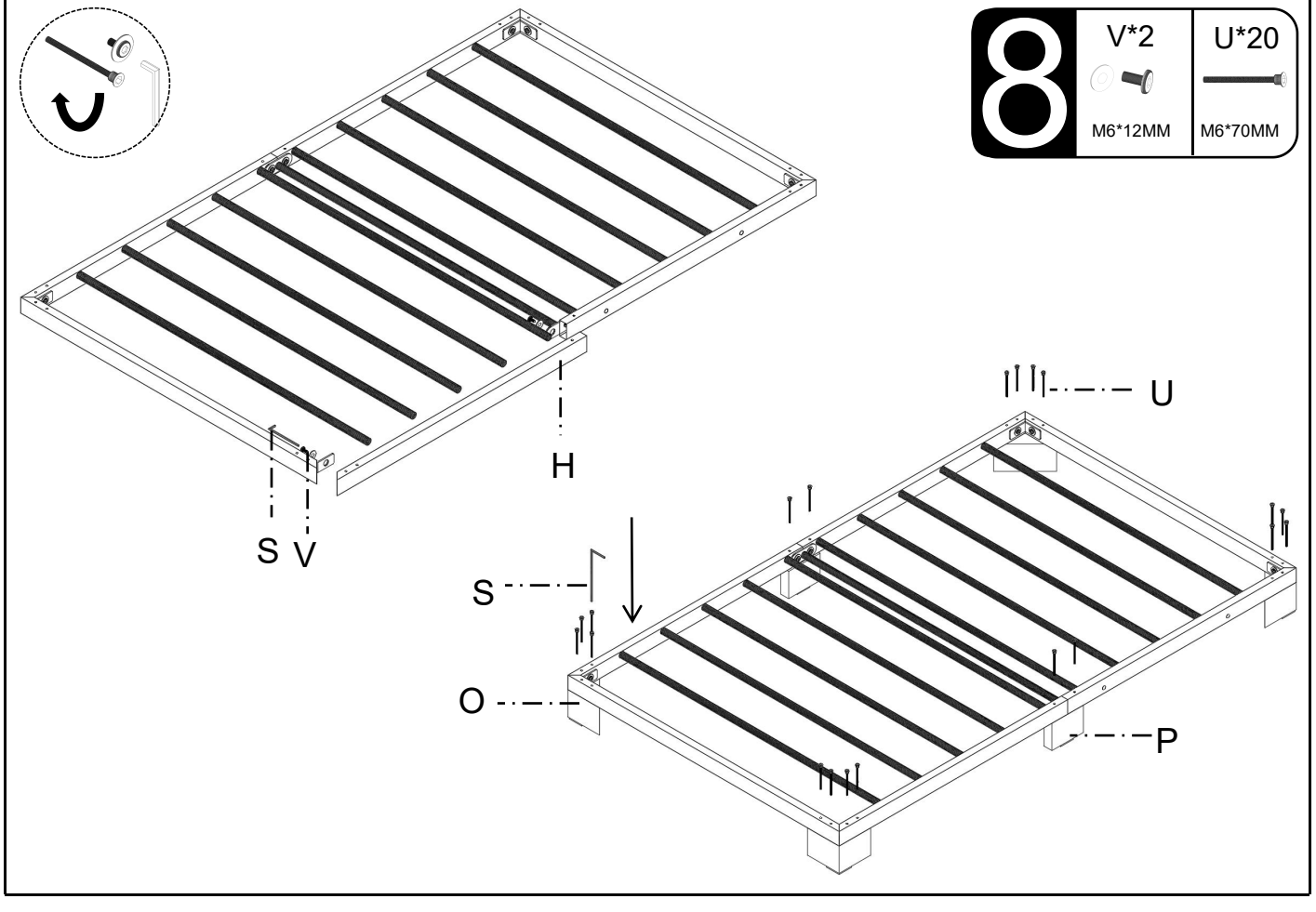
8
V*2
M6*12MM
U*20
M6*70MM
H
S
V
U
S
O
P

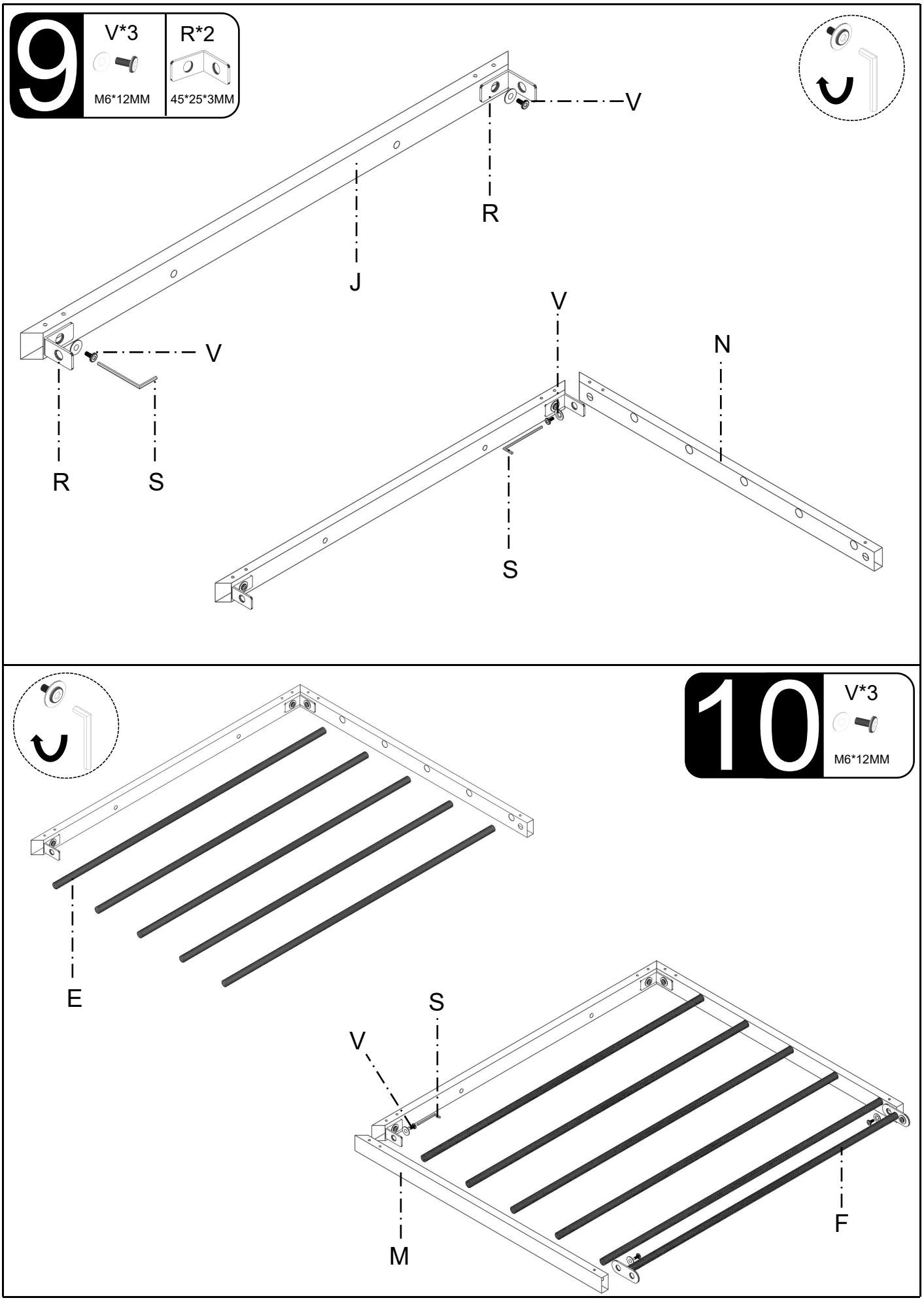
9
V*3
M6*12MM
R*2
45*25*3MM
V
R
J
V
R
S
V
N
S
10
V*3
M6*12MM
E
S
V
M
F

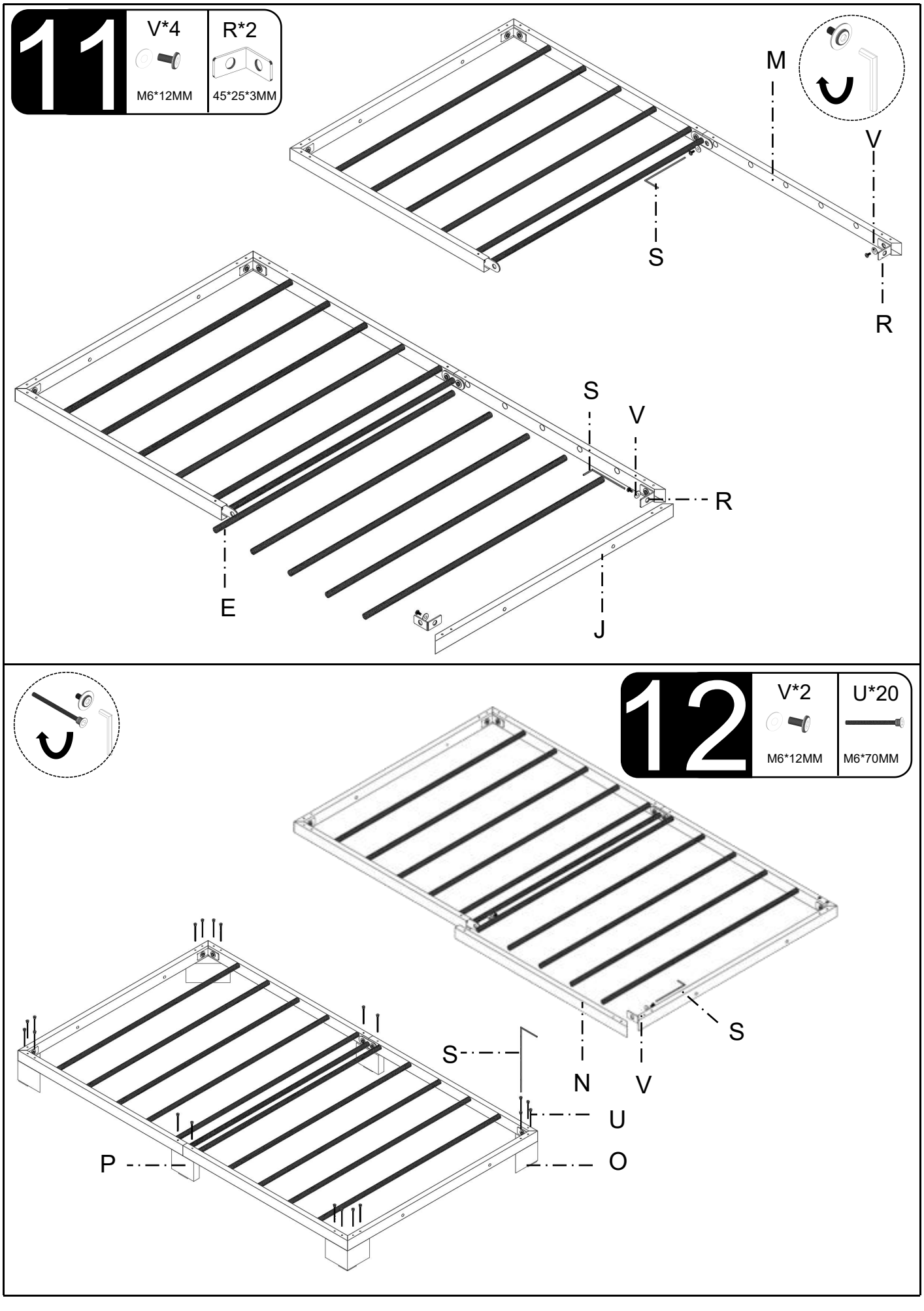
11
V*4
M6*12MM
R*2
45*25*3MM
M
V
S
R
S
V
R
E
J
12
V*2
M6*12MM
U*20
M6*70MM
S
N
V
S
U
P
O

13

Q*4



M6*70mm

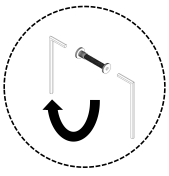

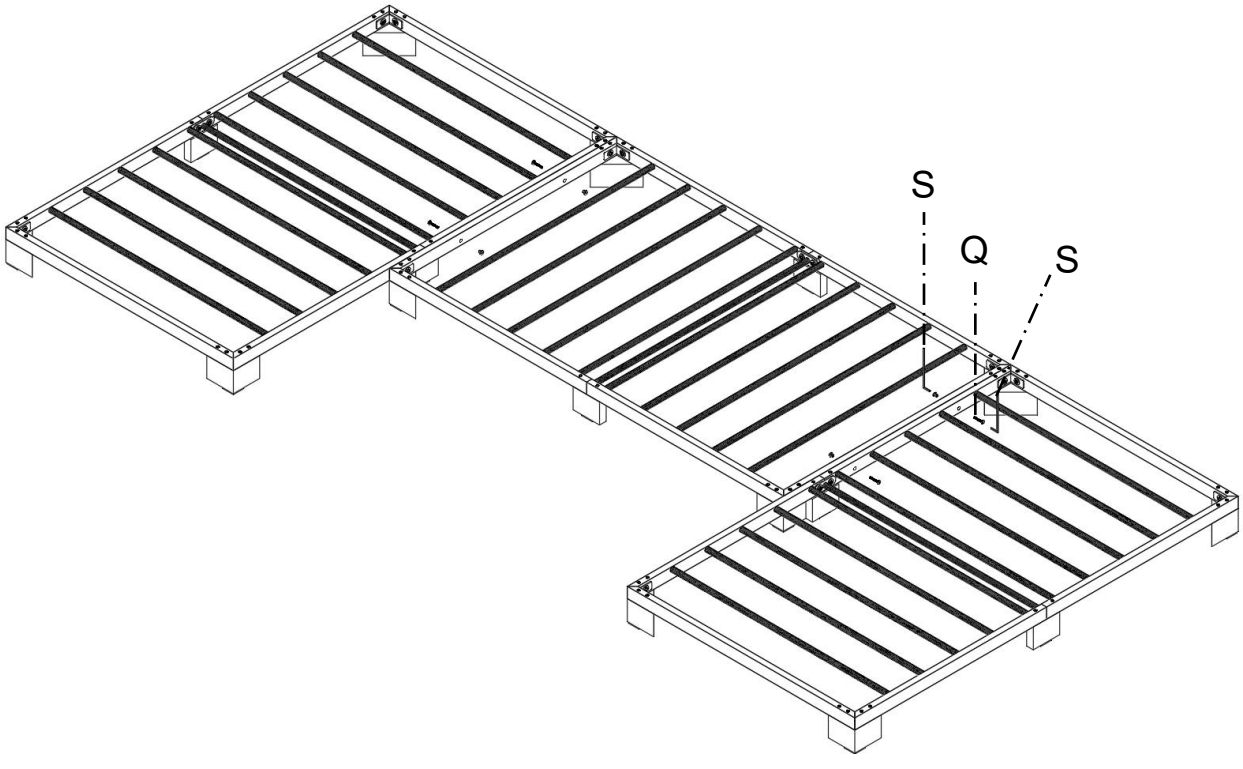

14

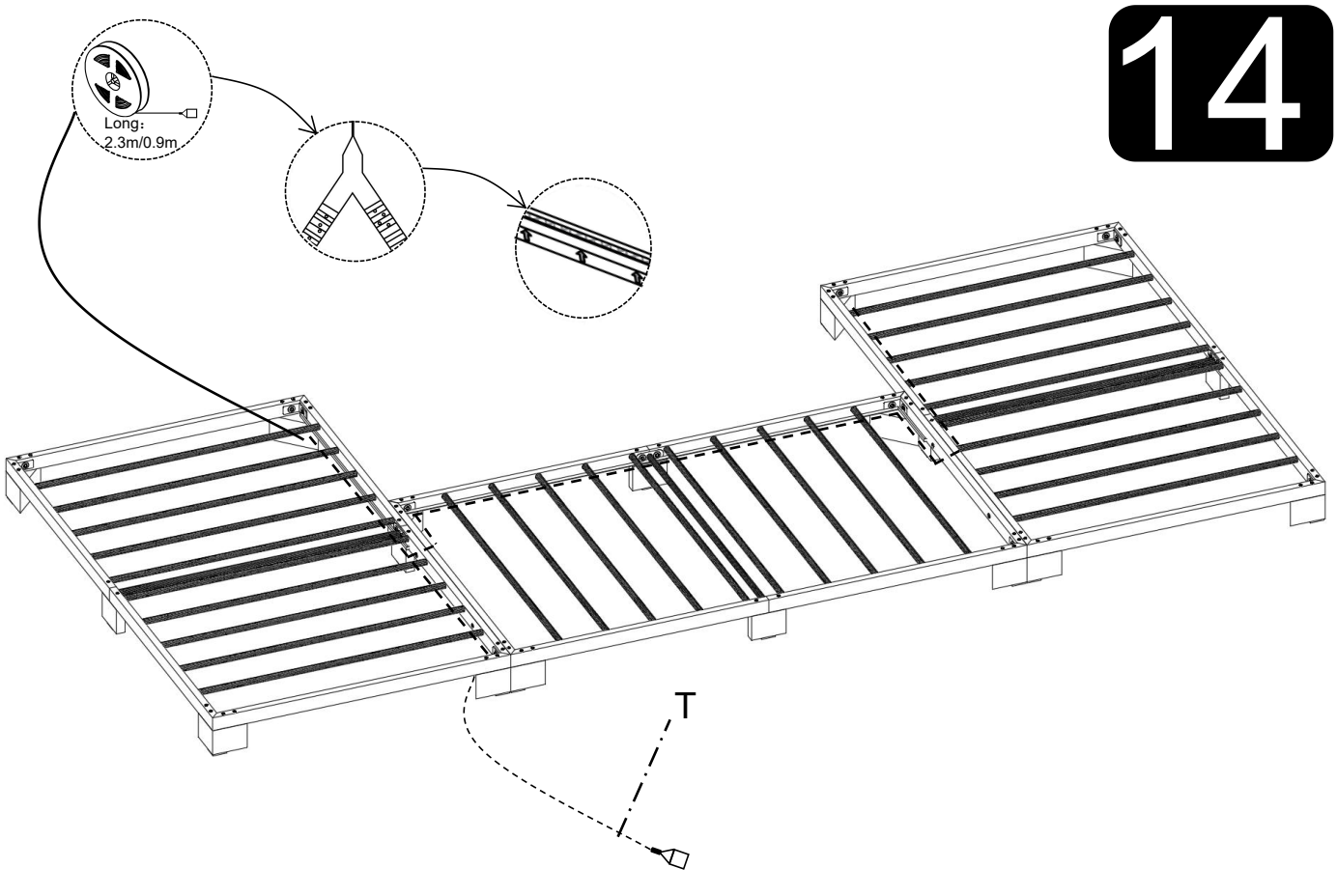

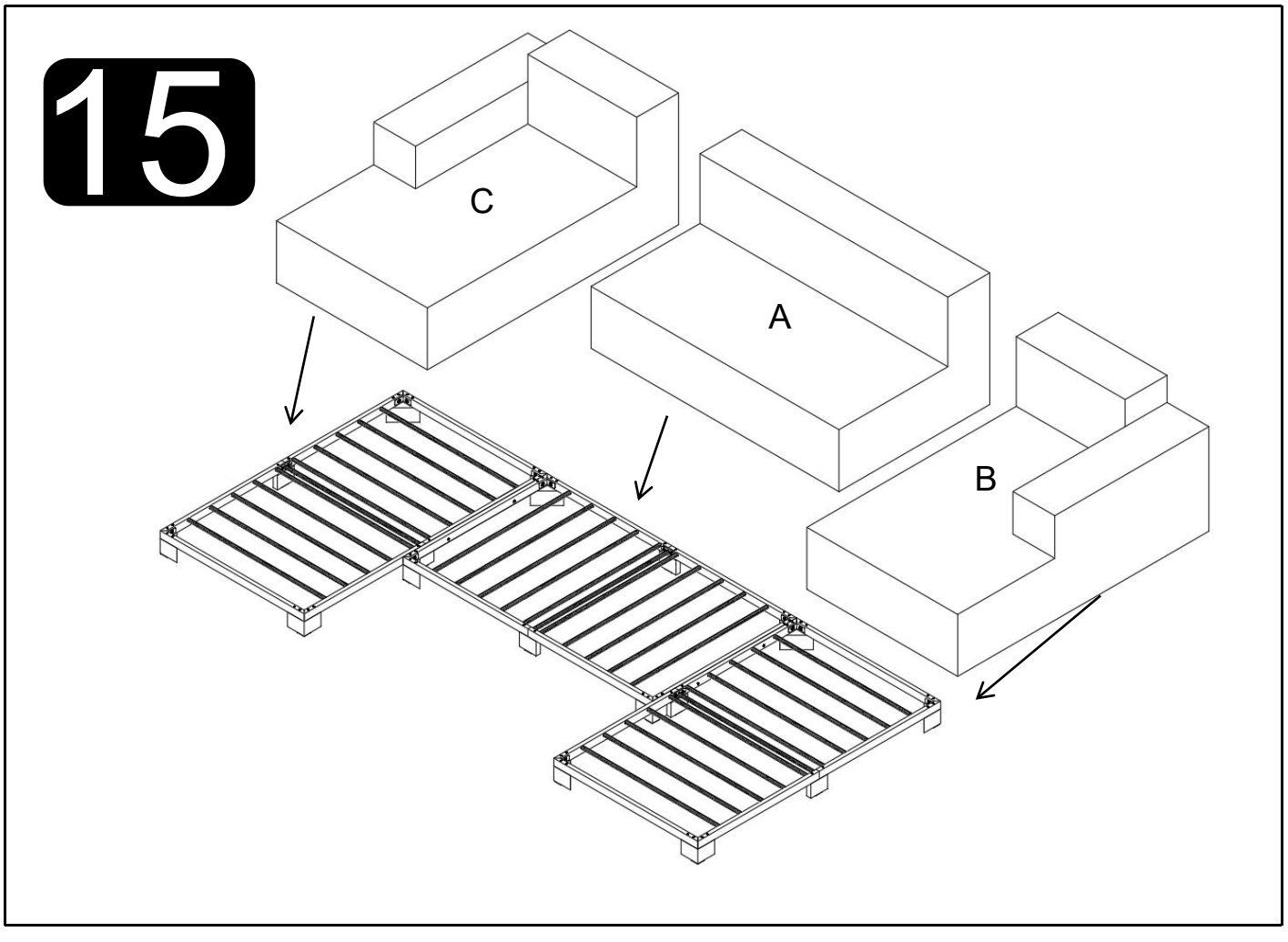
15
C
A
B

Helpful Hints

·Move your new furniture carefully, with two people lifting and carrying the unit to its new location.
·Your furniture can be disassembled and reassembled to move.
·Clean the product with a soft damp cloth. DO NOT use harsh chemicals or abrasive cleaners.

COMPLETED

