JAMIE YOUNG Co

CAROUSEL CHANDELIER

5CARO-CHNA

SAFETY, INSTALLATION & CARE INSTRUCTIONS

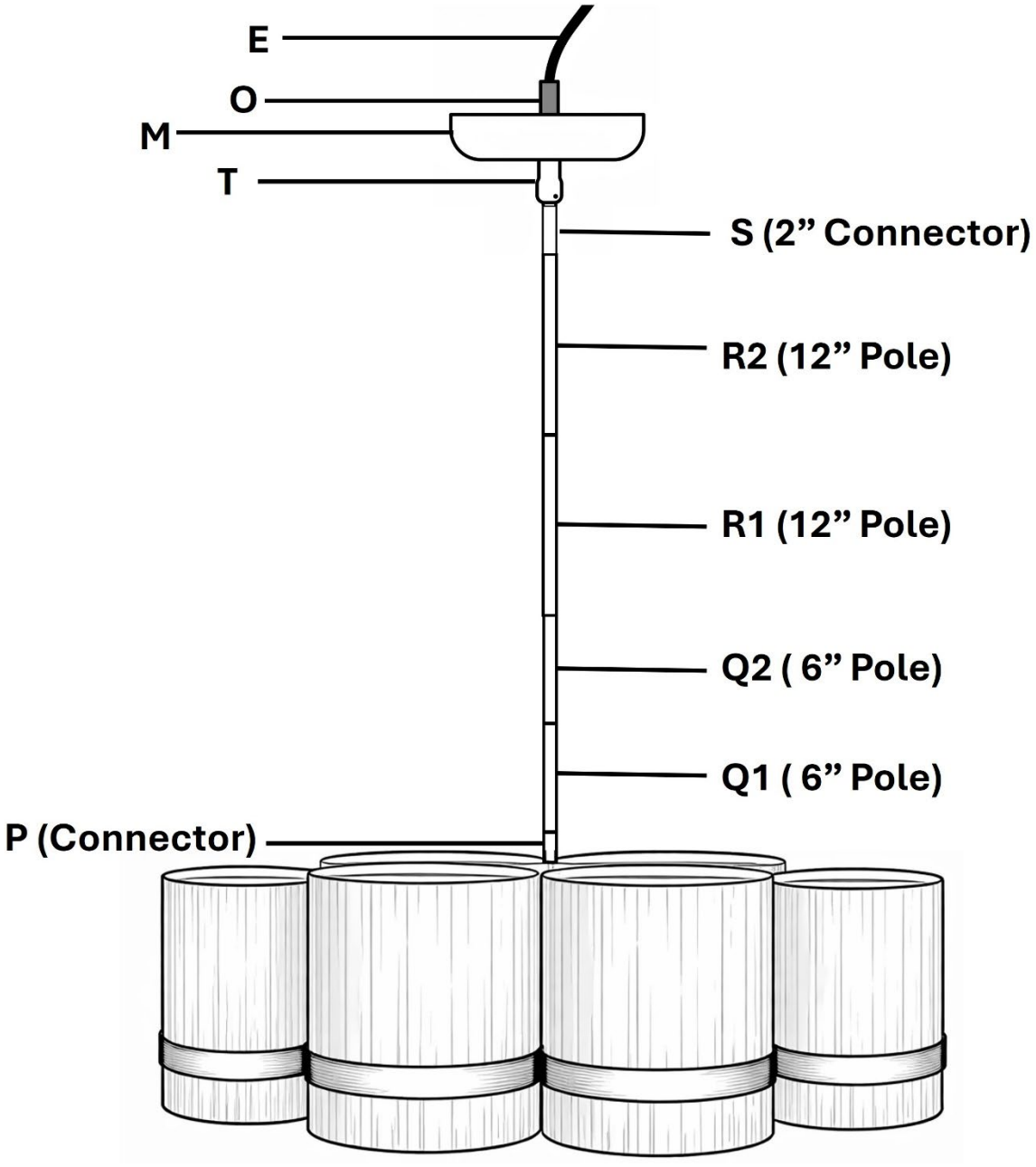

Fig.1

SAVE THESE INSTRUCTIONS

IMPORTANT SAFETY INSTRUCTIONS

READ THESE INSTRUCTIONS COMPLETELY BEFORE STARTING

We strongly recommend that all direct-wired lighting products be installed by a licensed electrician. Two people may be required for installation. DO NOT EXCEED the rated bulb wattage. Keep flammable materials away from bulb. This light fixture is shipped with all internal wiring intact. Do not open the product or alter the wiring in any manner.

Installation requires an electrical junction box in the ceiling sufficient to support the weight of the light fixture.

This fixture weighs: 10.00 Kgs / 22.00 lbs



Do not use the electric cord only (without poles) to support the weight of the lighting fixture.

For your safety, it is strongly recommended that two people install the lighting fixture.

WARNING: Be certain that the power to the electrical junction box is turned off at the Circuit breaker before installation. Turning the power off at a light switch is not Sufficient to prevent electrical shock.

CAUTION: Prior to installation, locate All INCLUDED PARTS before disposing of packaging materials.

Tools Required for Installation	
Screwdriver	Pliers
Electrical Tape	Wire Connectors
Wire Cutters	Adjustable Wrench

Parts not included but required	
A.	Ceiling Outlet Junction Box
B.	Ground Junction Box Wire
C.	Hot Junction Box Wire
D.	Neutral Junction Box Wire

Parts Included / Referenced (See Figure 1 & 3):			
E.	Pendant Cord	M.	Canopy
F.	Mounting Bracket	N.	Canopy Screws
G.	Mounting Screws	O.	Threaded Nipple
H.	Ground Screw	P.	Connector Fixed with product.
I.	Ground Wire	Q.	2 X 6 Inch Pole (Q1 & Q2)
J.	Hot Fixture Wire	R.	2 X 12 Inch Pole (R1 & R2)
K.	Neutral Fixture Wire	S.	2 Inch Connector Fixed with swirl.
L.	Wire Connectors	T.	Swirl

POLE INSTALLATION PROCEDURE (See Fig. 2):

Note**:** All poles have a threaded nipple on each end for easy connection. Rotate clockwise to tighten.

Step 1: Start from the Lamp Body

The 0.75-inch connector (P) is already fixed to the top of the lamp.

Step 2: Add the Two 6-inch Poles

Take a 6-inch pole (Q1) and screw it into the top of the 0.75-inch connector.

Then, screw the second 6-inch pole (Q2) into the first 6-inch pole.

Step 3: Add the Two 12-inch Poles

Screw a 12-inch pole (R1) into the top of the last 6-inch pole.

Then screw the second 12-inch pole (R2) into that.

Step 5: Attach the 2-inch Connector

Take 2-inch connector (S) + Swirl (T) + Canopy (M) (pre-attached together).

Screw the connector end into the top of the last 12-inch pole.

Final Checks Before Installation:

1. All pole joints should be hand-tightened (firm, not forced).
2. Ensure the pole is perfectly straight and that the swirl is centred.
3. You're now ready for ceiling mounting and wiring (follow product's electrical instructions).

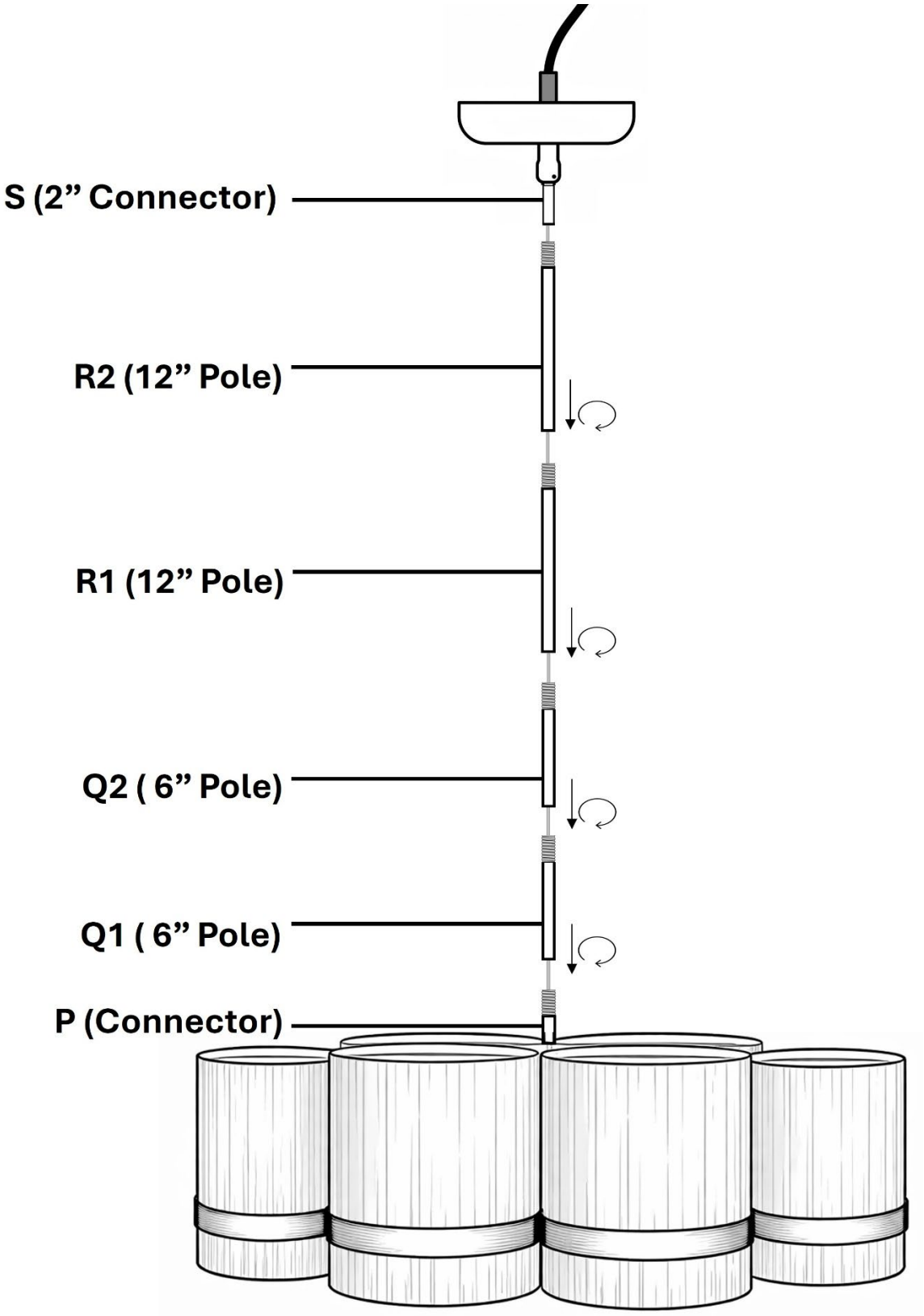

www.jamieyoung.com

Fig. 2

Installation Procedure (Refer to Fig. 3):

1. SHUT OFF THE MAIN ELECTRICAL SUPPLY FROM THE MAIN FUSE BOX/CIRCUIT BREAKER.
2. Carefully unpack all fixture parts and hardware and lay them out on a clean work surface
3. Adjust the fixture's power cord from the canopy (M) based on the ceiling outlet junction box.
4. If needed, cut off any extra length of wire cord cable (E). When cutting the power cord, be sure to cut it so that it is at least 6" (152.4mm) long inside the Ceiling Outlet Junction Box (A). To prepare the cut power cord for installation process, use wire strippers to prepare the ends of the two wires so that there is about 1/2" of exposed wire for the Plastic Wire Connectors (L).
5. Gently pull existing Ground Wire (B), Hot (C), and Neutral (D) Junction Box Wires down from the Ceiling Junction Box (A) and allow them to hang.
6. Carefully inspect the chandelier's fixture wires. The Neutral Fixture Wire (K) is White. The Hot Fixture Wire (J) is Black, and the Ground Wire (I) is Green.
7. Attach the Ground Wire (I) from the fixture to the Ground Junction Box Wire (B); It usually has green insulation around it or is bare wire. Fasten them together with a plastic wire Connector (L) and wrap the connection with electrical tape. Make sure that no wire strands area exposed. If your Wall Outlet Junction Box (A) does not have a Ground Junction Box Wire (B), insert the Ground Screw (H) into the Mounting Bracket (F) where it's marked "Ground", and wrap the fixture's Green Ground wire around the Ground Screw (H). Tighten the screw to clamp the Ground Junction Box Wire (B) between the Ground Screw (H) head and the Mounting Bracket (F). It is imperative that the Wall Junction Box (A) in your home be properly grounded.

8. Connect the Neutral Fixture Wire (K) to the Neutral Junction Box Wire (D); it usually has white insulation around it. Fasten them together with a plastic wire Connector (L) and wrap the connection with electrical tape. Make sure that no wire strands area exposed.
9. Connect the Hot Fixture Wire (J) to Hot Junction Box Wire (C); it usually has black insulation around it. Fasten them together with a plastic wire Connector (L) and wrap the connection with electrical tape. Make sure that no wire strands area exposed. Do not reverse the hot and neutral connections or safety will be compromised.
10. Gently tuck the wire connections neatly into the Ceiling Outlet Junction Box (A).
11. Attach the Mounting Bracket (F) to the Ceiling Outlet Junction Box (A) using the Mounting Screws (G). Tighten screws with a screwdriver until secure.
12. Slide the Canopy up with cord and fix the Nipple (P) into the centre hole of Bracket (F)
13. Secure the canopy (M) to the ceiling by screwing the decorative screws (N) into canopy and bracket.
14. Insert Four (4) 40W- Candelabra Base (E-12) Lightbulbs (not included). Do not exceed the specified wattage.
15. Restore power to Ceiling Outlet Junction Box (A) and test the fixture.

CARE AND CLEANING

1. To clean, wipe the light fixture ONLY with a soft, dry cloth.
2. Always avoid the use of harsh chemicals or abrasive cleaners as they may cause damage to the fixture's finish.

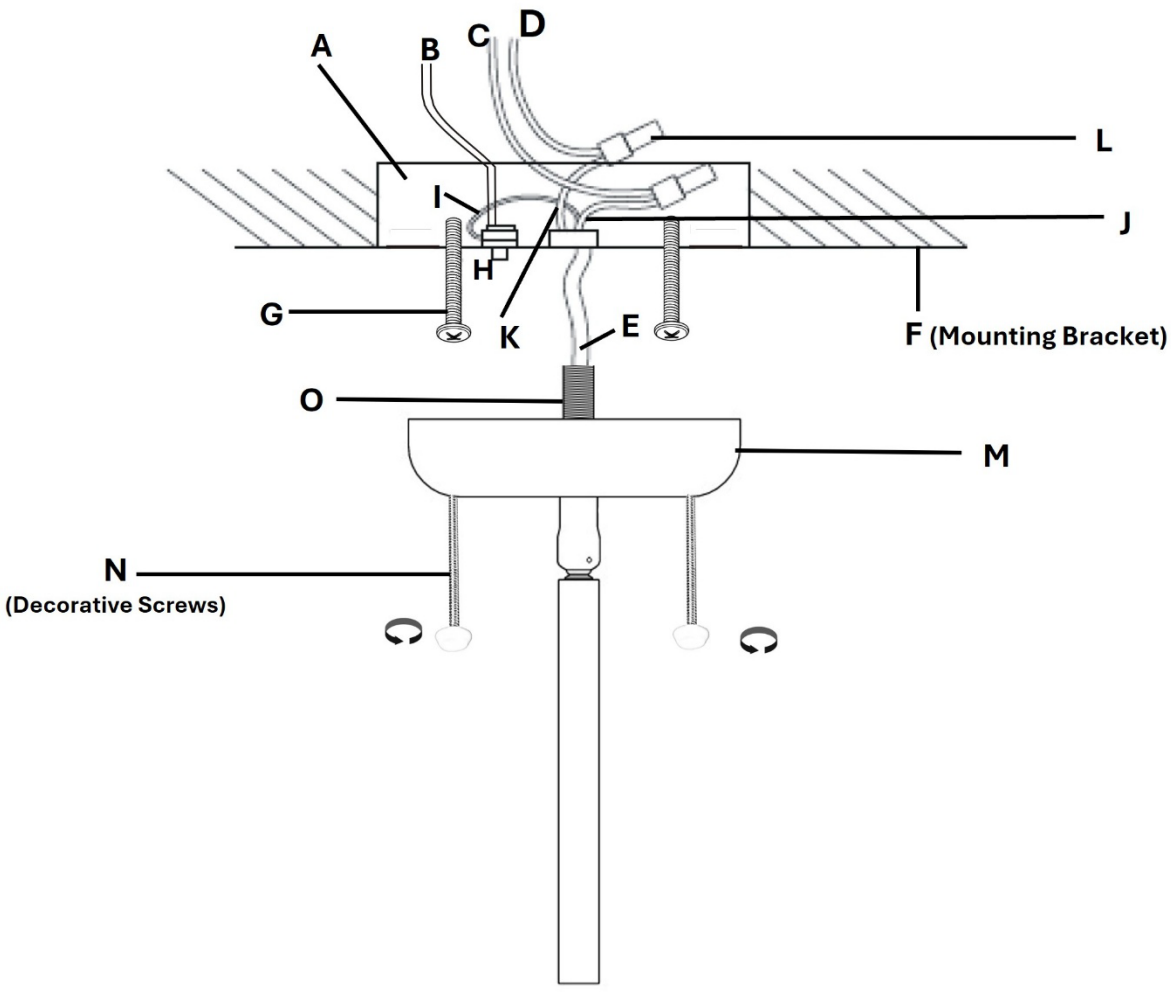

Fig. 3